Surname	Centre Number	Candidate Number
First name(s)		0

GCSE

3310U20-1

A23-3310U20-1

THURSDAY, 9 NOVEMBER 2023 – MORNING

MATHEMATICS – NUMERACY
UNIT 2: CALCULATOR-ALLOWED
FOUNDATION TIER

1 hour 30 minutes

ADDITIONAL MATERIALS

A calculator will be required for this examination.

A ruler, a protractor and a pair of compasses may be required.

INSTRUCTIONS TO CANDIDATES

Use black ink or black ball-point pen. Do not use gel pen or correction fluid.

You may use a pencil for graphs and diagrams only.

Write your name, centre number and candidate number in the spaces at the top of this page.

Answer **all** questions.

Write your answers in the spaces provided in this booklet. If you run out of space, use the additional page(s) at the back of the booklet, taking care to number the question(s) correctly.

Take π as 3·14 or use the π button on your calculator.

INFORMATION FOR CANDIDATES

You should give details of your method of solution when appropriate.

Unless stated, diagrams are not drawn to scale.

Scale drawing solutions will not be acceptable where you are asked to calculate.

The number of marks is given in brackets at the end of each question or part-question.

In question **2**(b), the assessment will take into account the quality of your linguistic and mathematical organisation, communication and accuracy in writing.

For Examiner's use only		
Question	**Maximum Mark**	**Mark Awarded**
1.	**4**	
2.	**11**	
3.	**9**	
4.	**3**	
5.	**4**	
6.	**7**	
7.	**5**	
8.	**4**	
9.	**8**	
10.	**6**	
11.	**4**	
Total	**65**	

3310U201
01

NOV233310U20101

© WJEC CBAC Ltd.

Formula List – Foundation Tier

Area of trapezium $= \frac{1}{2}(a + b)h$

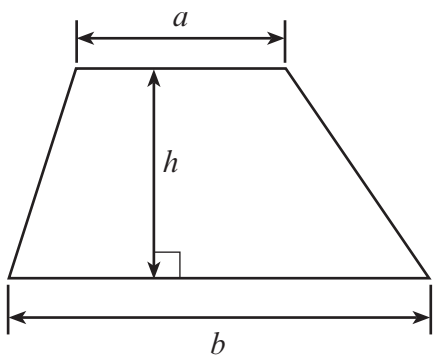

© WJEC CBAC Ltd.

Examiner only

1. Glen is trying to keep fit.

Glen works every day from Monday to Friday.
He sets himself two targets for these days.
The targets are to walk:

- at least 10 000 steps **every day** from Monday to Friday
- at least 50 000 steps **in total** from Monday to Friday.

He records the number of steps he takes each day from Monday to Friday.

Day	Number of steps
Monday	10 672
Tuesday	13 586
Wednesday	12 341
Thursday	11 932
Friday	9754

(a) Has Glen achieved his target to walk at least 10 000 steps **every day**?
Give a reason for your answer. [1]

Yes ☐ No ☐

.....

.....

.....

(b) Glen's second target was to walk at least 50 000 steps from Monday to Friday.
By how many steps did he beat this target? [2]

.....

.....

.....

(c) Approximately how many steps did Glen walk on Tuesday?
Give your answer correct to the nearest 100. [1]

.....

3310U201
03

© WJEC CBAC Ltd.

Examiner only

2. Jamil works in Cardiff from Monday to Friday.

(a) He travels by train from Bridgend to Cardiff and back each day.

The table below shows the times of the trains from Bridgend to Cardiff.

Departs at **07:43** **Bridgend** [BGN]	Arrives **08:08** **Cardiff Central** [CDF]
Departs at **07:53** **Bridgend** [BGN]	Arrives **08:13** **Cardiff Central** [CDF]
Departs at **08:22** **Bridgend** [BGN]	Arrives **08:47** **Cardiff Central** [CDF]
Departs at **08:26** **Bridgend** [BGN]	Arrives **08:54** **Cardiff Central** [CDF]

(i) On a Tuesday, Jamil must be at work by 9 a.m. for a meeting.
His office is a 10-minute walk from the station.

What is the latest train that Jamil could catch from Bridgend to be on time for the meeting? [2]

.....

.....

(ii) Using the information in the table above, complete the following sentence. [3]

The train that departs from Bridgend at ..... takes the **longest** time to travel to Cardiff.

This train takes ..... minutes to travel from Bridgend to Cardiff.

.....

.....

.....

.....

© WJEC CBAC Ltd.

Examiner only

(b) *In this part of the question, you will be assessed on the quality of your organisation, communication and accuracy in writing.*

Jamil buys his lunch on his way to work every day from Monday to Friday.
Each day, he buys a sandwich, an orange juice and a bag of crisps.

Caz's Café

Any sandwich £2.49
Orange juice 95p
Bag of crisps 80p

Simon's Sandwiches

£3.50 Meal Deal

Any sandwich, drink
& bag of crisps

Last week, Jamil bought his lunch from Caz's Café every day from Monday to Friday.
This week, he plans to buy his lunch from Simon's Sandwiches every day from Monday to Friday.

In total, **how much less** will Jamil pay for his lunches this week than he paid last week?
You must show all your working. [4 + 2 OCW]

.....

.....

.....

.....

.....

.....

.....

.....

.....

.....

.....

.....

3310U201
05

© WJEC CBAC Ltd.

Examiner only

3. Siân belongs to a local running club.

(a) One weekend, Siân plans to run along some local paths.
- On Saturday, she plans to run from Aber to Cwm.
- On Sunday, she plans to run from Aber to Borth and then to Dinas.

Siân wants to work out the total distance for each run before she starts.

Siân uses the map below.
The scale of the map is 1 cm represents 0·5 miles.

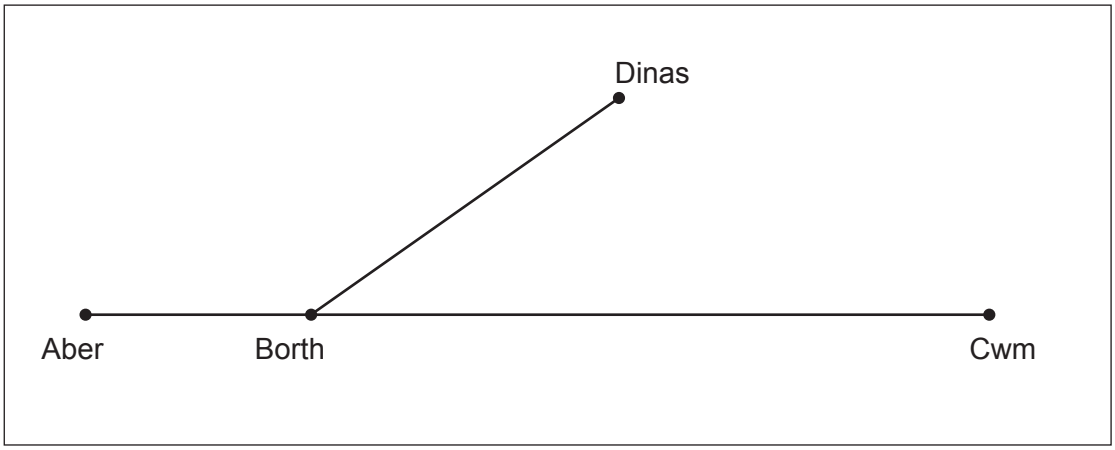

Scale: 1 cm represents 0·5 miles

(i) How many miles is it from Aber to Cwm? [2]

.....

.....

.....

(ii) How many miles is it from Aber to Borth and then to Dinas? [2]

.....

.....

.....

© WJEC CBAC Ltd.

Examiner only

(b) Siân trains at her local rugby pitch, which is shown below.
Siân runs complete laps around the outside of the pitch.

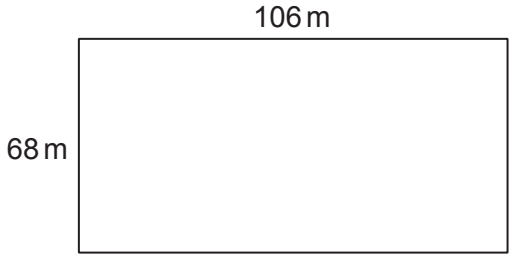

Diagram not drawn to scale

Siân wants to run at least 5000 m.

What is the smallest number of complete laps that Siân needs to run?
You must show all your working. [5]

.....

.....

.....

.....

.....

.....

3310U201
07

© WJEC CBAC Ltd.

Examiner only

4. Alys is buying a pair of shoes online from a company in Italy.
The shoes are labelled with European sizes.
Alys uses the rules below to calculate her European shoe size.

Alys measures the length of her foot as 22·5 cm.

Length of foot in centimetres → ÷ 2·5 → Length of foot in inches

Length of foot in inches → × 3·75 → + 2·25 → European shoe size

Alys thinks that she will be a European shoe size 37.

Is Alys correct?

Give a reason for your answer. [3]

Yes ☐ No ☐

.....

.....

.....

.....

.....

.....

© WJEC CBAC Ltd.

Examiner only

5. Ellie owns her own business selling candles.

The candles she sells have the following masses:

Large candle	Medium candle	Small candle
1000 g	600 g	175 g

Ellie sends candles in boxes to her customers.
She uses the following table to calculate the cost of postage.

	Type of postage			
Mass up to and including	Standard		Signed	
	1st class	2nd class	1st class	2nd class
1 kg	£6.00	£5.30	£7.00	£6.30
2 kg	£9.02	£5.30	£10.02	£6.30
5 kg	£15.85	£8.99	£16.85	£9.99
10 kg	£21.90	£20.25	£22.90	£21.25

A customer orders 3 large candles, 2 medium candles and 4 small candles.

Ellie packs these candles in a box.
The mass of the empty box and packaging is 280 g.

Ellie sends the parcel '**Signed**' and '**1st class**'.

Calculate the cost of sending the parcel.
You must show all your working. [4]

.....

.....

.....

.....

.....

.....

3310U201
09

© WJEC CBAC Ltd.

Examiner only

6. Miss Jardon's electricity bill is shown below.
Complete the bill to find the total amount that Miss Jardon owes. [7]

Miss Jardon
34 Heol Ysbyty

Period	Previous meter reading	Present meter reading	Number of units of electricity used
July, August and September 2023	68 928	69 658	.....

Charge for electricity: ..... units at **£0.19 per unit**	£ .....
Standing charge: 3 months at **£6.50 per month**	£ .....
Total charges:	£ .....

VAT at 5%:	£ .....

Amount due to pay £ .....

.....

.....

.....

.....

.....

© WJEC CBAC Ltd.

Examiner only

7. A report from a Saturday newspaper is shown below.

> **Mean rainfall for the last 5 days is 42 mm**
>
> Mid Wales had significant rainfall over the last 5 days.
> 40 mm of rain fell on Monday, 37 mm on Tuesday and 39 mm on Wednesday.
> Thursday was the wettest day, when 48 mm of rain fell.
> Rain fell again on Friday.
> The mean rainfall per day for these 5 days was 42 mm.

(a) Calculate the rainfall for Friday.
You must show all your working. [3]

.....

.....

.....

.....

.....

.....

.....

.....

Rainfall on Friday was ..... mm

(b) It did not rain on Saturday or Sunday in this week.
Calculate the mean rainfall per day for the week. [2]

.....

.....

.....

.....

Mean rainfall per day for the week is ..... mm

© WJEC CBAC Ltd.

Examiner only

8. Elwyn ordered a solid garden ornament.

The ornament arrives in a box in the shape of a cuboid.
The box has length 15 cm, width 15 cm and height 30 cm.

The box only contains the ornament and packing.
The packing fits around the ornament and fills **all** the other space in the box.
When Elwyn opens the box, he is surprised at the volume of the packing in the box.
He says,

"$\frac{2}{3}$ of this box is filled with packing."

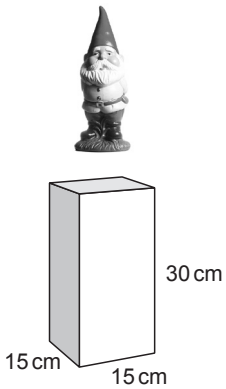

Diagram not drawn to scale

Use this information to calculate the volume of the garden ornament.
You must show all your working. [4]

.....

.....

.....

.....

.....

.....

.....

.....

© WJEC CBAC Ltd.

Examiner only

9. (a) Maggie sees a Bluetooth speaker in a sale.

The price of the speaker is reduced by 18% in the sale.
The original price of the speaker was £45.

Maggie's mum says she will share the cost of buying this speaker.
The ratio of the amount Maggie's mum pays to the amount Maggie pays is 8 : 1.

Calculate the amount Maggie's mum will pay towards buying this speaker in the sale.
You must show all your working. [4]

.....

.....

.....

.....

.....

.....

.....

.....

© WJEC CBAC Ltd.

Examiner only

(b) The diagram below shows a flowerbed at Maggie's house.
Maggie's mum will pay her £2.50 per m^2 to weed the flowerbed.

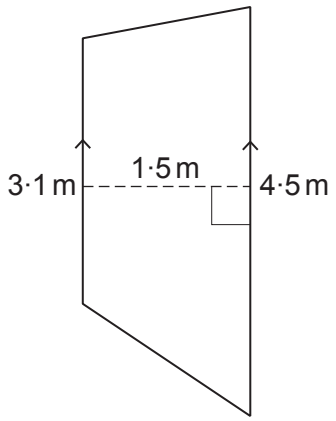

Diagram not drawn to scale

Calculate how much Maggie will get paid for the weeding. [4]

.....

.....

.....

.....

.....

.....

© WJEC CBAC Ltd.

Examiner only

10. Treviso is a company that designs and builds bicycles.

(a) Treviso has designed this new bike frame.
The missing angles need to be calculated.

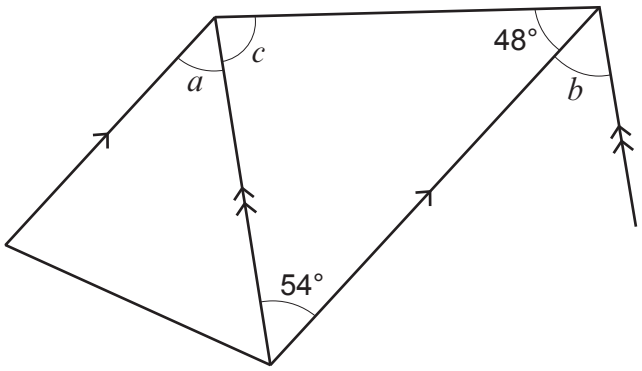

Diagram not drawn to scale

Find the size of each of the angles a, b and c. [3]

.....

.....

a = ... ° b = ... ° c = ... °

(b) Each wheel on Treviso's new bike has a diameter of 29 inches.

Remember:	12 inches ≈ 30 cm

What is the diameter of each wheel in **millimetres**? [3]

.....

.....

.....

.....

.....

Diameter is ..... mm

© WJEC CBAC Ltd.

Examiner only

11. Jac is planning to visit the Empire State Building in New York.

(a) According to the internet, the Empire State Building has a total of 1172 miles of elevator cable.

Complete the following statement. [2]

There is a total of ..... **km** of elevator cable in the Empire State Building.

.....

.....

.....

(b) The elevators in the Empire State Building were designed to move at a rate of 0·366 kilometres per minute.

Complete the following statement. [2]

The elevators in the Empire State Building were designed to move

at ..... **metres per second**.

.....

.....

.....

.....

END OF PAPER

© WJEC CBAC Ltd.

Question number	Additional page, if required. Write the question number(s) in the left-hand margin.

Examiner only

© WJEC CBAC Ltd.

Question number	Additional page, if required. Write the question number(s) in the left-hand margin.	Examiner only

© WJEC CBAC Ltd.

BLANK PAGE

PLEASE DO NOT WRITE ON THIS PAGE

© WJEC CBAC Ltd.

BLANK PAGE

PLEASE DO NOT WRITE ON THIS PAGE

© WJEC CBAC Ltd.