Surname	Centre Number	Candidate Number
First name(s)		0

GCSE

3310U60-1

A22-3310U60-1

THURSDAY, 10 NOVEMBER 2022 – MORNING

MATHEMATICS – NUMERACY

UNIT 2: CALCULATOR-ALLOWED HIGHER TIER

1 hour 45 minutes

ADDITIONAL MATERIALS

A calculator will be required for this examination.

A ruler, a protractor and a pair of compasses may be required.

INSTRUCTIONS TO CANDIDATES

Use black ink or black ball-point pen. Do not use gel pen or correction fluid.

You may use a pencil for graphs and diagrams only.

Write your name, centre number and candidate number in the spaces at the top of this page.

Answer **all** the questions in the spaces provided.

If you run out of space, use the additional page at the back of the booklet. Question numbers must be given for the work written on the additional page.

Take π as 3·14 or use the π button on your calculator.

For Examiner's use only		
Question	**Maximum Mark**	**Mark Awarded**
1.	**9**	
2.	**12**	
3.	**13**	
4.	**8**	
5.	**6**	
6.	**7**	
7.	**13**	
8.	**12**	
Total	**80**	

3310U601
01

INFORMATION FOR CANDIDATES

You should give details of your method of solution when appropriate.

Unless stated, diagrams are not drawn to scale.

Scale drawing solutions will not be acceptable where you are asked to calculate.

The number of marks is given in brackets at the end of each question or part-question.

In question **1**, the assessment will take into account the quality of your linguistic and mathematical organisation, communication and accuracy in writing.

NOV223310U60101

© WJEC CBAC Ltd.

Formula List – Higher Tier

Area of trapezium $= \frac{1}{2}(a + b)h$

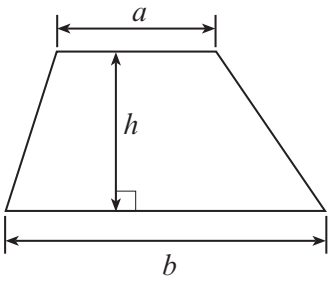

Volume of prism = area of cross-section × length

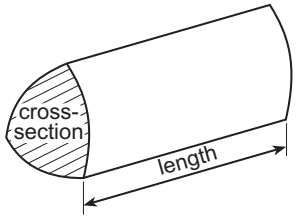

Volume of sphere $= \frac{4}{3}\pi r^3$

Surface area of sphere $= 4\pi r^2$

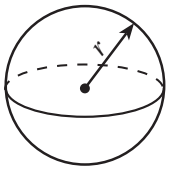

Volume of cone $= \frac{1}{3}\pi r^2 h$

Curved surface area of cone $= \pi r l$

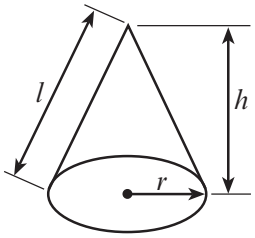

In any triangle ABC

Sine rule $\frac{a}{\sin A} = \frac{b}{\sin B} = \frac{c}{\sin C}$

Cosine rule $a^2 = b^2 + c^2 - 2bc \cos A$

Area of triangle $= \frac{1}{2}ab \sin C$

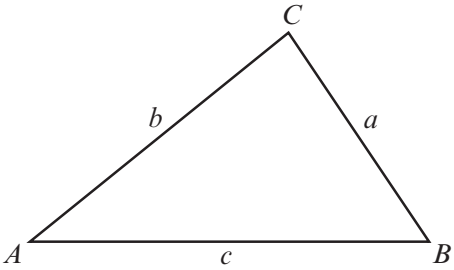

The Quadratic Equation

The solutions of $ax^2 + bx + c = 0$ where $a \neq 0$ are given by $x = \frac{-b \pm \sqrt{(b^2 - 4ac)}}{2a}$

Annual Equivalent Rate (AER)

AER, as a decimal, is calculated using the formula $\left(1 + \frac{i}{n}\right)^n - 1$, where i is the nominal interest rate per annum as a decimal and n is the number of compounding periods per annum.

© WJEC CBAC Ltd.

Examiner only

1. *In this question, you will be assessed on the quality of your organisation, communication and accuracy in writing*.

Last year, Viktor's total income before tax was 28 000 euros.

The tax bands, taxable income and tax rates for last year were as follows:

Band	Taxable income	Tax rate
Personal allowance	Up to 10 000 euros	0%
Basic rate	10 000 euros to 25 000 euros	22%
Higher rate	Over 25 000 euros	35%

Viktor has already paid 3600 euros towards his income tax bill for last year.
Calculate how much income tax Viktor still owes.
You must show all your working. [7 + 2 OCW]

.....

.....

.....

.....

.....

.....

.....

.....

.....

.....

.....

.....

.....

.....

3310U601
03

© WJEC CBAC Ltd.

Examiner only

2. Delyth and Ronnie are both students at the local college.

(a) Their houses and the college are all joined by straight roads, as shown in the diagram.

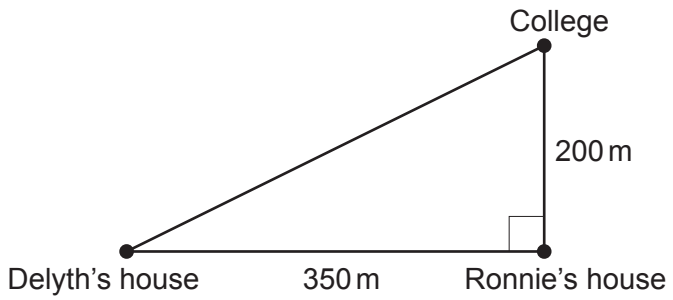

Diagram not drawn to scale

Delyth usually walks directly to college.
Calculate how much further Delyth has to walk if she passes Ronnie's house on her way to college. [5]

.....

.....

.....

.....

.....

.....

.....

.....

.....

© WJEC CBAC Ltd.

Examiner only

(b) 35 students were asked how far they travelled to the college.
The results are recorded in the table below.

Distance, d (metres)	Frequency
$100 < d \leqslant 200$	9
$200 < d \leqslant 1000$	10
$1000 < d \leqslant 3000$	15
$3000 < d \leqslant 7000$	1

(i) Ronnie is one of these 35 students.
He walks 200 m directly to college.

Does Ronnie travel further than the median distance travelled by these 35 students?

Yes ☐ No ☐ Can't tell ☐

You must give a reason for your answer. [1]

.....

.....

(ii) Calculate an estimate of the mean distance these 35 students travelled to the college. [4]

.....

.....

.....

.....

.....

.....

.....

.....

Estimate of the mean distance travelled by these 35 students is ..... m

3310U601
05

© WJEC CBAC Ltd.

Examiner only

(c) There are 140 students who travel by bus to and from college.

Delyth wants to find out why these students do not walk to college.
She has decided to use a systematic sampling method to select 7 of these students to form a discussion group.

The names of all the 140 students are in a list.
Delyth has randomly selected the 2nd student in the list to join the discussion group.

Complete the table below to give the positions in the list of the 7 students selected to join the discussion group. [2]

.....

.....

.....

Student	1	2	3	4	5	6	7
Position in the list	2nd	.....	.....	.....	.....	.....	.....

© WJEC CBAC Ltd.

Examiner only

3. (a) 10 years ago, Matteo bought a car for £4500.
His car depreciated in value by 20% in the **first** year.
In each of the following years, his car depreciated by 14% of its previous year's value.

Show that the value of Matteo's car is now less than £950.

You must show all your working. [3]

.....

.....

.....

.....

.....

.....

.....

.....

(b) Matteo's car insurance has increased by 25% from the amount he paid last year.
His car insurance is £750 this year.

Calculate the amount Matteo paid for his car insurance last year. [2]

.....

.....

.....

.....

.....

.....

Matteo paid £ ..... for his car insurance last year.

3310U601 07

© WJEC CBAC Ltd.

Examiner only

(c) The diagram below shows the front of Matteo's garage.

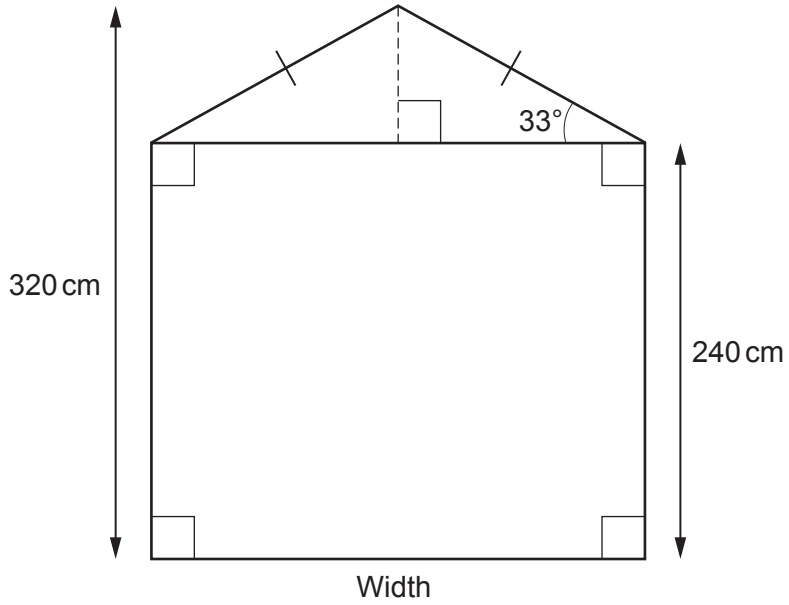

Diagram not drawn to scale

Calculate the width of Matteo's garage. [5]

.....

.....

.....

.....

.....

.....

.....

.....

.....

.....

.....

.....

.....

© WJEC CBAC Ltd.

Examiner only

(d) The length of Matteo's car is 400 cm, correct to the **nearest 10 cm**.
The length of his garage is 550 cm, correct to the **nearest 10 cm**.

When Matteo parks his car, he leaves exactly 70 cm between the car and the back wall of the garage.

Calculate the maximum length of the space between Matteo's car and the garage door.
[3]

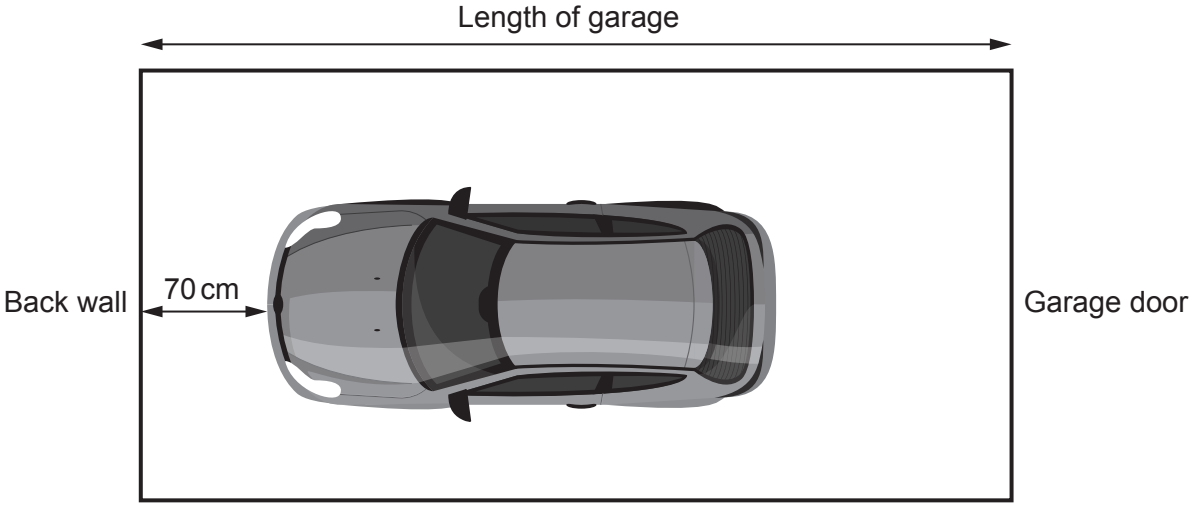

Diagram not drawn to scale

.....

.....

.....

.....

.....

3310U601
09

© WJEC CBAC Ltd.

Examiner only

4. (a) The population of Barbados in 1644 was said to be 30 000.

By 1964, the population of Barbados had increased by 682%.
From 1964 to 2014, the population of Barbados increased by a further 20%.

Calculate the population of Barbados in 2014.
You must show all your working. [3]

.....

.....

.....

.....

.....

.....

(b) The area of Barbados is 432 km^2.
The population of Barbados in September 2019 was 287 106.

Calculate the population density of Barbados in September 2019.
Give your answer correct to 2 significant figures. [3]

.....

.....

.....

.....

.....

(c) The density of some of the sand in Barbados is 1442 kg/m^3.
Express this density in g/cm^3. [2]

.....

.....

.....

© WJEC CBAC Ltd.

BLANK PAGE

PLEASE DO NOT WRITE ON THIS PAGE

© WJEC CBAC Ltd.

5. Gareth's living room is rectangular. It has a doorway close to one of the corners of the room.

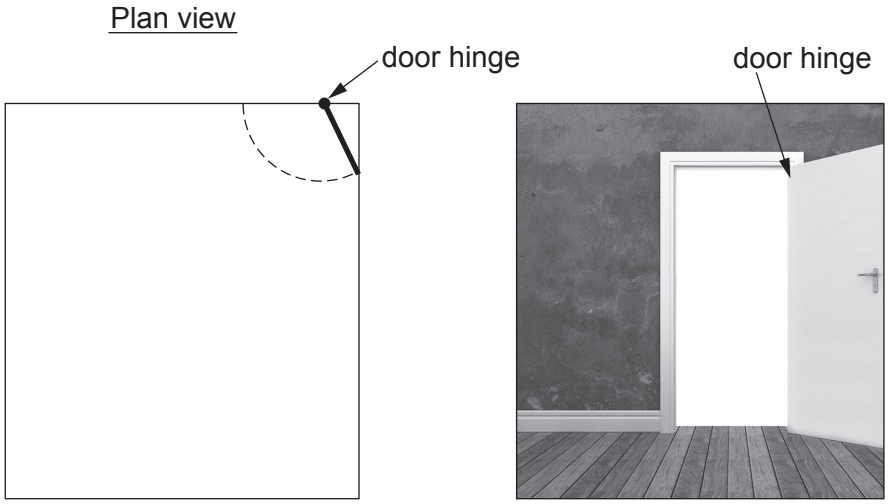

Diagrams not drawn to scale

Gareth's living room door is 76 cm wide.
The door hinge is 41 cm from the corner of the room.
When the door is fully open, it touches the wall 64 cm from the corner.

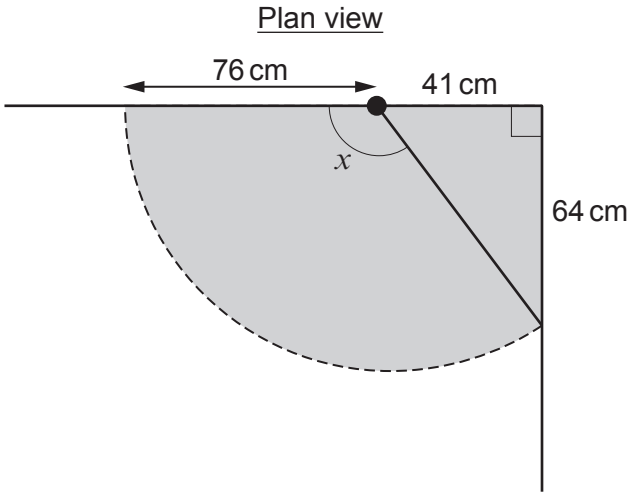

Diagram not drawn to scale

The shaded region in the diagram is an unusable part of his living room floor.

© WJEC CBAC Ltd.

Examiner only

By first finding the size of angle x, calculate the area of this unusable part of Gareth's living room floor. [6]

.....

.....

.....

.....

.....

.....

.....

.....

.....

.....

.....

.....

.....

.....

© WJEC CBAC Ltd.

Examiner only

6. Rebecca needs to save £10 000 for the deposit to buy a new house.
She has opened a savings account with Dragon Building Society. The account has a nominal annual rate of 5·4%, with interest paid on the last day of every month.

The formula for calculating the amount of money in the account at the end of every month is:

$$A = M\left(\frac{\left((1+r)^n - 1\right)(1+r)}{r}\right)$$

where:

A is the amount of money in the account at the end of every month,
M is the amount deposited into the account on the 1st day of each month,
r is the **monthly** interest rate written as a decimal,
n is the number of months the account has been open.

Rebecca opened the account on 1st August 2022, depositing £335 into the account.
She will deposit £335 into the account on the 1st day of every month.

(a) At the end of which month, and in which year, will Rebecca have the £10 000 she needs?
You must show all your working. [4]

.....

.....

.....

.....

.....

.....

.....

.....

.....

.....

.....

.....

Rebecca will have the £10 000 at the end of ..... in the year .....

© WJEC CBAC Ltd.

Examiner only

(b) Calculate the AER for Rebecca's savings account.
Give your answer as a percentage, correct to 2 decimal places. [2]

.....

.....

.....

.....

.....

.....

.....

(c) Rebecca's friend, Seren, opened a similar savings account with Dragon Building Society on 1st June 2020, depositing £300.
Seren then deposited £300 into the account on the 1st day of every month.
By 30th November 2021, Seren had £5636.84 in the account.

How much interest had Seren received?
Circle your answer. [1]

£236.84 £636.84 £836.84 £3836.84 £4136.84

.....

.....

.....

.....

© WJEC CBAC Ltd.

Examiner only

7. (a) The Great Pyramid of Giza, in Egypt, is the oldest of the Seven Wonders of the Ancient World.

It is a square-based pyramid of base length 230 m.
It stands on horizontal ground.
Each of the sloping **edges** of the pyramid has a length of 217 m.

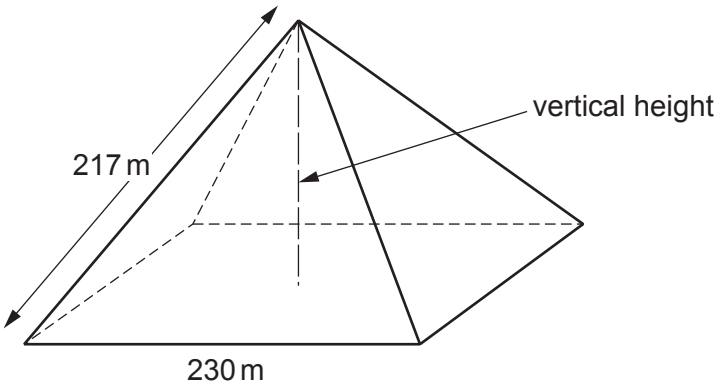

Diagram not drawn to scale

Calculate the volume of the Great Pyramid of Giza. [7]

.....

.....

.....

.....

.....

.....

.....

.....

.....

.....

.....

.....

.....

.....

.....

© WJEC CBAC Ltd.

Examiner only

(b) (i) A gift shop in Giza makes souvenir pyramids.
They are based on the Great Pyramid.
The shop paints all the faces of the souvenir pyramids.
The base length of a souvenir pyramid is related to the total surface area to be painted by the formula:

$$b = \sqrt{\frac{A}{1 + \tan 58^\circ}}$$

where:
- b is the base length
- A is the total surface area to be painted.

Calculate the total surface area to be painted of a souvenir pyramid that has a base length of 12 cm. [3]

.....

.....

.....

.....

.....

(ii) The Sphinx is another ancient monument that sits next to the Great Pyramid.
The shop sells two sizes of Sphinx souvenirs that are mathematically similar.

Diagrams not drawn to scale

The small souvenir has a length of 15 cm and a total surface area to be painted of 400 cm^2. The large souvenir has a length of 31·5 cm.
Calculate the total surface area to be painted of the large souvenir. [3]

.....

.....

.....

.....

.....

© WJEC CBAC Ltd.

Examiner only

8. Two cruise ships, The Explorer and The Magellan, leave the same port at 06:30.
The Explorer sails at a speed of 30 km/h on a bearing of 051º.
The Magellan sails at a speed of 35 km/h.
The angle between the courses of the two ships when they set sail is 49º.

(a) At 11:00, The Magellan comes to a stop due to engine failure.
The diagram below shows the positions of the two ships at 11:00.

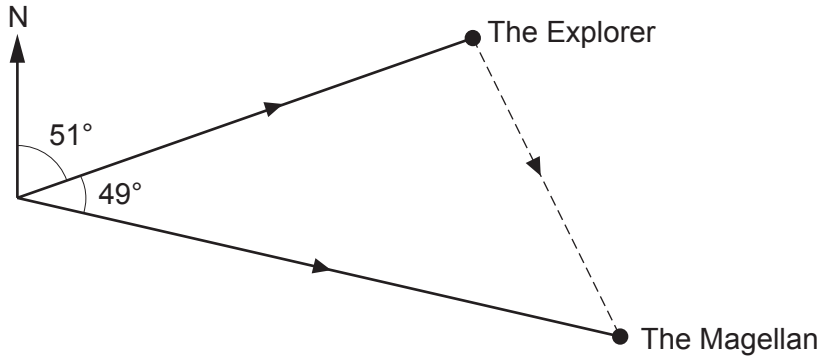

Diagram not drawn to scale

Immediately, The Explorer then heads directly towards The Magellan to pick up its passengers.
It travels at a speed of 30 km/h.
Calculate the time, to the nearest minute, when The Explorer will reach The Magellan.
[7]

.....

.....

.....

.....

.....

.....

.....

.....

.....

.....

.....

.....

.....

© WJEC CBAC Ltd.

Examiner only

.....

.....

.....

Time when The Explorer will reach The Magellan is .....

(b) Calculate the bearing The Explorer has to sail on from 11:00 onwards to arrive at The Magellan. [5]

.....

.....

.....

.....

.....

.....

.....

.....

.....

.....

.....

.....

END OF PAPER

© WJEC CBAC Ltd.

Question number	Additional page, if required. Write the question number(s) in the left-hand margin.	Examiner only

© WJEC CBAC Ltd.