Surname	Centre Number	Candidate Number
First name(s)		0

GCSE

3310U20-1

A21-3310U20-1

THURSDAY, 4 NOVEMBER 2021 – MORNING

MATHEMATICS – NUMERACY
UNIT 2: CALCULATOR-ALLOWED
FOUNDATION TIER

1 hour 25 minutes

ADDITIONAL MATERIALS

A calculator will be required for this paper.

A ruler, a protractor and a pair of compasses may be required.

INSTRUCTIONS TO CANDIDATES

Use black ink or black ball-point pen. Do not use gel pen or correction fluid.

You may use a pencil for graphs and diagrams only.

Write your name, centre number and candidate number in the spaces at the top of this page.

Answer **all** the questions in the spaces provided.

If you run out of space, use the additional page at the back of the booklet. Question numbers must be given for the work written on the additional page.

Take π as 3·14 or use the π button on your calculator.

INFORMATION FOR CANDIDATES

You should give details of your method of solution when appropriate.

Unless stated, diagrams are not drawn to scale.

Scale drawing solutions will not be acceptable where you are asked to calculate.

The number of marks is given in brackets at the end of each question or part-question.

In question **4***(a)*(i), the assessment will take into account the quality of your linguistic and mathematical organisation, communication and accuracy in writing.

For Examiner's use only		
Question	**Maximum Mark**	**Mark Awarded**
1.	**7**	
2.	**5**	
3.	**9**	
4.	**11**	
5.	**11**	
6.	**4**	
7.	**6**	
8.	**4**	
9.	**3**	
Total	**60**	

3310U201
01

NOV213310U20101

© WJEC CBAC Ltd.

Formula List – Foundation Tier

Area of trapezium $= \frac{1}{2}(a + b)h$

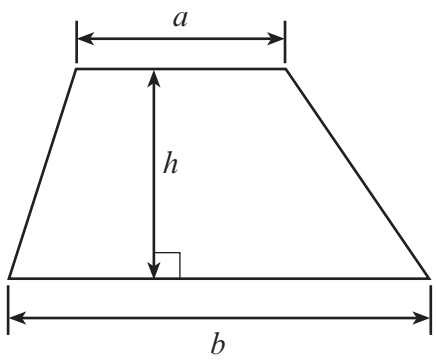

© WJEC CBAC Ltd.

Examiner only

1. The *Tour de France* is a cycle race.

In 2018, Geraint Thomas was the first Welshman to win the *Tour de France*.

(a) The total distance of the 2018 *Tour de France* was approximately 3 351 000 m.
Write down, in words, the number 3 351 000. [1]

.....

.....

(b) The *Tour de France* that Geraint Thomas won took place in July 2018.
He was born on 25 May 1986.
How old was Geraint when he won the *Tour de France*? [1]

.....

.....

..... years old

(c) Geraint Thomas completed the race in 83 hours 17 minutes and 13 seconds.
Tom Dumoulin took 1 minute and 51 seconds **longer** than Geraint Thomas to complete the race.

How long did Tom Dumoulin take to complete the race? [2]

.....

.....

.....

.....

..... hours ..... minutes ..... seconds

3310U201
03

© WJEC CBAC Ltd.

Examiner only

(d) The cards below show information about ten *Tour de France* races.
Each card shows the year of the race and the name and country of the winning cyclist.

2011 Cadel Evans Australia	2012 Bradley Wiggins Great Britain	2013 Chris Froome Great Britain	2014 Vincenzo Nibali Italy	2015 Chris Froome Great Britain
2016 Chris Froome Great Britain	2017 Chris Froome Great Britain	2018 Geraint Thomas Great Britain	2019 Egan Bernal Colombia	2020 Tadej Pogačar Slovenia

One card is chosen at random.
Which of the words below best describes the chance that a cyclist from Great Britain will be chosen?
Circle your answer. [1]

certain likely an even chance unlikely impossible

© WJEC CBAC Ltd.

Examiner only

(e) For some of the faster parts of the race, cyclists can use wheels with three straight spokes. This is shown on the sketch below.
The straight spokes are equally spaced around the wheel.

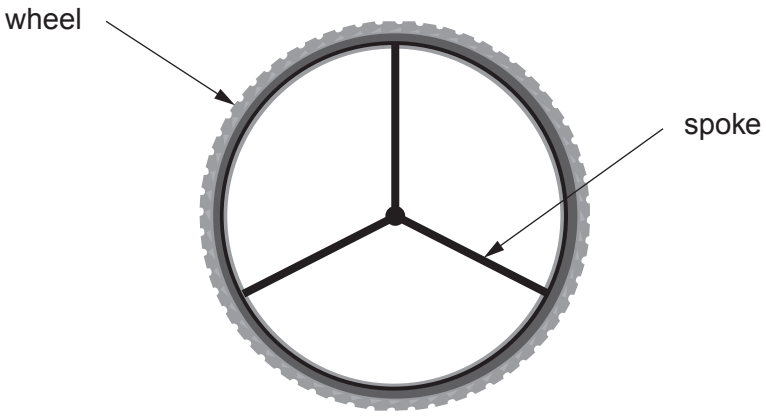

Diagram not drawn to scale

Complete the scale diagram of the wheel below.
One of the three straight spokes has been drawn for you. [2]

.....

.....

.....

.....

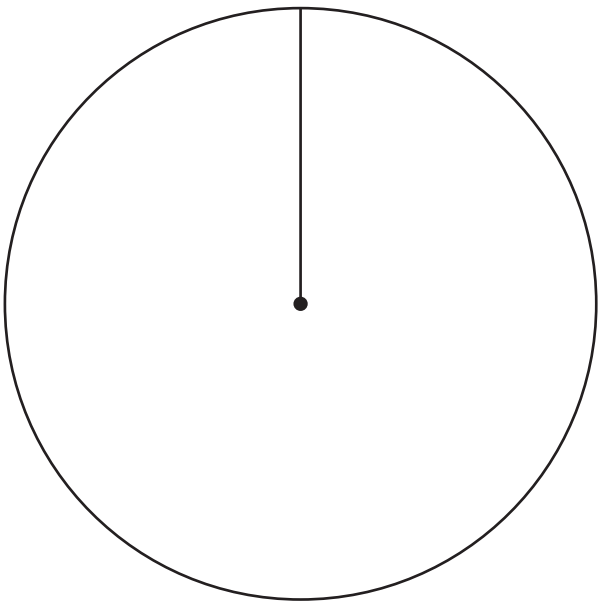

3310U201 05

© WJEC CBAC Ltd.

Examiner only

2. A school has 4 houses: *Conwy*, *Hafren*, *Ystwyth* and *Taf*.
The 4 houses are competing in their school Eisteddfod.

(a) Miss James is keeping score for the school Eisteddfod and has lost the results.
She has made a note of what she remembers.

- The total number of points scored by the 4 houses was 1970
- *Conwy* scored 400 points
- *Hafren* scored 670 points
- *Ystwyth* scored twice as many points as *Taf*

How many points did *Ystwyth* and *Taf* each score? [3]

.....

.....

.....

.....

.....

.....

.....

Ystwyth scored ..... points *Taf* scored ..... points

© WJEC CBAC Ltd.

Examiner only

(b) Here are the number of points scored by each house in the mathematics competition in the school Eisteddfod.

Conwy	10 points
Hafren	60 points
Ystwyth	50 points
Taf	55 points

A pupil has drawn a bar chart to show this information.
The bar chart is incorrect.

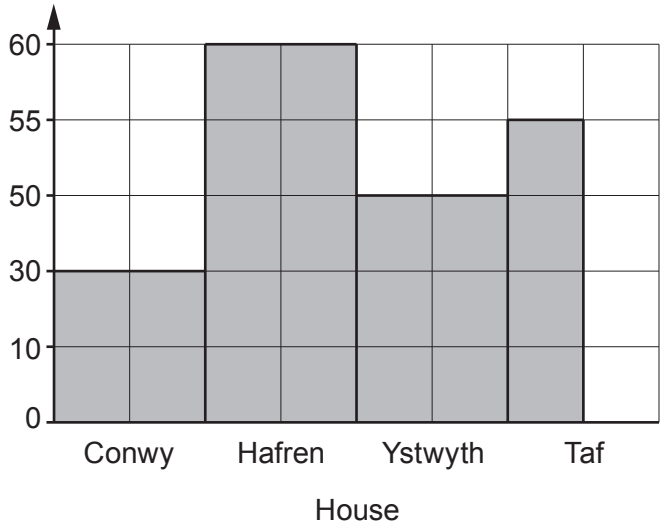

Give **two** reasons why the bar chart is incorrect. [2]

Reason 1:

.....

.....

.....

.....

Reason 2:

.....

.....

.....

.....

3310U201
07

© WJEC CBAC Ltd.

Examiner only

3. *(a)* Arwel is tiling an area behind his bathroom sink.
He uses one large rectangular tile with length 330 mm and width 250 mm.

(i) Find the area of the rectangular tile.
State the units of your answer. [3]

.....

.....

.....

.....

(ii) Arwel puts a 15 mm wide border around three sides of the tile.
He puts a 4 mm wide strip of adhesive between the tile and the sink.

This is shown below.

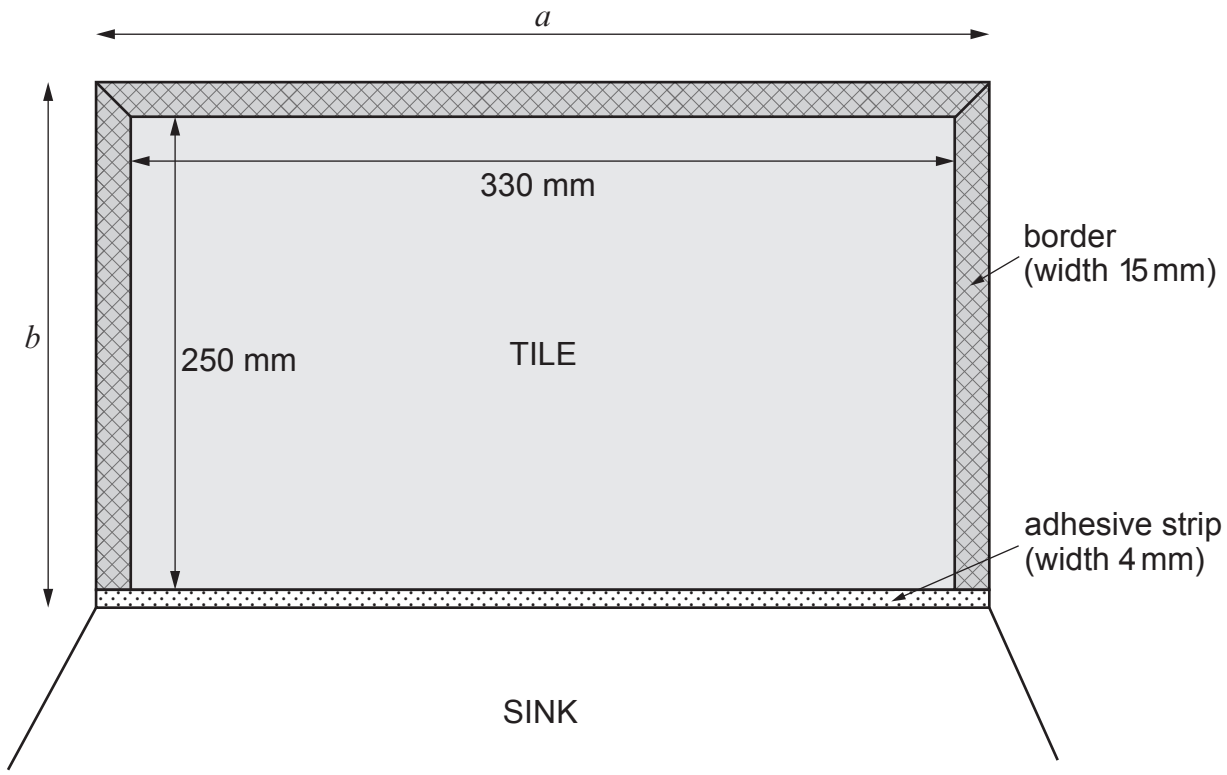

Diagram not drawn to scale

© WJEC CBAC Ltd.

Examiner only

The length a on the diagram is the total length of the tile and borders.
The width b on the diagram is the total width of the tile, border and adhesive strip.

Find the length a and the width b.
Give your answers in cm. [3]

.....

.....

.....

.....

.....

.....

Length a = ... cm Width b = ... cm

(b) Arwel employs a tiler to do more tiling work in his house.

The tiler uses the following formula when preparing the bill for Arwel.

Total cost = £23 × number of hours worked + cost of materials

Calculate the total cost when the tiler works for 15 hours and 30 minutes and the cost of materials is £237.60. [3]

.....

.....

.....

3310U201 09

© WJEC CBAC Ltd.

Examiner only

4. Laura wants to join her local gym for a year.

(a) The local gym has two ways of paying for membership.

Plan A:
- Pay a joining fee of £135
- then £31.99 a month for the year

Plan B: Pay one payment of £480 for the year

The manager offers Laura a 15% discount off the **joining fee** in Plan A.

(i) *In this part of the question, you will be assessed on the quality of your organisation, communication and accuracy in writing.*

Which plan is the cheaper for Laura?
You must show all your working. [5 + 2 OCW]

.....

.....

.....

.....

.....

.....

.....

.....

.....

.....

.....

.....

.....

.....

(ii) What possible disadvantage could there be if Laura chooses the cheaper plan? [1]

.....

.....

© WJEC CBAC Ltd.

Examiner only

(b) Laura's local gym offers different activity classes.
Below is the timetable of classes.

Mon	Tues	Wed	Thurs	Fri
6 a.m. CIRCUITS		6 a.m. SPIN	6 a.m. SPIN	6 a.m. CIRCUITS
10 a.m. SPIN			10 a.m. STEP	10 a.m. RUNNING CLUB
6 p.m. AQUA AEROBICS	6 p.m. CIRCUITS		6 p.m. RUNNING CLUB	
7 p.m. RUNNING CLUB		7 p.m. CIRCUITS	7 p.m. AQUA AEROBICS	
8 p.m. SPIN	8 p.m. RUNNING CLUB	8 p.m. AQUA AEROBICS		8 p.m. STEP

Next week, Laura would like to attend **four** classes from the timetable.

Laura **cannot** attend:
- any classes on Thursday,
- more than **one** class a day,
- any of the 10 a.m. classes,
- any of the CIRCUITS classes.

She would like to attend:
- one STEP class,
- one 6 a.m. SPIN class,
- one AQUA AEROBICS class,
- one RUNNING CLUB session.

Which four classes can Laura attend?
Complete the table below. [3]

	DAY	TIME	ACTIVITY
1			
2			
3			
4			

© WJEC CBAC Ltd.

Examiner only

5. *(a)* Mr Khan has received his electricity bill.
However, he has splashed coffee over some of the entries.

Mr Khan
306 Heol Rowe

Period	Previous meter reading	Present meter reading	Number of units of electricity used
July, August and September 2021	34 560	35 180	.....

Charge for electricity: ..... units at **18p per unit**	£ .....
Standing charge: 3 months at **£6 per month**	£18
Total charges:	£ .....
VAT at 5%:	£ .....

Amount to pay: £ .....

Complete Mr Khan's electricity bill to find the amount he has to pay. [6]

.....

.....

.....

.....

.....

© WJEC CBAC Ltd.

Examiner only

(b) Mr Khan currently has each of the following bills to pay:

- Water bill £234
- Gas bill £120
- Loan repayment £45

If Mr Khan waits until next month to pay these bills, he will pay a month's interest on each of the bills.
Interest is charged for the month as listed:

- Water 2%
- Gas 2·3%
- Loan 11%

Calculate the **total interest** Mr Khan will have to pay if he waits until next month to pay these bills.
You must show all your working. [5]

.....

.....

.....

.....

.....

.....

.....

.....

.....

.....

.....

.....

.....

.....

.....

.....

© WJEC CBAC Ltd.

Examiner only

6. Liam is following a recipe to make Welsh Cakes.
He places flour, butter and sugar in a mixing bowl.
These three ingredients have a total mass of 1920 g.

He checks the recipe and finds that:

- the mass of sugar is $\frac{3}{16}$ of the total mass of these three ingredients,
- for every 90 g of sugar he needs to add one egg and 50 g of sultanas.

Calculate the number of eggs and the mass of sultanas that Liam needs to make his Welsh Cakes. [4]

.....

.....

.....

.....

.....

.....

.....

.....

.....

.....

.....

.....

Number of eggs .....

Mass of sultanas ..... g

© WJEC CBAC Ltd.

Examiner only

7. Ms Ritter is buying a new dining table.
She has seen a table with a circular top and another with a rectangular top.

The circular top has a diameter of 1·5 m.
The rectangular top measures 2 m by 0·8 m.

(a) Which of the table tops has the greater perimeter?
You must show all your working. [3]

.....

.....

.....

.....

.....

.....

.....

.....

(b) Does the table top with the greater perimeter also have the greater area?
You must show all your working. [3]

.....

.....

.....

.....

.....

.....

.....

© WJEC CBAC Ltd.

Examiner only

8. In a science lesson, 13 students calculated an estimate of the area of their skin.
The results are shown on the scatter diagram below.

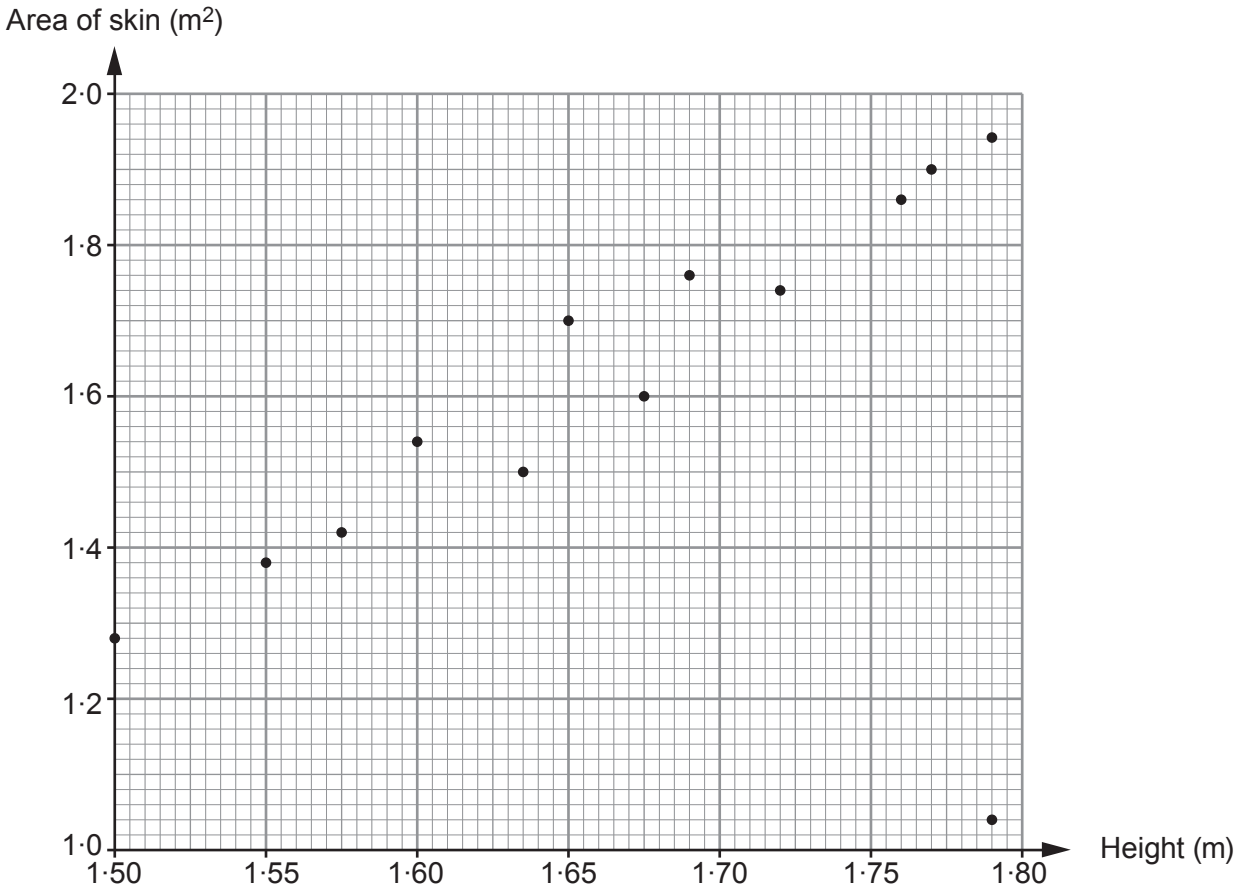

(a) Arwyn is the only student who made an error in his calculation.
He is one of the tallest students.
What is Arwyn's calculated estimate of the area of his skin?
Circle your answer. [1]

1·79 m^2 1·94 m^2 1·02 m^2 1·20 m^2 1·04 m^2

(b) Which term best describes the correlation between a person's height and the estimate of the area of their skin?
Circle your answer. [1]

No correlation Spread Certain Positive Negative

© WJEC CBAC Ltd.

Examiner only

(c) Garth is 5 cm taller than Ella.
The calculated estimate of the area of Ella's skin is $1{\cdot}54\,m^2$.
How tall is Garth? [2]

.....

.....

.....

Garth is ..... m tall

9. A bottle contains 250 grams of sun cream.

A website recommends that one application of sun cream is 1 ounce.

1 gram = 1000 milligrams
1 ounce ≈ 28 350 milligrams

Use this recommendation to answer the following question.

How many applications of sun cream are there in this bottle?
You must show all your working. [3]

.....

.....

.....

.....

.....

.....

END OF PAPER

© WJEC CBAC Ltd.

Question number	Additional page, if required. Write the question number(s) in the left-hand margin.	Examiner only

© WJEC CBAC Ltd.

BLANK PAGE

PLEASE DO NOT WRITE ON THIS PAGE

© WJEC CBAC Ltd.

BLANK PAGE

PLEASE DO NOT WRITE ON THIS PAGE

© WJEC CBAC Ltd.