Surname	Centre Number	Candidate Number
Other Names		0

GCSE

3310U50-1

A18-3310U50-1

MATHEMATICS – NUMERACY
UNIT 1: NON-CALCULATOR
HIGHER TIER

TUESDAY, 6 NOVEMBER 2018 – MORNING

1 hour 45 minutes

ADDITIONAL MATERIALS

The use of a calculator is not permitted in this examination.

A ruler, a protractor and a pair of compasses may be required.

INSTRUCTIONS TO CANDIDATES

Use black ink or black ball-point pen. Do not use gel pen or correction fluid.

You may use a pencil for graphs and diagrams only.

Write your name, centre number and candidate number in the spaces at the top of this page.

Answer **all** the questions in the spaces provided.

If you run out of space, use the continuation page at the back of the booklet. Question numbers must be given for the work written on the continuation page.

Take π as 3·14.

INFORMATION FOR CANDIDATES

You should give details of your method of solution when appropriate.

Unless stated, diagrams are not drawn to scale.

Scale drawing solutions will not be acceptable where you are asked to calculate.

The number of marks is given in brackets at the end of each question or part-question.

In question **4***(a)*, the assessment will take into account the quality of your linguistic and mathematical organisation, communication and accuracy in writing.

For Examiner's use only		
Question	**Maximum Mark**	**Mark Awarded**
1.	**3**	
2.	**4**	
3.	**3**	
4.	**11**	
5.	**8**	
6.	**7**	
7.	**4**	
8.	**10**	
9.	**2**	
10.	**4**	
11.	**8**	
12.	**11**	
13.	**5**	
Total	**80**	

3310U501
01

NOV183310U50101

© WJEC CBAC Ltd.

Formula List - Higher Tier

Area of trapezium = $\frac{1}{2}(a + b)h$

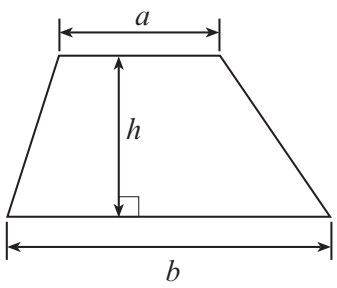

Volume of prism = area of cross-section × length

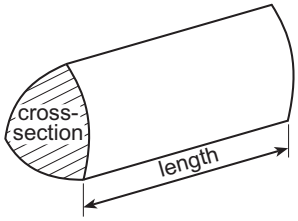

Volume of sphere = $\frac{4}{3}\pi r^3$

Surface area of sphere = $4\pi r^2$

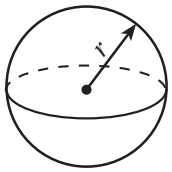

Volume of cone = $\frac{1}{3}\pi r^2 h$

Curved surface area of cone = $\pi r l$

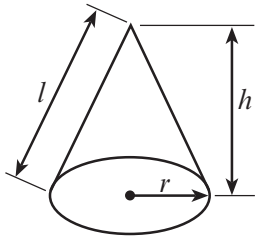

In any triangle ABC

Sine rule $\frac{a}{\sin A} = \frac{b}{\sin B} = \frac{c}{\sin C}$

Cosine rule $a^2 = b^2 + c^2 - 2bc \cos A$

Area of triangle = $\frac{1}{2}ab \sin C$

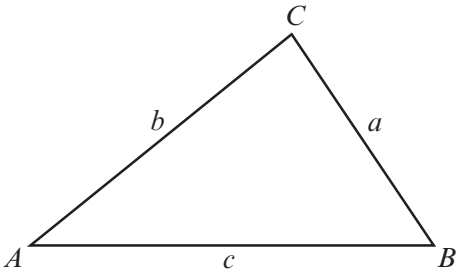

The Quadratic Equation

The solutions of $ax^2 + bx + c = 0$ where $a \neq 0$ are given by $x = \frac{-b \pm \sqrt{(b^2 - 4ac)}}{2a}$

Annual Equivalent Rate (AER)

AER, as a decimal, is calculated using the formula $\left(1 + \frac{i}{n}\right)^n - 1$, where i is the nominal interest rate per annum as a decimal and n is the number of compounding periods per annum.

© WJEC CBAC Ltd.

Examiner only

1. *(a)* Mold is on a bearing of 065° from Ruthin.
What is the bearing of Ruthin from Mold?
Circle your answer. [1]

245° 095° 295° 125° 315°

.....

.....

(b) When it is 19:40 in Cardiff, it is 23:40 in Dubai.

(i) What time is it in Dubai when it is 13:30 in Cardiff?
Circle your answer. [1]

15:30 10:30 09:30 17:30 19:30

.....

.....

(ii) What time is it in Cardiff when it is 02:10 in Dubai?
Circle your answer. [1]

20:10 06:10 22:10 10:10 00:10

.....

.....

3310U501
03

© WJEC CBAC Ltd.

Examiner only

2. Yousef has a piece of wallpaper.

He wants to draw some of the leaves to create a different design to screen print.

Diagram not drawn to scale

Yousef draws lines on the wallpaper.
Some of the lines are parallel.
He measures four angles and needs to calculate four more.

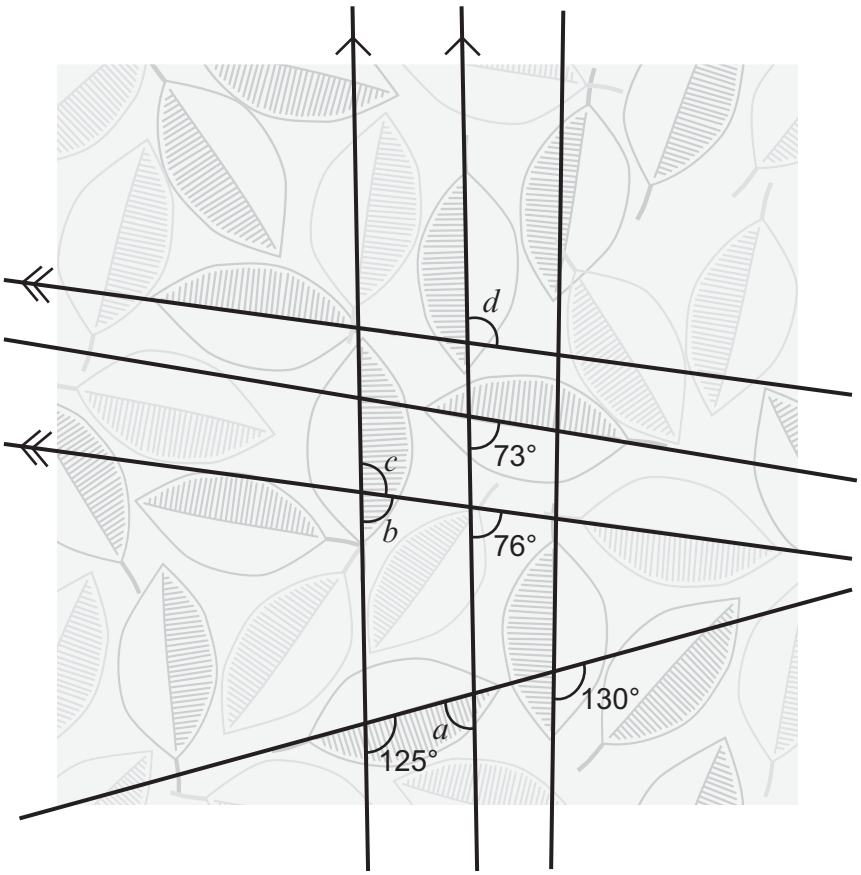

Diagram not drawn to scale

Find the size of each of the angles a, b, c and d. [4]

.....

.....

a = ... ° b = ... ° c = ... ° d = ... °

© WJEC CBAC Ltd.

Examiner only

3. Mrs Butler asked all her friends how many pairs of shoes they own.
Here are the results.

Number of pairs of shoes	1 to 6	7 to 12	13 to 18
Number of people	1	5	8

(a) Mrs Butler says,

'Most people in Wales own more than 12 pairs of shoes.'

Is Mrs Butler correct in using this data to come to this general conclusion?
You must give a reason for your answer. [1]

Yes ☐ No ☐

.....

.....

.....

(b) Write down **different groups** Mrs Butler could have chosen so that all of the data can be analysed more accurately. [2]

.....

.....

.....

.....

.....

.....

3310U501
05

© WJEC CBAC Ltd.

Examiner only

4. (a) *In this part of the question, you will be assessed on the quality of your organisation, communication and accuracy in writing.*

Jade is planning a weekend break to celebrate her 21st birthday.
The weekend break costs £350.
Jade's father says,

'If you save 21% of your earnings each week for the next 20 weeks, I will give you the rest of the money you need.'

Jade earns £72 per week.
How much is Jade's father offering to pay towards her weekend break?
You must show all your working. [4 + 2 OCW]

© WJEC CBAC Ltd.

Examiner only

(b) (i) Jade's new suitcase weighs 3 kg.
When it is packed, her suitcase must not weight more than 25 kg altogether.
What percentage of the 25 kg does Jade have left for packing? [2]

.....

.....

.....

.....

(ii) Which one of the following formulae could be used to work out the volume of Jade's new suitcase?
a, b and c are measurements of the 3 dimensions of the suitcase.
Circle your answer. [1]

$a + b^2 + c$ $\quad$ $2a^2c - 4\pi b^2$ $\quad$ $abc + \pi a^2c$ $\quad$ $a^3 - b^2 + c$ $\quad$ $a + b^3 + c$

(c) Jade needs a new passport photograph.
A passport photograph must be 45 mm high by 35 mm wide.

Jade has a mathematically similar photograph that she could reduce in size to use as her new passport photograph.
The height of this photograph is 9 cm.
Calculate the width of this photograph. [2]

.....

.....

.....

.....

.....

.....

3310U501
07

© WJEC CBAC Ltd.

Examiner only

5. The picture shows a mountain hut.
The hut
- stands on a rectangular base,
- has a uniform cross-section.

(a) Draw a sketch of the plan view of the mountain hut. [1]

(b) This mountain hut is shown on a map.
The scale of the map is 1 : 50 000.
On the map the mountain hut is 4·2 cm from a farmhouse.
How far away is the hut from the farmhouse?
Give your answer in km. [3]

.....

.....

.....

.....

.....

.....

.....

.....

Distance is ..... km

© WJEC CBAC Ltd.

Examiner only

(c) The map below shows the placement of four wind turbines, and a road connecting two of the turbines.

A new wind turbine, Efail, is to be built.
It is to be placed
- on the road connecting Bryn turbine and Cwm turbine, and
- on the perpendicular from Aber turbine to the road.

The map is drawn using a scale of **2 cm represents 1 km**.

How far will Efail turbine be from Dŵr turbine?
You **must** use constructions to answer this question, using **only a pair of compasses and a ruler**. [4]

Scale 2 cm represents 1 km

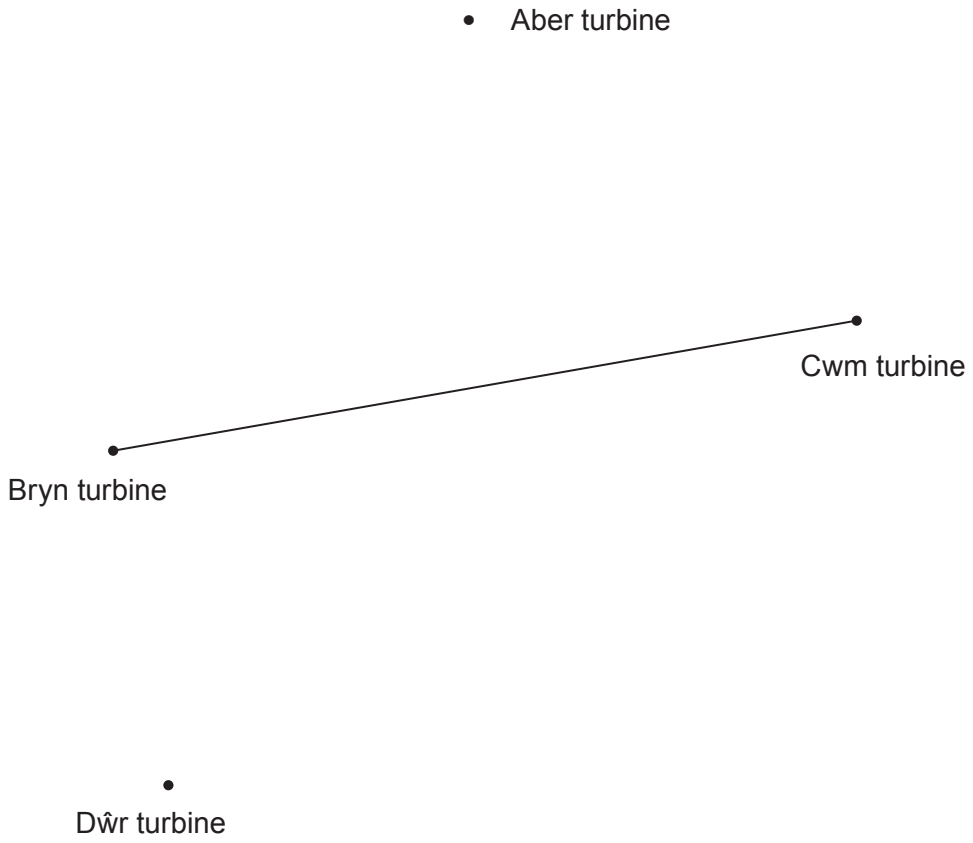

.....

.....

Distance is ..... km

© WJEC CBAC Ltd.

Examiner only

6. Gwen records the time she spends writing each of 240 text messages.
She finds the following.

- The greatest time is 1 minute 5 seconds.
- The range of the times is 60 seconds.
- The median is 45 seconds.
- The lower quartile is 23 seconds.
- The interquartile range is 32 seconds.

(a) Use the graph paper to draw a box-and-whisker diagram to represent Gwen's data. [5]

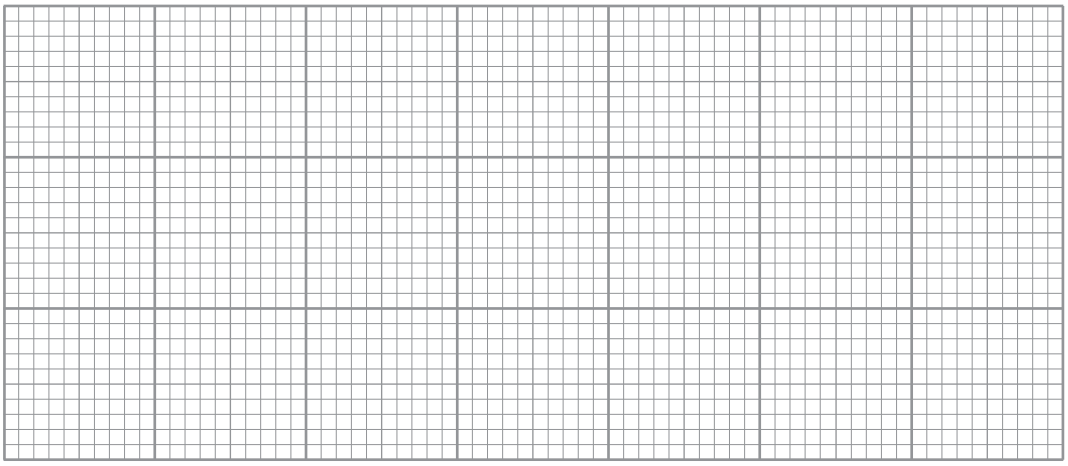

(b) How many of these text messages took Gwen more than 23 seconds to write? [2]

.....

.....

.....

..... text messages

© WJEC CBAC Ltd.

Examiner only

7. *(a)* There is a queue of 96 people waiting to buy concert tickets.

Liam has 8 vouchers to hand out, offering 20% off ticket prices.

He has decided to use a systematic sampling method to select who receives these 8 vouchers.

Liam has randomly selected the 6th person in the queue to receive the first voucher.

Use the table below to give the positions in the queue of the 8 people who would receive vouchers. [2]

.....

.....

.....

.....

.....

.....

.....

Voucher	1	2	3	4	5	6	7	8
Position in the queue	6th	.....	.....	.....	.....	.....	.....	.....

(b) Gerallt used his 20% off voucher to buy tickets.
He paid £120 for tickets using the voucher.
How much would these tickets have cost Gerallt without a voucher? [2]

.....

.....

.....

.....

.....

.....

.....

Cost without a voucher £ .....

3310U501
11

© WJEC CBAC Ltd.

Examiner only

8. Cellan is planning to invest a sum of money into a savings account.

Cellan has picked up a leaflet describing an account offered by a local bank.
The details of the account are shown below.

Account name	Minimum term	Minimum investment	Interest paid	Nominal annual interest rate
The Gower	1 year	£1000	Every 6 months	4%

(a) Calculate the Annual Equivalent Rate (AER) that *The Gower* account is offering.
Give your answer as a percentage. [5]

.....

.....

.....

.....

.....

.....

.....

.....

.....

.....

.....

.....

.....

AER = ... %

(b) Give one reason why banks use AER. [1]

.....

.....

.....

© WJEC CBAC Ltd.

Examiner only

(c) Cellan decides to invest his savings of £3000 into a 'Gower' savings account. He plans to save enough money to buy a motorbike costing £3200.

Calculate how much short of the £3200 Cellan would be after 1 year. [4]

.....

.....

.....

.....

.....

.....

.....

.....

.....

.....

.....

.....

.....

© WJEC CBAC Ltd.

Examiner only

9. A group of pupils sat a mathematics test.
The teacher grouped their marks using the intervals 1 to 20, 21 to 40, and so on.
She then drew the following cumulative frequency diagram to display the results.

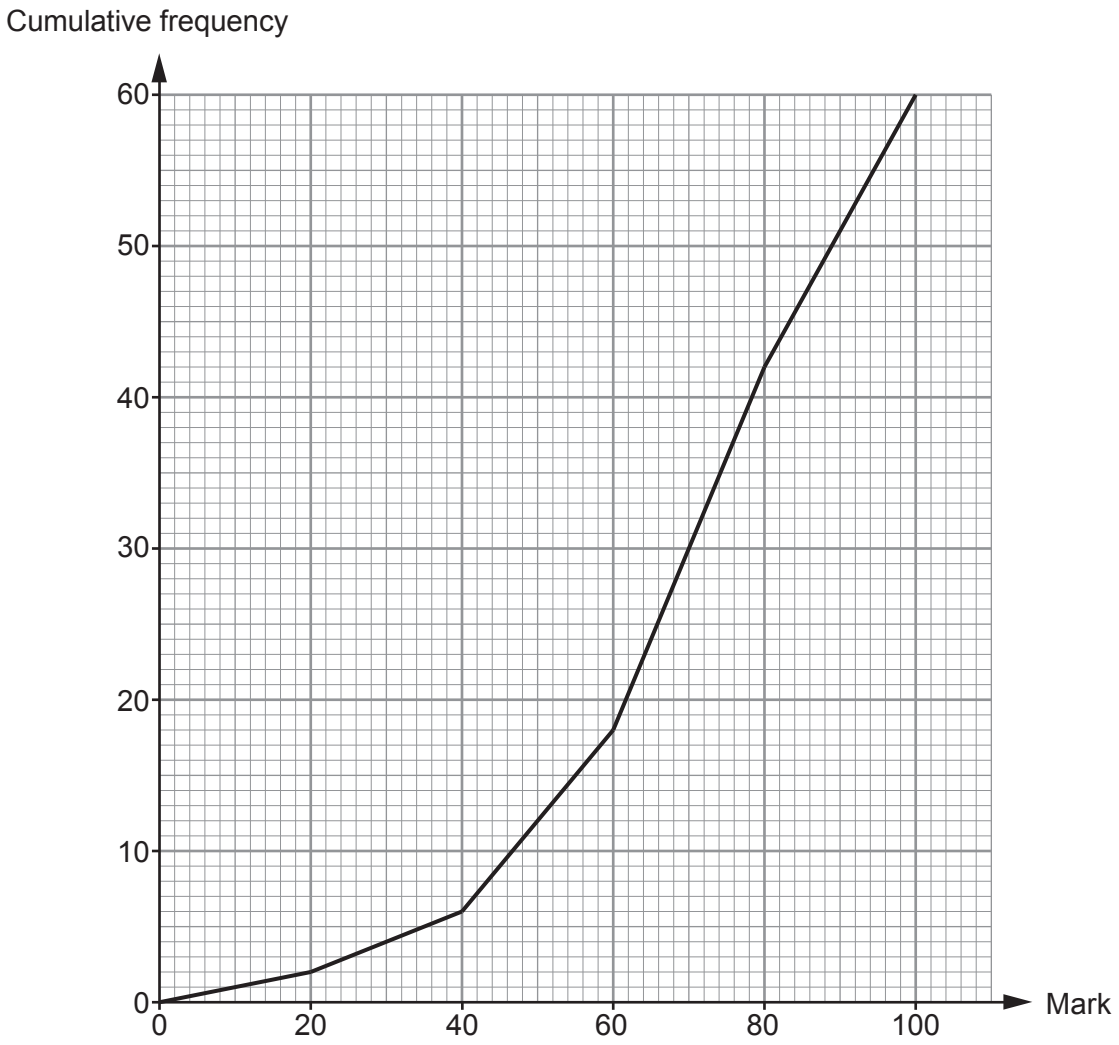

(a) Phoebe is one of the pupils who sat the test.
Phoebe says,
'The cumulative frequency diagram shows that the median mark was 70.'

Explain why the median mark may not be 70. [1]

.....

.....

.....

© WJEC CBAC Ltd.

Examiner only

(b) Consider the pupils who had a mark of 80 or less.

How many of these pupils would have needed to score more than 80 for Phoebe's estimate of the median to be 80?
Circle your answer. [1]

10 12 18 5 20

.....

.....

© WJEC CBAC Ltd.

Examiner only

10. Each of the 250 Year 10 pupils in Blaengwyn school study one foreign language at GCSE. The table below shows how many pupils chose to study French, German and Spanish.

French	German	Spanish
75	55	120

The Languages department is planning to take a group of 30 pupils on an educational trip to Europe.

Use a stratified sampling method to calculate the number of Year 10 pupils from each language group that should be taken on the trip.
You must show all your working. [4]

.....

.....

.....

.....

.....

.....

.....

.....

.....

.....

.....

.....

.....

.....

.....

Language	French	German	Spanish
Number in sample			

© WJEC CBAC Ltd.

BLANK PAGE

PLEASE DO NOT WRITE ON THIS PAGE

© WJEC CBAC Ltd.

Examiner only

11. A group of pupils are taking turns to ride a zip wire.

Aled models the time it takes each rider to travel sections of the zip wire.
He uses the formula

$$t = \frac{2s}{u+v}$$

where:
- t is the time taken, in seconds,
- s is the distance travelled, in metres,
- u is the starting velocity, in metres per second (ms^{-1}),
- v is the final velocity, in metres per second (ms^{-1}).

(a) Vrishank is the first pupil to ride the zip wire.
The following values were recorded for a section of his ride:

- s = 195 m, measured correct to the nearest 5 m,
- u = 5 ms^{-1}, measured correct to the nearest ms^{-1},
- v = 14 ms^{-1}, measured correct to the nearest ms^{-1}.

Using Aled's model, calculate the least possible time it could have taken Vrishank to travel this section of the zip wire. [4]

.....

.....

.....

.....

.....

.....

.....

.....

.....

.....

.....

.....

.....

.....

.....

© WJEC CBAC Ltd.

Examiner only

(b) Mari is the second pupil to ride the zip wire.
Values for a section of Mari's ride were recorded:

- u = 8 ms^{-1}, measured correct to the nearest ms^{-1},
- v = 21 ms^{-1}, measured correct to the nearest ms^{-1},
- t = 14 s, measured correct to the nearest second.

Using Aled's model, calculate the greatest possible distance that Mari could have travelled in this section of her ride. [4]

.....

.....

.....

.....

.....

.....

.....

.....

.....

.....

.....

.....

.....

.....

.....

© WJEC CBAC Ltd.

Examiner only

12. An architect has been asked to design a square-based glass pyramid that is to be built in a park.
The vertex at the top of the pyramid will be directly above the centre of the square base.
The edges of the pyramid will be made from steel.
Each sloping face will be made from glass.

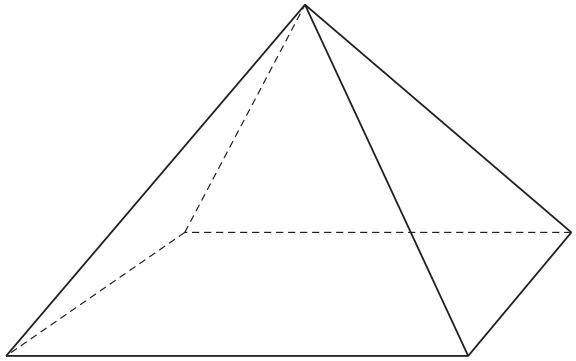

Diagram not drawn to scale

(a) The architect first plans to make a scale model of the pyramid.
The scale model will have base sides of length 14 cm and a vertical height of 8 cm.

The architect has drawn the following diagram of the model.

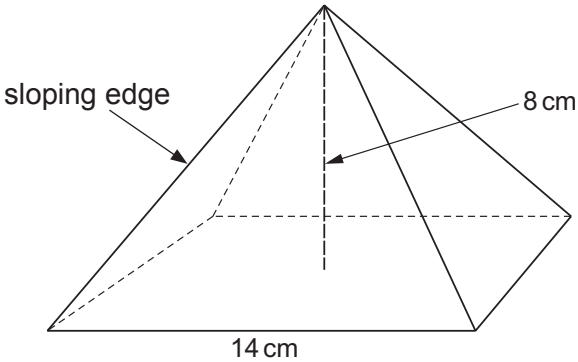

Diagram not drawn to scale

Calculate the length of each sloping edge of the model.

Give your answer in the form $a\sqrt{b}$, where a is an integer and b is a prime number. [6]

.....

.....

.....

.....

.....

.....

© WJEC CBAC Ltd.

Examiner only

(b) The area of each glass face on the scale model is 74 cm^2.
The full-size pyramid is to have a vertical height of 1·6 metres.

Use these values to calculate the area of each glass face on the full-size pyramid.
Give your answer in cm^2. [5]

© WJEC CBAC Ltd.

Examiner only

13. Taryn made a birthday cake for her brother Carwyn, and placed it on a cake stand.
She made a cylindrical cake of radius 12 cm and height 10 cm.
To make the birthday cake look like the letter 'C' for Carwyn, she cut out a large slice.

The cake she has left has a uniform cross-section in the shape of a sector of a circle with sector angle 300º.

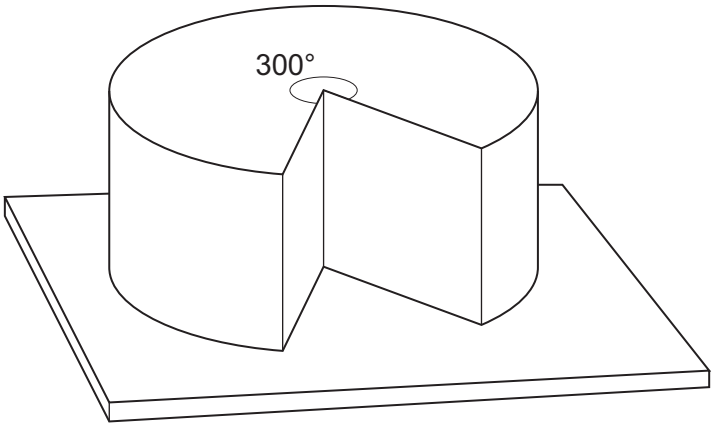

Diagram not drawn to scale

Taryn wants to put icing on all the visible surfaces of the cake.
Calculate the surface area that needs to be covered with icing.
Give your answer, **in its simplest form**, in terms of π. [5]

.....

.....

.....

.....

.....

.....

.....

.....

.....

.....

.....

.....

© WJEC CBAC Ltd.

Examiner only

.....

.....

.....

Surface area to be covered = ... cm^2

END OF PAPER

© WJEC CBAC Ltd.

Question number	Additional page, if required. Write the question number(s) in the left-hand margin.	Examiner only

© WJEC CBAC Ltd.