Surname	Centre Number	Candidate Number
First name(s)		0

GCSE

3300U40-1

A22-3300U40-1

WEDNESDAY, 16 NOVEMBER 2022 – MORNING

MATHEMATICS
UNIT 2: CALCULATOR-ALLOWED
INTERMEDIATE TIER

1 hour 45 minutes

ADDITIONAL MATERIALS

A calculator will be required for this examination.

A ruler, a protractor and a pair of compasses may be required.

INSTRUCTIONS TO CANDIDATES

Use black ink or black ball-point pen. Do not use gel pen or correction fluid.

You may use a pencil for graphs and diagrams only.

Write your name, centre number and candidate number in the spaces at the top of this page.

Answer **all** the questions in the spaces provided.

If you run out of space, use the additional page at the back of the booklet. Question numbers must be given for all work written on the additional page.

Take π as 3·14 or use the π button on your calculator.

INFORMATION FOR CANDIDATES

You should give details of your method of solution when appropriate.

Unless stated, diagrams are not drawn to scale.

Scale drawing solutions will not be acceptable where you are asked to calculate.

The number of marks is given in brackets at the end of each question or part-question.

In question **3**, the assessment will take into account the quality of your organisation, communication and accuracy in writing.

For Examiner's use only		
Question	**Maximum Mark**	**Mark Awarded**
1.	**3**	
2.	**2**	
3.	**6**	
4.	**9**	
5.	**3**	
6.	**2**	
7.	**2**	
8.	**4**	
9.	**4**	
10.	**5**	
11.	**4**	
12.	**4**	
13.	**7**	
14.	**8**	
15.	**3**	
16.	**3**	
17.	**2**	
18.	**5**	
19	**4**	
Total	**80**	

3300U401
01

NOV223300U40101

© WJEC CBAC Ltd.

Formula List – Intermediate Tier

Area of trapezium $= \frac{1}{2}(a + b)h$

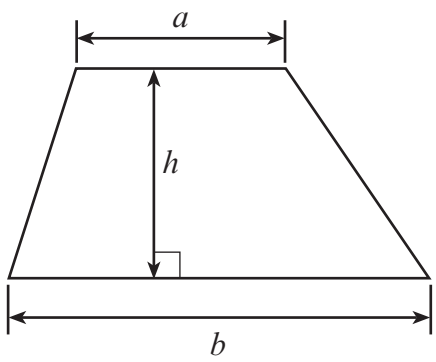

Volume of prism = area of cross-section × length

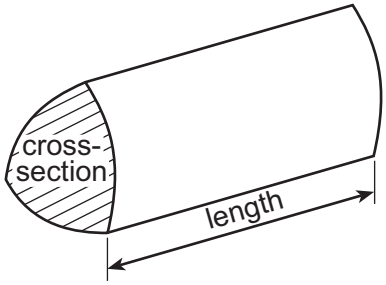

© WJEC CBAC Ltd.

Examiner only

1. (a) Enlarge the shape below by a scale factor of 3. [2]

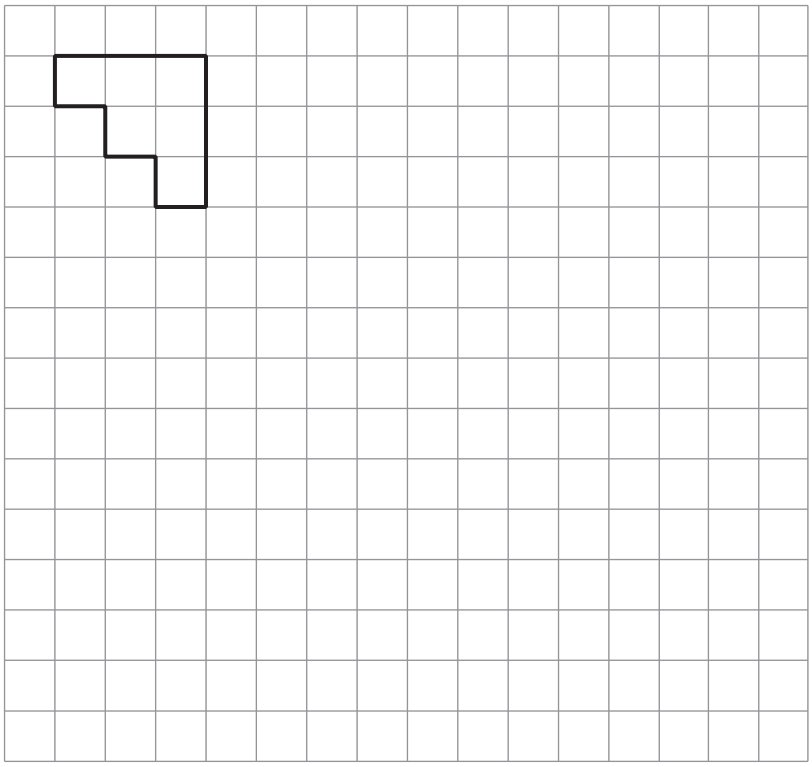

(b) Translate the shape below 2 squares to the left and 4 squares down. [1]

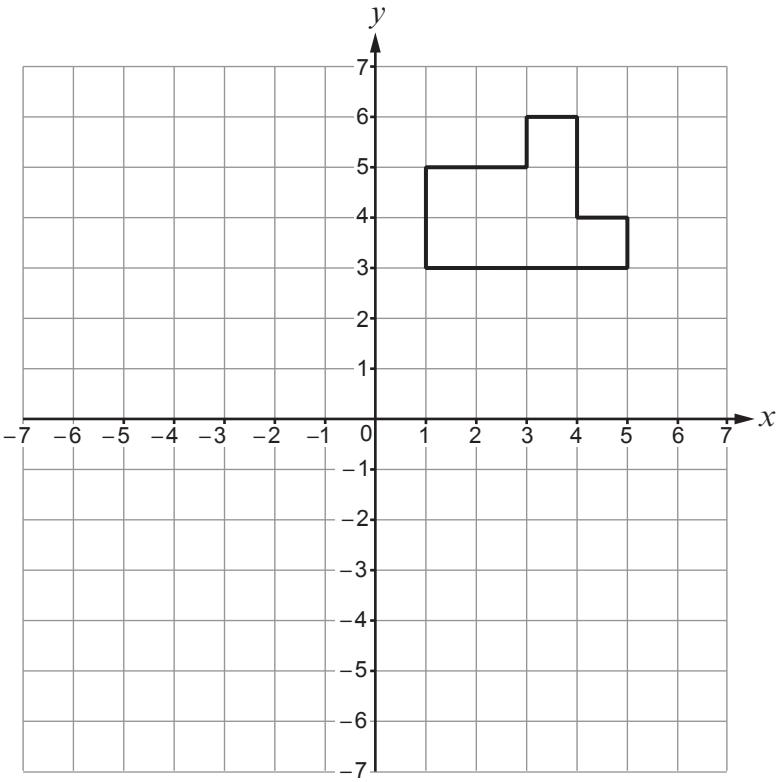

3300U401
03

© WJEC CBAC Ltd.

Examiner only

2. Calculate the value of $7p + 6q$ when $p = -9{\cdot}2$ and $q = 4{\cdot}7$. [2]

.....

.....

.....

.....

.....

.....

.....

© WJEC CBAC Ltd.

Examiner only

3. *In this question, you will be assessed on the quality of your organisation, communication and accuracy in writing.*

In the diagram below, *AF* is a straight line.

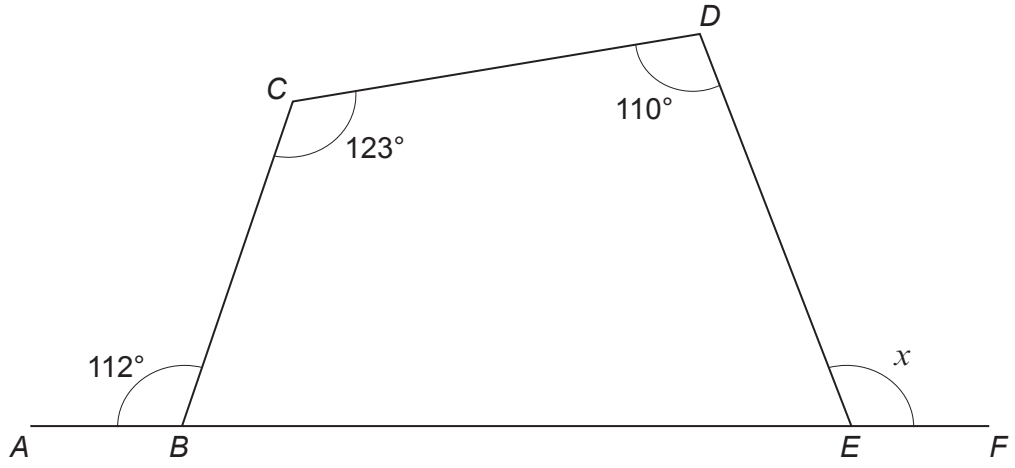

Diagram not drawn to scale

Calculate the size of angle x.
You must show all your working. [4 + 2 OCW]

3300U401 05

© WJEC CBAC Ltd.

Examiner only

4. Laura puts 90 counters in a bag.
Each counter is red or blue or yellow.

Laura wants to draw a pie chart to show the number of counters of each colour.
The table below shows some of the information that she needs.

	Number of counters	**Pie chart angle**
Red	25	.....
Blue	.....	180°
Yellow	.....	.....
	Total = 90	

(a) Complete the table.
You must show all your working. [5]

.....

.....

.....

.....

.....

.....

.....

.....

© WJEC CBAC Ltd.

Examiner only

(b) Complete the pie chart to show the results. [2]

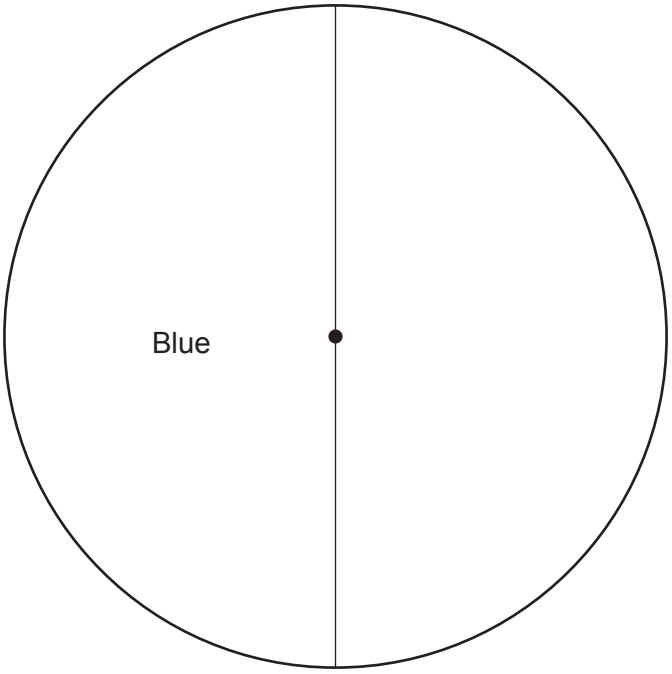

(c) Laura chooses a counter at random from the bag.
Calculate the probability that this counter is either red or blue. [2]

.....

.....

.....

.....

3300U401
07

© WJEC CBAC Ltd.

Examiner only

5. (a) Write 0·034 35 correct to two significant figures.
Circle your answer. [1]

0·03 0·033 0·0344 0·034 0·034 00

.....

(b) Convert 6·7 m^2 into cm^2.
Circle your answer. [1]

670 6700 67 000 670 000 6 700 000

.....

(c) Factorise $12e+15$.
Circle your answer. [1]

$27e$ $3(4e+5)$ $12(e+15)$ $5(12e+3)$ $15(0\cdot 8e+3)$

.....

© WJEC CBAC Ltd.

Examiner only

6. Find the whole number that satisfies all of the following conditions:

- It is a whole number between 15 and 35 inclusive.
- The number is a multiple of 2 but not a multiple of 4.
- 3 is a factor of this number, but 9 is **not** a factor of this number. [2]

.....

.....

.....

.....

.....

.....

.....

.....

The whole number is .....

7. Calculate $\dfrac{15 \cdot 4^2}{14 \cdot 59 - 7 \cdot 67}$, correct to 1 decimal place. [2]

.....

.....

.....

.....

3300U401 09

© WJEC CBAC Ltd.

Examiner only

8. 125 pupils were asked which one of four primary schools they attended.

(a) One of the pupils is chosen at random.

Complete the table below to find the probability that the pupil chosen went to Ysgol Bryn. [2]

	Ysgol Aber	Ysgol Bryn	Ysgol Castell	Ysgol Dewi
Probability	0·08	.....	0·2	0·28

.....

.....

.....

.....

(b) How many of the 125 pupils went to Ysgol Dewi? [2]

.....

.....

.....

.....

.....

.....

© WJEC CBAC Ltd.

Examiner only

9. Point *A* and point *B* are shown in the scale drawing below.

(a) Point *C* is 35 km from point *B* on a bearing of 300°.
Complete the scale drawing to show the position of point *C*. [2]

.....

Scale: 1 cm represents 5 km

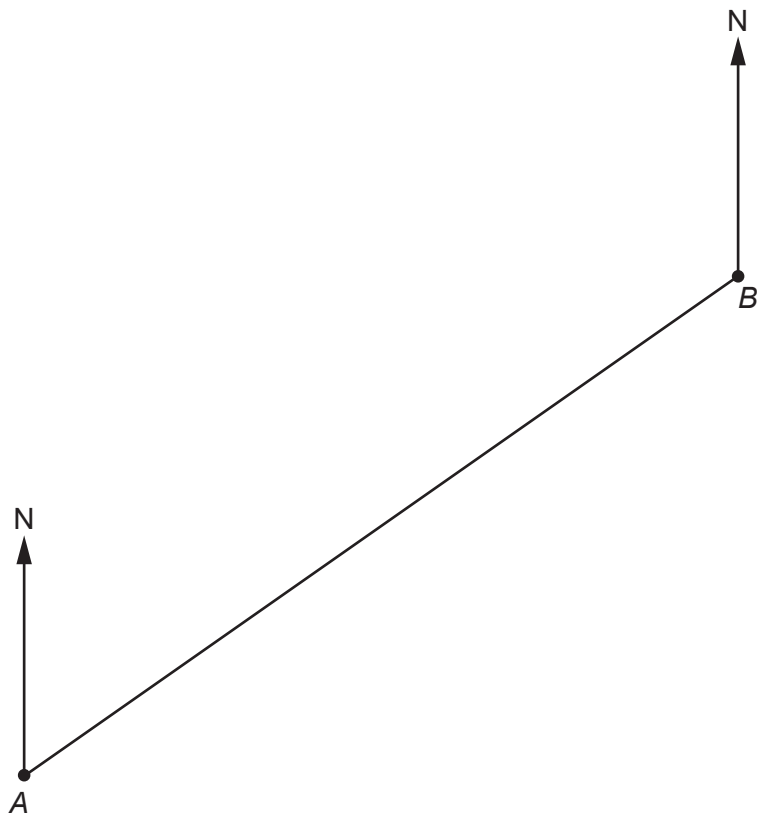

(b) Use your scale drawing to calculate
- the **actual** length of *AC*, in kilometres,
- the bearing of point *C* from point *A*. [2]

.....

.....

Actual length of *AC* = ... km

Bearing of point *C* from point *A* = ... °

3300U401
11

© WJEC CBAC Ltd.

Examiner only

10. (a) Express 21·76 as a percentage of 32. [2]

(b) Solve $5t + 3 = 3t + 14$. [3]

© WJEC CBAC Ltd.

Examiner only

11. A solid metal cylinder has a radius of 2·3 cm and a height of 5 cm.

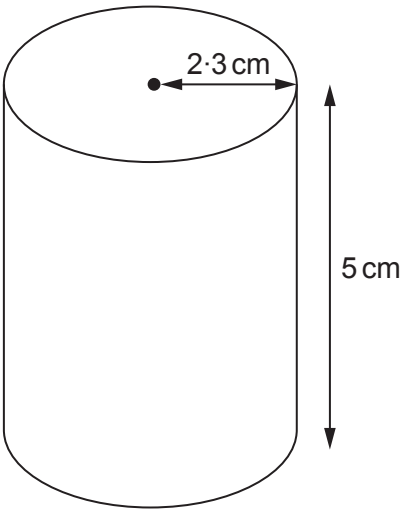

Diagram not drawn to scale

The mass of the cylinder is 423·1 g.

Find the density of the metal.
Give your answer in g/cm^3. [4]

© WJEC CBAC Ltd.

Examiner only

12. A solution to the equation

$$x^3 + 5x - 8 = 0$$

lies between 1 and 2.
Use the method of trial and improvement to find this solution correct to 1 decimal place.
You must show all your working. [4]

© WJEC CBAC Ltd.

Examiner only

13. *A*, *B* and *C* are points on the circumference of a circle with centre *O*.
The length of *BC* is 10 cm.
The diameter of the circle is 18 cm.

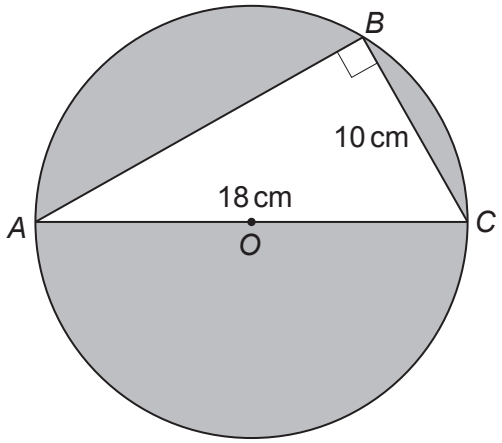

Diagram not drawn to scale

Calculate the shaded area.
You must show all your working. [7]

.....

.....

.....

.....

.....

.....

.....

.....

.....

.....

.....

.....

.....

.....

© WJEC CBAC Ltd.

Examiner only

14. (a) The rectangle below has:

- a length of $3y$
- a width of $y + a$
- an area of $3y^2 + 12y$.

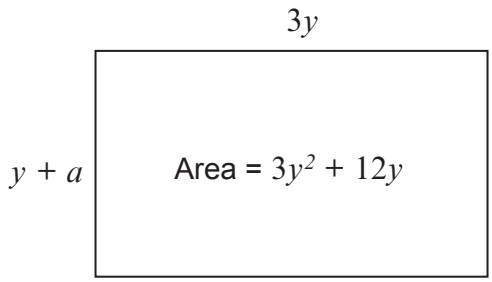

Diagram not drawn to scale

Find the value of a.
You must show all your working. [3]

.....

.....

.....

.....

.....

.....

.....

© WJEC CBAC Ltd.

Examiner only

(b) Another rectangle has a width of $4x - 10$.

(i) Given that x is a whole number, explain why the value of x cannot be less than 3. [1]

.....

.....

.....

.....

.....

.....

(ii) The perimeter of the rectangle is $14x - 4$.

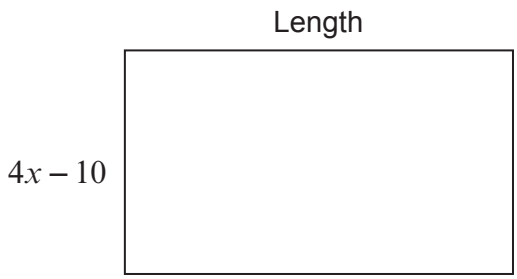

Diagram not drawn to scale

Find the length of the rectangle in **terms of x**. [4]

.....

.....

.....

.....

.....

.....

.....

.....

.....

© WJEC CBAC Ltd.

Examiner only

15. Calculate the length of the side *YZ* in the triangle *XYZ* shown below. [3]

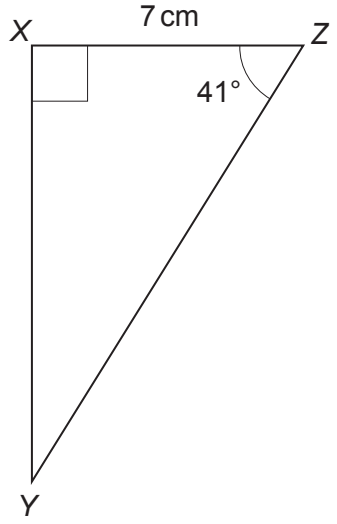

Diagram not drawn to scale

.....

.....

.....

.....

.....

.....

.....

.....

© WJEC CBAC Ltd.

Examiner only

16. Two times are recorded correct to the **nearest 0·1 second**.

12·4 seconds
25·5 seconds

Calculate the greatest possible difference between these times. [3]

.....

.....

.....

.....

.....

.....

.....

17. A number has been increased by 60% to give an answer of 64.
What was the original number? [2]

.....

.....

.....

.....

.....

.....

.....

© WJEC CBAC Ltd.

Examiner only

18. Bag A and Bag B contain only red and blue balls.

The probability of choosing a red ball from Bag A is $\frac{3}{5}$.

The probability of choosing a red ball from Bag B is 0·25.

A ball is chosen at random from each bag.

(a) Complete the tree diagram below. [2]

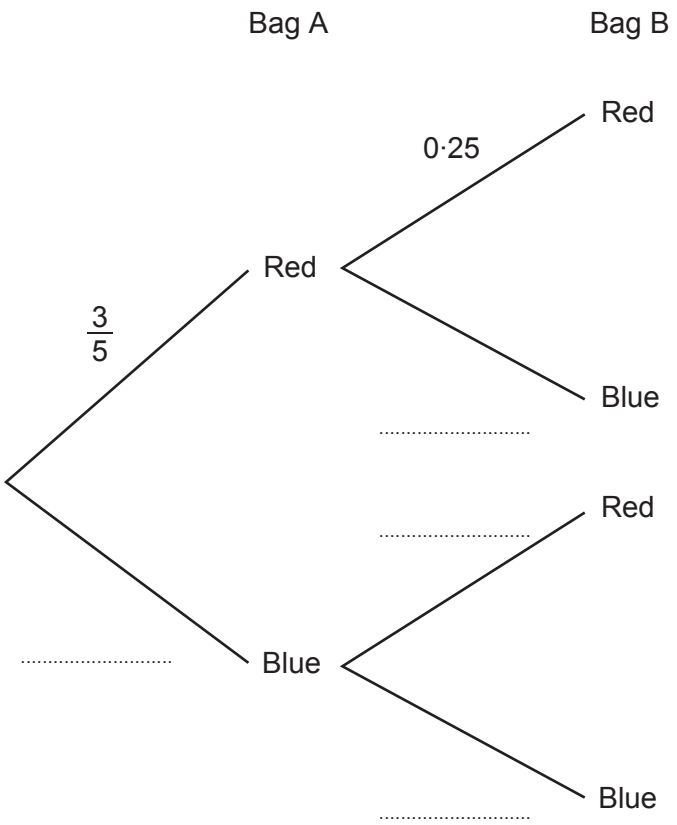

(b) Find the probability that the two balls chosen are the same colour. [3]

.....

.....

.....

.....

.....

.....

.....

© WJEC CBAC Ltd.

Examiner only

19. Solve the following simultaneous equations using an algebraic (not graphical) method.
Do not use a trial and improvement method.
You must show all your working. [4]

$$3x + 5y = -2$$
$$5x + 4y = -12$$

END OF PAPER

© WJEC CBAC Ltd.

Question number	Additional page, if required. Write the question number(s) in the left-hand margin.	Examiner only

© WJEC CBAC Ltd.

BLANK PAGE

PLEASE DO NOT WRITE ON THIS PAGE

© WJEC CBAC Ltd.

BLANK PAGE

PLEASE DO NOT WRITE ON THIS PAGE

© WJEC CBAC Ltd.