Surname	Centre Number	Candidate Number
First name(s)		0

GCSE

3300U30-1

A21-3300U30-1

MONDAY, 8 NOVEMBER 2021 – MORNING

MATHEMATICS
UNIT 1: NON-CALCULATOR
INTERMEDIATE TIER

1 hour 35 minutes

ADDITIONAL MATERIALS

The use of a calculator is not permitted in this examination.

A ruler, a protractor and a pair of compasses may be required.

INSTRUCTIONS TO CANDIDATES

Use black ink or black ball-point pen. Do not use gel pen or correction fluid.

You may use a pencil for graphs and diagrams only.

Write your name, centre number and candidate number in the spaces at the top of this page.

Answer **all** the questions in the spaces provided.

If you run out of space, use the additional page at the back of the booklet. Question numbers must be given for all work written on the additional page.

Take π as 3·14.

INFORMATION FOR CANDIDATES

You should give details of your method of solution when appropriate.

Unless stated, diagrams are not drawn to scale.

Scale drawing solutions will not be acceptable where you are asked to calculate.

The number of marks is given in brackets at the end of each question or part-question.

In question **6**, the assessment will take into account the quality of your linguistic and mathematical organisation, communication and accuracy in writing.

For Examiner's use only		
Question	**Maximum Mark**	**Mark Awarded**
1.	**5**	
2.	**3**	
3.	**3**	
4.	**5**	
5.	**3**	
6.	**7**	
7.	**3**	
8.	**3**	
9.	**5**	
10.	**3**	
11.	**5**	
12.	**4**	
13.	**3**	
14.	**5**	
15.	**3**	
16.	**5**	
17.	**5**	
Total	**70**	

3300U301
01

NOV213300U30101

© WJEC CBAC Ltd.

Formula List – Intermediate Tier

Area of trapezium $= \frac{1}{2}(a + b)h$

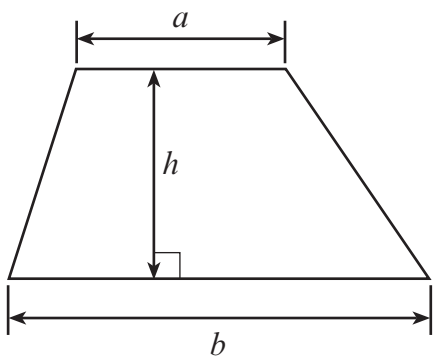

Volume of prism = area of cross-section × length

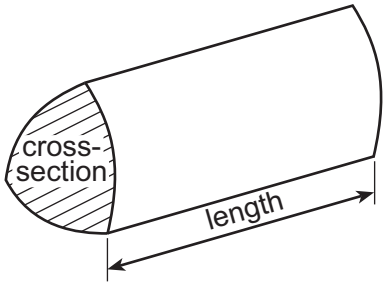

© WJEC CBAC Ltd.

Examiner only

1. *(a)* Calculate the size of angle x in the right-angled triangle shown below. [2]

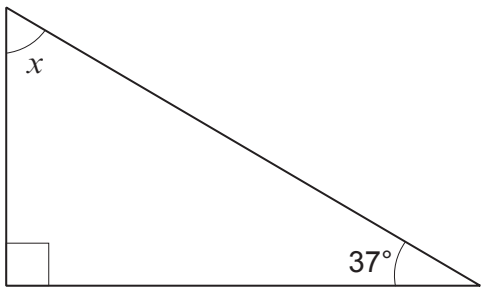

Diagram not drawn to scale

.....

.....

.....

(b) *ABCD* is a quadrilateral.
BE is a straight line.
Calculate the size of angles a and b. [3]

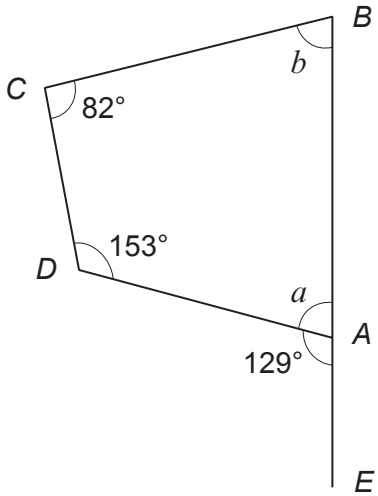

Diagram not drawn to scale

.....

.....

.....

.....

a = ... ° b = ... °

3300U301
03

© WJEC CBAC Ltd.

Examiner only

2. Circle the correct answer to complete each of the following statements.

(a) $\frac{1}{3}$ of $\frac{1}{3}$ is equal to [1]

$\frac{2}{3}$ $\frac{2}{6}$ $\frac{1}{6}$ $\frac{1}{9}$ $\frac{2}{9}$

.....

.....

(b) $0{\cdot}02 \times 0{\cdot}8$ is equal to [1]

0·016 0·16 1·6 0·4 4

.....

(c) 1·5% can be written as [1]

$1{\cdot}5^{100}$ 0·15 0·015 0·105 $1{\cdot}5^{10}$

.....

.....

3. *(a)* Calculate the value of $\frac{2}{5} \times \frac{1}{4}$.

Give your answer in its simplest form. [1]

.....

.....

.....

(b) Calculate the value of $3^3 \div 2^2$.
Give your answer as a decimal. [2]

.....

.....

.....

© WJEC CBAC Ltd.

Examiner only

4. A cuboid measures 5 cm by 3 cm by 2 cm.

(a) Calculate the volume of the cuboid.
Give your answer in cm^3. [2]

.....

.....

.....

Volume = ... cm^3

(b) Calculate the total surface area of the cuboid.
Give your answer in cm^2. [3]

.....

.....

.....

.....

.....

.....

Total surface area = ... cm^2

5. A number n is added to the square root of 81.
The answer is equal to 7 squared.

What is the value of n? [3]

.....

.....

.....

.....

.....

n = ...

3300U301
05

© WJEC CBAC Ltd.

Examiner only

6. *In this question, you will be assessed on the quality of your organisation, communication and accuracy in writing.*

Some letters are made using only straight lines e.g. T.
Some letters are made using straight lines and curved lines e.g. P.
Some letters are made using only curved lines e.g. S.

Six cards spell out the name BANGOR.

In a game, the six cards are placed in a bag.
One card is chosen at random.
The letter on the card is noted and the card is returned to the bag.

If the card has a letter on it that is made using only straight lines, the player gains 10 points.
A card with any other type of letter gains no points.

Leah plays the game 24 times.

Do you expect Leah to score a total of 100 points?
You must show all your working. [5 + 2 OCW]

.....

.....

.....

.....

.....

.....

.....

.....

.....

.....

.....

.....

.....

.....

© WJEC CBAC Ltd.

Examiner only

7. *AB* and *CD* are parallel.

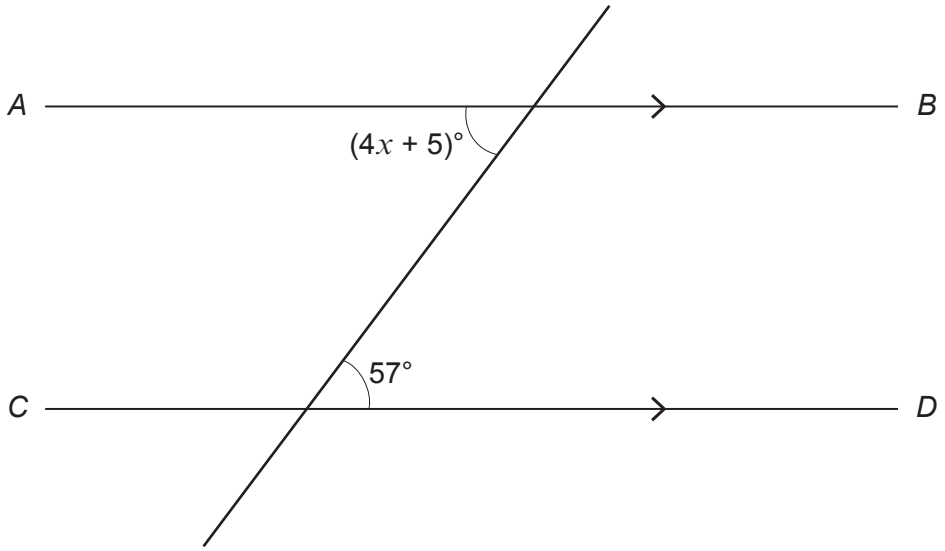

Diagram not drawn to scale

Calculate the value of x. [3]

.....

.....

.....

.....

8. Write down four positive whole numbers in the boxes below so that:

- the range of the numbers is 6,
- the mean of the numbers is 5,
- the median of the numbers is 4. [3]

.....

.....

.....

.....

.....

.....

3300U301 07

© WJEC CBAC Ltd.

Examiner only

9. *(a)* Express 54 miles as a percentage of 300 miles. [2]

.....

.....

.....

.....

(b) A car travels 100 miles in 2 hours and 30 minutes.
Calculate its average speed in miles per hour. [3]

.....

.....

.....

.....

.....

© WJEC CBAC Ltd.

Examiner only

10. The sizes of angles a and b in the triangle shown below are in the ratio 2 : 3.

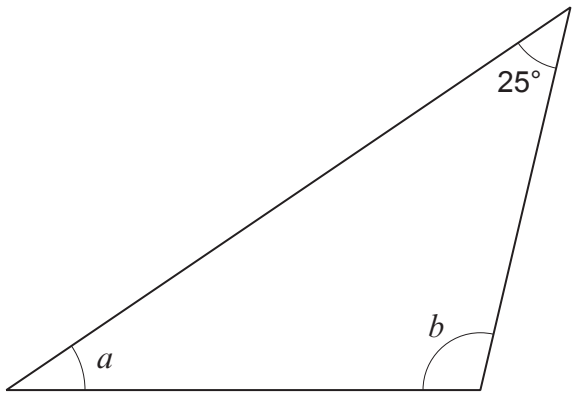

Diagram not drawn to scale

Calculate the size of each of the angles a and b.
You must show all your working. [3]

.....

.....

.....

.....

.....

.....

.....

.....

.....

.....

.....

a = ... ° b = ... °

© WJEC CBAC Ltd.

Examiner only

11. *(a)* Find the Lowest Common Multiple (LCM) of 60 and 72. [2]

.....

.....

.....

.....

.....

.....

.....

LCM of 60 and 72 is .....

(b) Express 882 as a product of its prime factors.
Give your answer in index form. [3]

.....

.....

.....

.....

.....

.....

.....

.....

.....

© WJEC CBAC Ltd.

Examiner only

12. Complete the table below.
Draw the graph of $y = 7 - x^2$ for values of x between −2 and 4.
Use the graph paper below. [4]

x	−2	−1	0	1	2	3	4
$y = 7 - x^2$	3		7	6	3		−9

.....

.....

.....

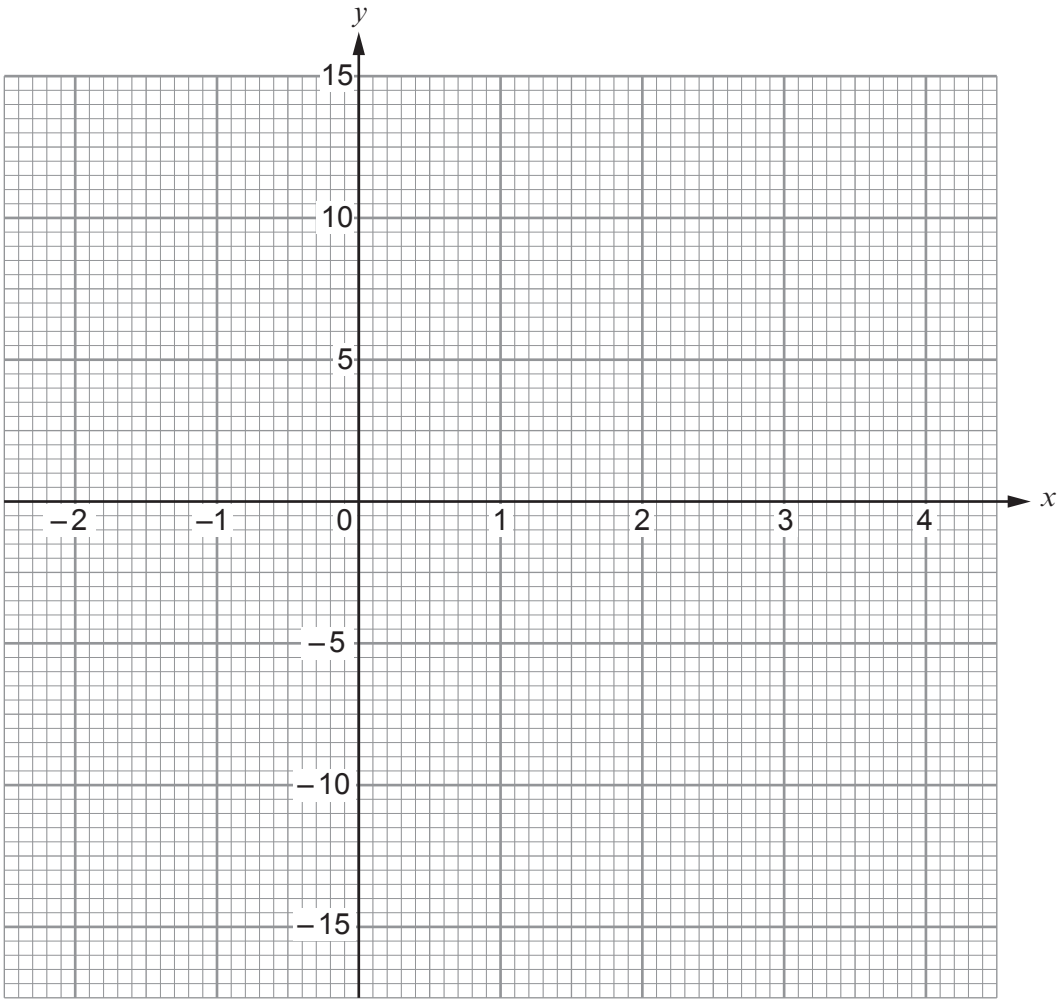

© WJEC CBAC Ltd.

Examiner only

13. Calculate the total perimeter of a semicircle of radius 4 cm.
Take π to be 3·14. [3]

.....

.....

.....

.....

.....

© WJEC CBAC Ltd.

Examiner only

14. *(a)* Rearrange the following formula to make k the subject.

$$p = 3k + 2$$ [2]

.....

.....

.....

.....

(b) Does the midpoint of the straight line joining points (3, 15) and (7, 19) lie on the line $y = 3x + 2$?
You must show all your working. [3]

.....

.....

.....

.....

.....

.....

.....

15. *(a)* Express 0·0058 in standard form. [1]

.....

(b) Calculate the value of $\dfrac{1{\cdot}4 \times 10^9}{2 \times 10^3}$.

Give your answer in standard form. [2]

.....

.....

.....

© WJEC CBAC Ltd.

Examiner only

16. A group of people have put their names forward to carry the Welsh flag at a sporting event. Each person lives in North Wales, Mid Wales or South Wales.

One person from the group is chosen at random.
The probability of choosing a person who lives in North Wales is 0·3.
The probability of choosing a person who lives in Mid Wales is 0·25.

The probability of choosing a person who is under 18 years old is 0·2.

The people's ages are independent of where they live.

(a) Complete the tree diagram shown below. [3]

.....

.....

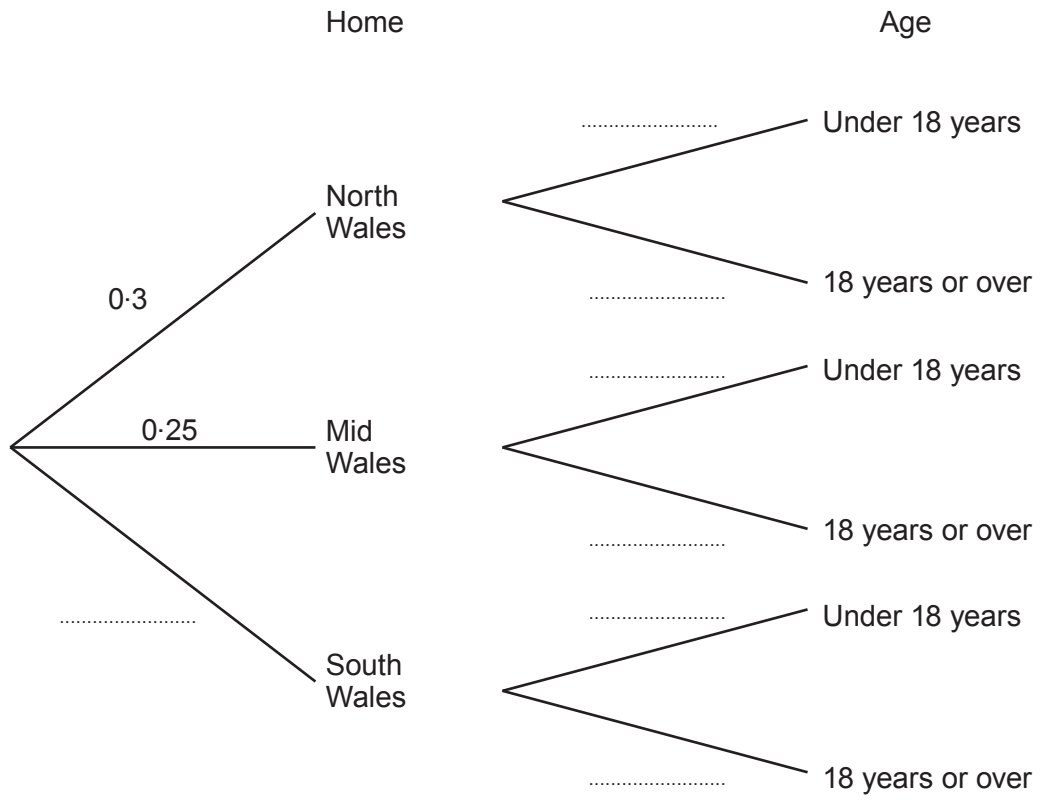

(b) What is the probability of choosing a person who lives in South Wales and is under 18 years old? [2]

.....

.....

.....

© WJEC CBAC Ltd.

Examiner only

17. The diagram below shows an isosceles triangle and a square.

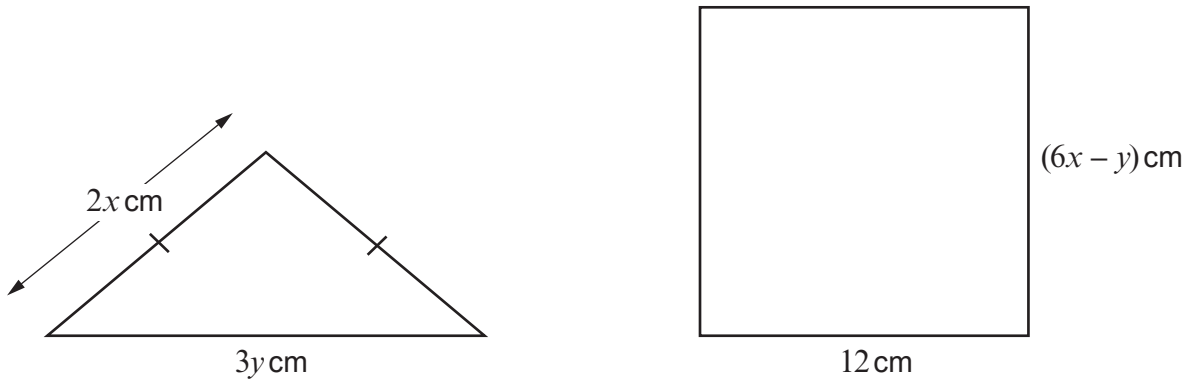

Perimeter of triangle = 19 cm

Diagram not drawn to scale

Use an algebraic method (not trial and improvement) to find the value of x and the value of y. You must show all your working. [5]

.....

.....

.....

.....

.....

.....

.....

.....

.....

.....

.....

.....

x = ... y = ...

END OF PAPER

© WJEC CBAC Ltd.

Question number	Additional page, if required. Write the question number(s) in the left-hand margin.

Examiner only

© WJEC CBAC Ltd.