Surname	Centre Number	Candidate Number
First name(s)		0

GCSE

3300U60-1

S24-3300U60-1

WEDNESDAY, 12 JUNE 2024 – MORNING

MATHEMATICS
UNIT 2: CALCULATOR-ALLOWED
HIGHER TIER

1 hour 45 minutes

ADDITIONAL MATERIALS

A calculator will be required for this examination.

A ruler, a protractor and a pair of compasses may be required.

INSTRUCTIONS TO CANDIDATES

Use black ink or black ball-point pen. Do not use gel pen or correction fluid.

You may use a pencil for graphs and diagrams only.

Write your name, centre number and candidate number in the spaces at the top of this page.

Answer **all** the questions in the spaces provided.

If you run out of space, use the additional page at the back of the booklet. Question numbers must be given for all work written on the additional page.

Take π as 3·14 or use the π button on your calculator.

INFORMATION FOR CANDIDATES

You should give details of your method of solution when appropriate.

Unless stated, diagrams are not drawn to scale.

Scale drawing solutions will not be acceptable where you are asked to calculate.

The number of marks is given in brackets at the end of each question or part-question.

In question **4**, the assessment will take into account the quality of your linguistic and mathematical organisation, communication and accuracy in writing.

For Examiner's use only		
Question	**Maximum Mark**	**Mark Awarded**
1.	**4**	
2.	**5**	
3.	**4**	
4.	**8**	
5.	**2**	
6.	**6**	
7.	**4**	
8.	**3**	
9.	**3**	
10.	**4**	
11.	**1**	
12.	**6**	
13.	**3**	
14.	**2**	
15.	**3**	
16.	**4**	
17.	**3**	
18.	**4**	
19.	**5**	
20.	**6**	
Total	**80**	

3300U601
01

JUN243300U60101

© WJEC CBAC Ltd.

Formula List – Higher Tier

Area of trapezium $= \frac{1}{2}(a + b)h$

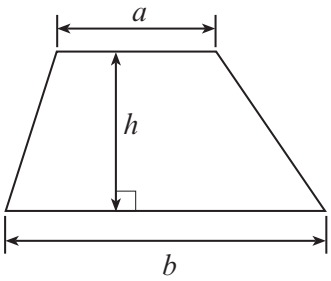

Volume of prism = area of cross-section × length

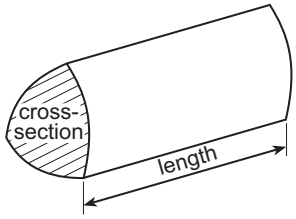

Volume of sphere $= \frac{4}{3}\pi r^3$

Surface area of sphere $= 4\pi r^2$

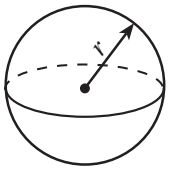

Volume of cone $= \frac{1}{3}\pi r^2 h$

Curved surface area of cone $= \pi r l$

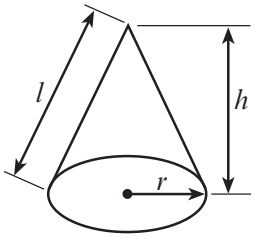

In any triangle ABC

Sine rule $\frac{a}{\sin A} = \frac{b}{\sin B} = \frac{c}{\sin C}$

Cosine rule $a^2 = b^2 + c^2 - 2bc \cos A$

Area of triangle $= \frac{1}{2}ab \sin C$

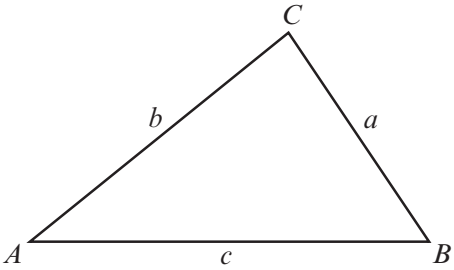

The Quadratic Equation

The solutions of $ax^2 + bx + c = 0$ where $a \neq 0$ are given by $x = \frac{-b \pm \sqrt{(b^2 - 4ac)}}{2a}$

Annual Equivalent Rate (AER)

AER, as a decimal, is calculated using the formula $\left(1 + \frac{i}{n}\right)^n - 1$, where i is the nominal interest rate per annum as a decimal and n is the number of compounding periods per annum.

© WJEC CBAC Ltd.

Examiner only

1. (a) Evaluate $\sqrt{0{\cdot}9^3 - 0{\cdot}9^4}$. [2]

.....

.....

.....

.....

(b) What is the greatest integer value of n if $2n < 17$? [1]

.....

.....

.....

.....

.....

Greatest integer value of n = ...

(c) What is the least integer value of n if $2^n > 125$? [1]

.....

.....

.....

.....

.....

Least integer value of n = ...

3300U601
03

© WJEC CBAC Ltd.

Examiner only

2. The table below shows some of the values of $y = 2x^2 + 5x - 3$ for values of x from -4 to 2.

x	-4	-3	-2	-1	0	1	2
$y = 2x^2 + 5x - 3$	9	0	-5	-6	-3		15

(a) Complete the table above. [1]

.....

.....

(b) On the graph paper opposite, draw the graph of $y = 2x^2 + 5x - 3$ for values of x from -4 to 2. [2]

(c) Draw the line $y = 6$ on the graph paper.
Write down the values of x where the line $y = 6$ cuts the curve $y = 2x^2 + 5x - 3$. [2]

Values of x are ..... and .....

© WJEC CBAC Ltd.

Examiner only

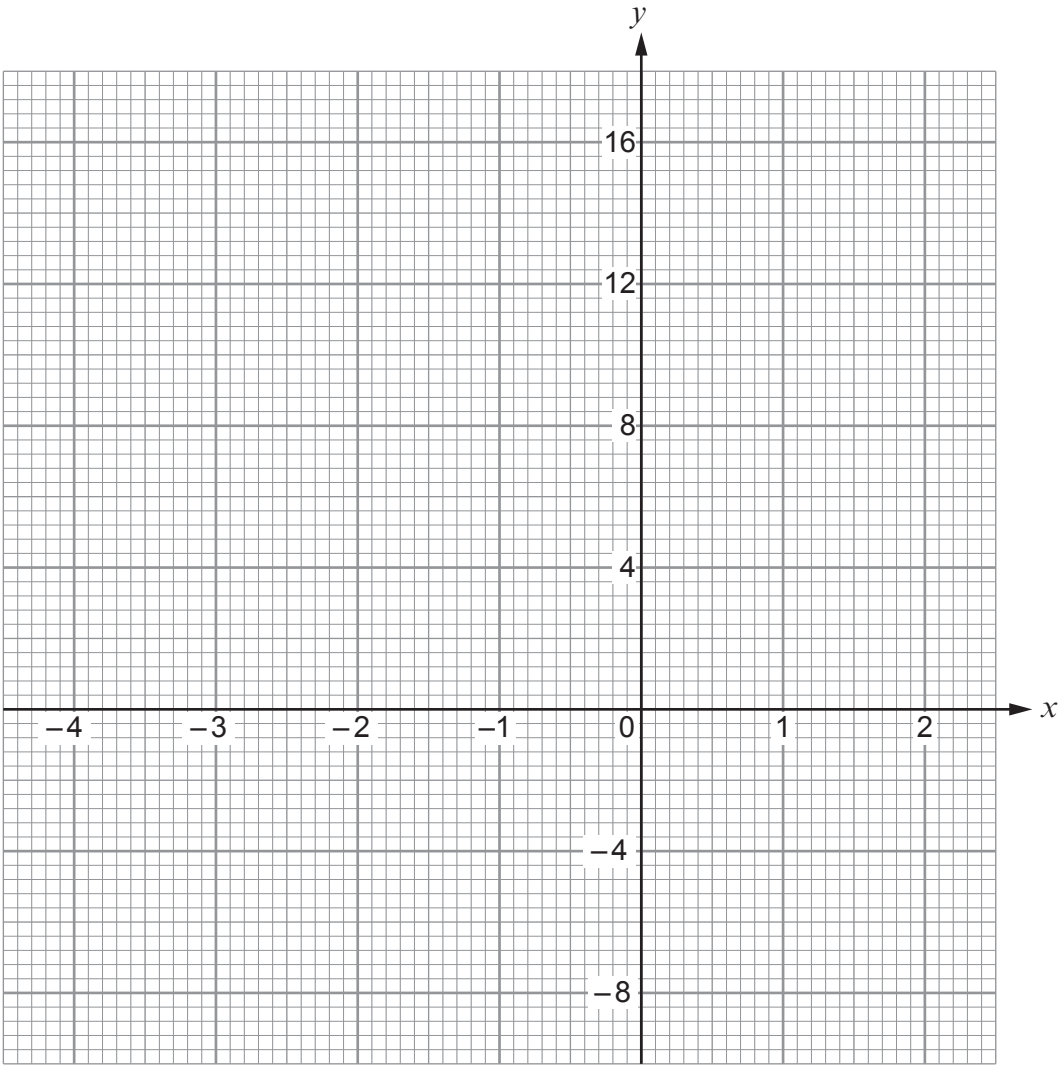

3300U601
05

© WJEC CBAC Ltd.

Examiner only

3. At lunchtime on Wednesday, a café had **19 customers**.

- 7 of these customers bought a meal **and** a drink.
- 2 of these customers did not buy a meal **or** a drink.
- The total number of customers who bought a meal was **twice** the total number of customers who bought a drink.

(a) Complete the Venn diagram below to show this information. [2]

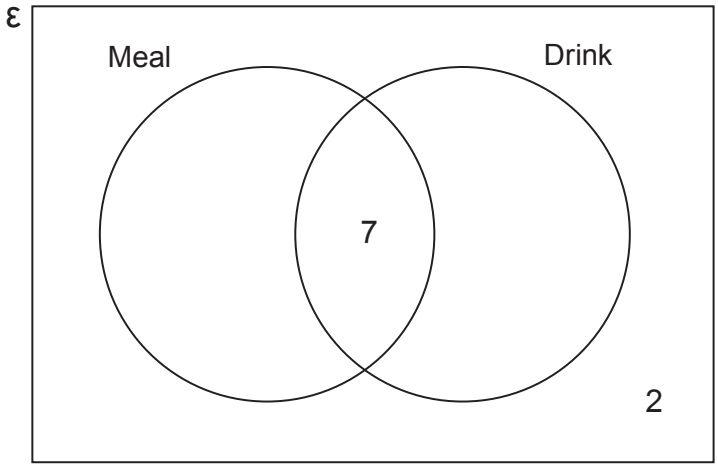

.....

.....

.....

.....

.....

.....

(b) One of these customers is chosen at random.
What is the probability that this customer bought a meal? [2]

.....

.....

.....

.....

© WJEC CBAC Ltd.

Examiner only

4. *In this question, you will be assessed on the quality of your organisation, communication and accuracy in writing.*

The diagram below shows a water container.
It is formed from an open rectangular tank with a solid cylinder attached to its base inside the tank.

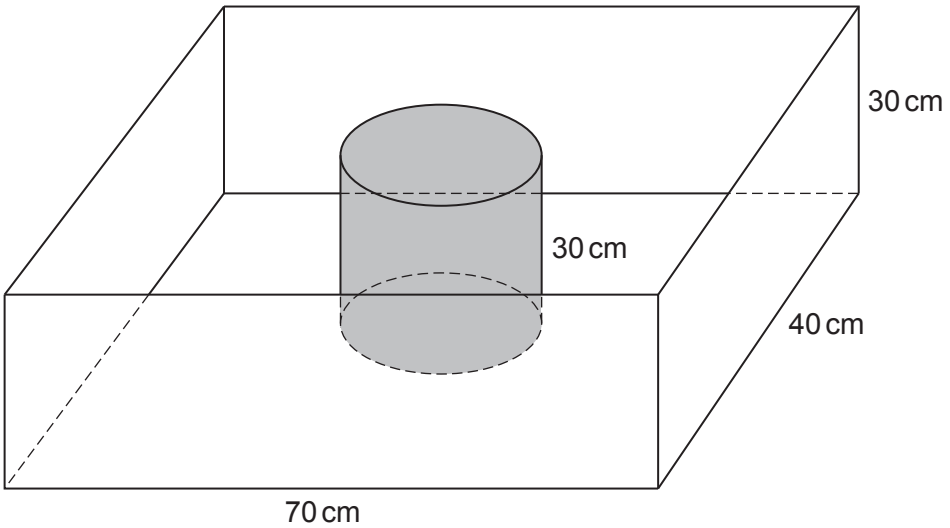

Diagram not drawn to scale

The base radius of the cylinder is 10 cm.
The height of the cylinder is 30 cm.

How many **litres** of water can the container hold?
You must show all your working. [6 + 2 OCW]

.....

.....

.....

.....

.....

.....

.....

.....

.....

.....

.....

.....

3300U601 07

© WJEC CBAC Ltd.

Examiner only

5. The equation of a straight line is $y = -3x + 7$.

(a) What is the gradient of the line?
Circle the correct answer. [1]

$\frac{1}{3}$ $\quad -\frac{1}{3}$ $\quad 3$ $\quad -3$ $\quad 7$

(b) What are the coordinates of the point where the line intersects the y-axis?
Circle the correct answer. [1]

(−3, 7) (0, −3) (0, 3) (0, −7) (0, 7)

© WJEC CBAC Ltd.

Examiner only

6. In the diagram below, *ABD* and *BCD* are both right-angled triangles.

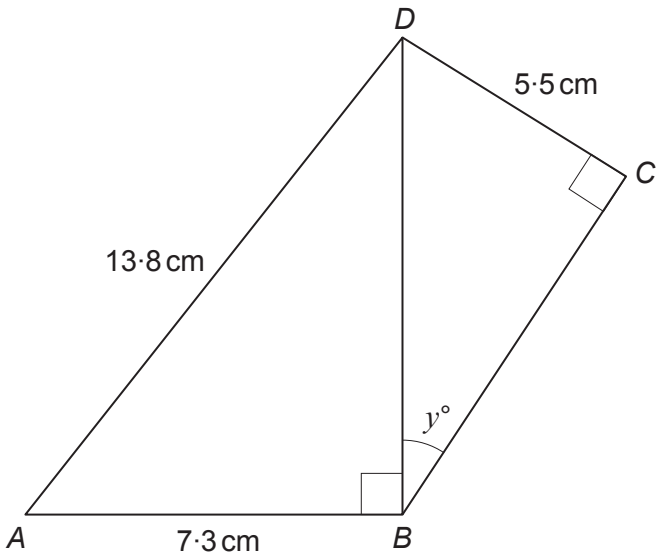

Diagram not drawn to scale

$AB = 7{\cdot}3$ cm, $AD = 13{\cdot}8$ cm and $CD = 5{\cdot}5$ cm.

Calculate the value of y. [6]

3300U601 09

© WJEC CBAC Ltd.

Examiner only

7. (a) The triangles shown below are similar.

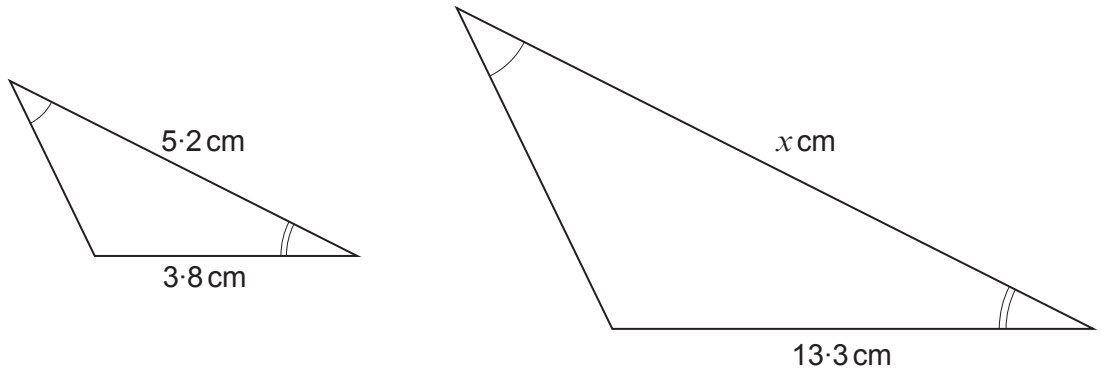

Diagrams not drawn to scale

Calculate the value of x. [2]

.....

.....

.....

.....

.....

.....

© WJEC CBAC Ltd.

Examiner only

(b) Four rectangles labelled **A**, **B**, **C** and **D** are shown below.

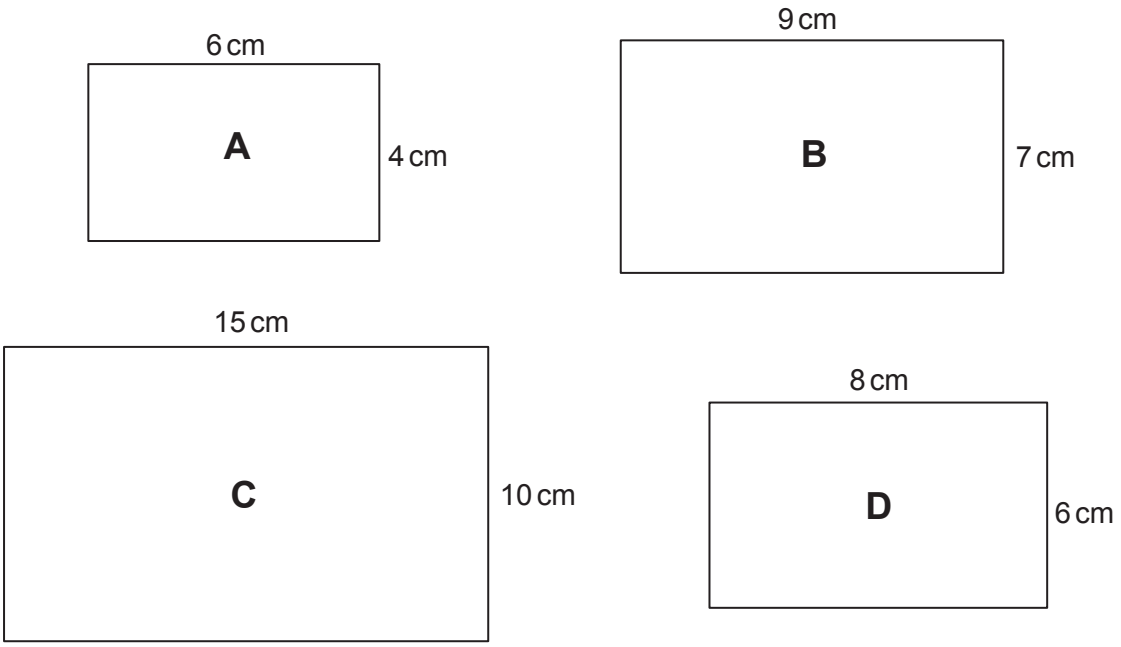

Diagrams not drawn to scale

Which two rectangles are similar?
Give a reason for your choice. [2]

The two rectangles which are similar are rectangles ..... and .....

Reason: .....

.....

.....

.....

3300U601
11

© WJEC CBAC Ltd.

Examiner only

8. Factorise $x^2 + 3x - 40$, and hence solve $x^2 + 3x - 40 = 0$. [3]

.....

.....

.....

.....

.....

.....

.....

.....

9. a and b are two numbers, where $b > a$.

The mean of the two numbers is equal to the range of the two numbers.

Show that $3a = b$. [3]

.....

.....

.....

.....

.....

.....

.....

.....

© WJEC CBAC Ltd.

Examiner only

10. Aled and Berwyn share £x in the ratio 2 : 3.

(a) Aled's share of the money is £0·4x.
What is Berwyn's share of the money in terms of x? [1]

.....

.....

(b) Carys and Delyth share the same amount, £x, in the ratio 3 : 7.

Show that one of these four people receives the same amount as the combined total of two of the other people. [3]

.....

.....

.....

.....

.....

.....

.....

.....

.....

.....

11. Write $\frac{1}{4} \times 2^{400}$ in the form 2^n. [1]

.....

.....

.....

© WJEC CBAC Ltd.

Examiner only

12. The pyramid below has a horizontal rectangular base *ABCD*.
The point *O* is the top of the pyramid. It is vertically above the point *A*.
OC = 113 cm, *AB* = 72 cm and *CB* = 84 cm.

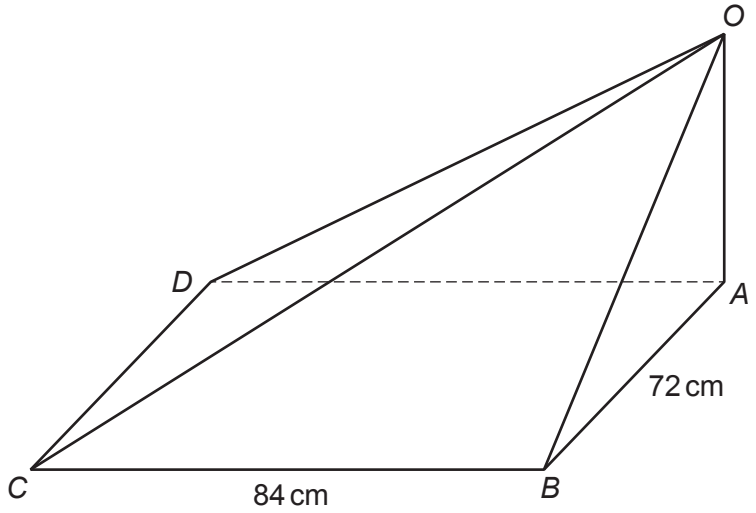

Diagram not drawn to scale

(a) Calculate the length of *OA*, the vertical height of the pyramid. [4]

.....

.....

.....

.....

.....

.....

.....

.....

.....

(b) Calculate the volume of this pyramid. [2]

.....

.....

.....

.....

.....

.....

© WJEC CBAC Ltd.

Examiner only

13. Using the axes below, find the region which satisfies the following inequalities:

$$y \geqslant 2$$
$$y \geqslant 2x - 10$$
$$y \leqslant x$$

Make sure that you clearly indicate the region that represents your answer. [3]

.....

.....

.....

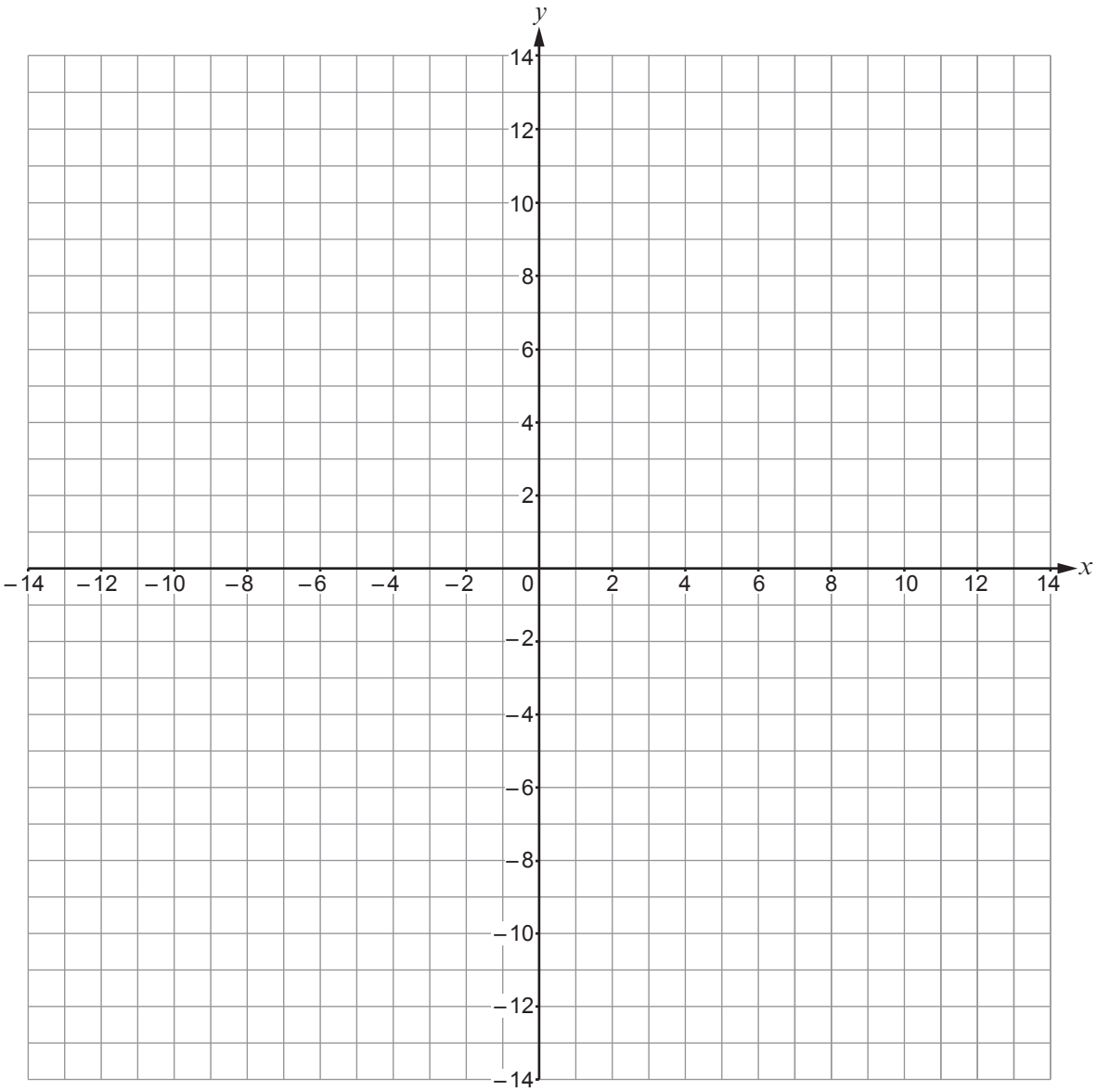

© WJEC CBAC Ltd.

Examiner only

14. Triangle ABC has sides AB = 24·1 cm and AC = 17·9 cm, as shown below.
$B\hat{A}C$ = 37°.

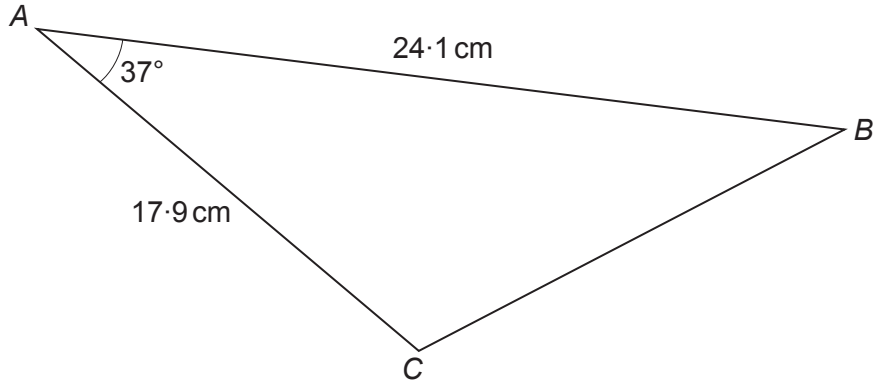

Diagram not drawn to scale

Calculate the area of the triangle ABC. [2]

.....

.....

.....

.....

.....

15. The values e = 7·1, f = 73·9 and g = 65·7 are each given correct to 1 decimal place.

The value of h is found using the formula $h = \dfrac{e}{f - g}$.

Calculate the **greatest** value of h.
Give your answer correct to four decimal places.
You must show all your working. [3]

.....

.....

.....

.....

.....

.....

.....

© WJEC CBAC Ltd.

Examiner only

16. (a) Sketch the curve $y = \cos x$ on the axes below, for values of x from 0° to 360°.
You must indicate any important values on both axes. [2]

(b) Solve the equation $2\cos x = 1$.
Give all answers in the range x = 0° to x = 360°. [2]

.....

.....

.....

.....

.....

.....

.....

.....

.....

.....

© WJEC CBAC Ltd.

Examiner only

17. Zoltan rolls three unbiased 6-sided dice.
Calculate the probability that the sum of the values shown on the dice is 17. [3]

.....

.....

.....

.....

.....

.....

.....

.....

.....

.....

© WJEC CBAC Ltd.

Examiner only

18. Two **similar** prisms have volumes of $569\,cm^3$ and $3821\,cm^3$, as shown below.
The uniform cross-sectional area of the smaller prism is $29\,cm^2$.

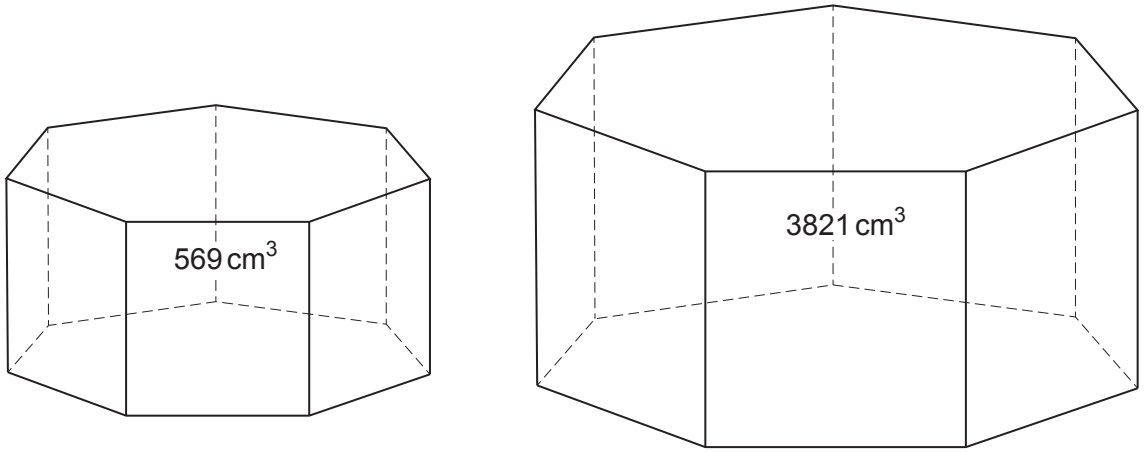

Diagram not drawn to scale

Calculate the uniform cross-sectional area of the larger prism. [4]

.....

.....

.....

.....

.....

.....

.....

.....

.....

.....

.....

.....

.....

.....

.....

.....

© WJEC CBAC Ltd.

Examiner only

19. Solve the equation $7x(x + 3) + 1 = x(x + 2)$.
You must use the quadratic formula and show all your working.
Give your answers correct to 2 decimal places. [5]

© WJEC CBAC Ltd.

Examiner only

20. In the diagram below, AB = 13 cm, AD = 17 cm, BC = 19 cm and DC = 11 cm.

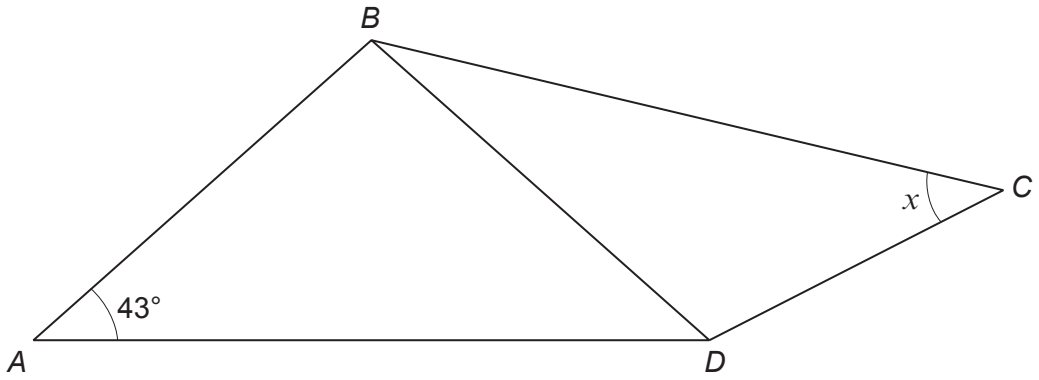

Diagram not drawn to scale

Calculate the size of angle x.
You must show all your working. [6]

.....

.....

.....

.....

.....

.....

.....

.....

.....

.....

.....

.....

.....

.....

.....

END OF PAPER

© WJEC CBAC Ltd.

Question number	Additional page, if required. Write the question number(s) in the left-hand margin.	Examiner only

© WJEC CBAC Ltd.

BLANK PAGE

PLEASE DO NOT WRITE ON THIS PAGE

© WJEC CBAC Ltd.

BLANK PAGE

PLEASE DO NOT WRITE ON THIS PAGE

© WJEC CBAC Ltd.