WJEC A-LEVEL PHYSICS · UNIT 3

PHYSICS

EXAM QUESTION PACK

3.1 CIRCULAR MOTION

SCORE	PERCENTAGE
/117	%

STEMUP

These questions belong to WJEC, not to us.

The examination questions, mark schemes and examiner comments in this pack were written and published by WJEC. They are past assessment materials, reproduced here so that students can revise from them.

What we do not own

STEMUP is not affiliated with WJEC and does not own, and makes no claim to own, any of the question, mark scheme or examiner report material in this pack. WJEC has not endorsed, approved or been involved in the production of it. WJEC and the qualification titles used here belong to their respective owners and appear for identification only.

Where to find the originals

WJEC publishes its past papers, mark schemes and examiner reports free of charge. Always check the current specification at wjec.co.uk before you revise, because content and wording can change between series.

If you hold the rights to any material in this pack and would like it amended or removed, contact admin@stemup.co.uk and we will act on it.

#1

(a) The drum of a top-loading washing machine spins around a vertical axis. The drum has a radius of 0.25 m and spins at a rate of 1 200 revolutions per **minute**.

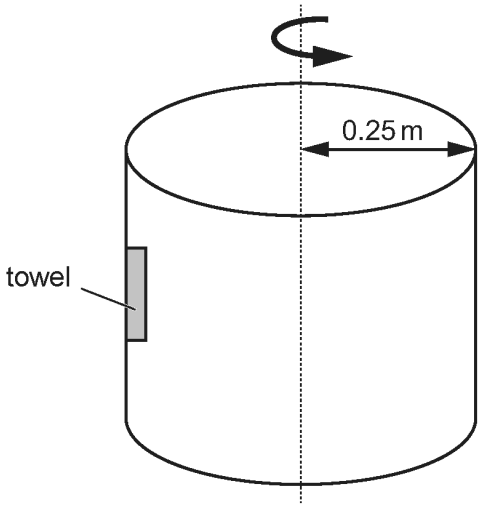

Determine the centripetal force on a damp towel, of mass 0.8 kg, on the inner wall of the drum. [4]

.....

.....

.....

.....

.....

.....

(b) The drum of a front-loading washing machine also has a radius of 0.25 m and spins at the same rate of 1 200 revolutions per minute.

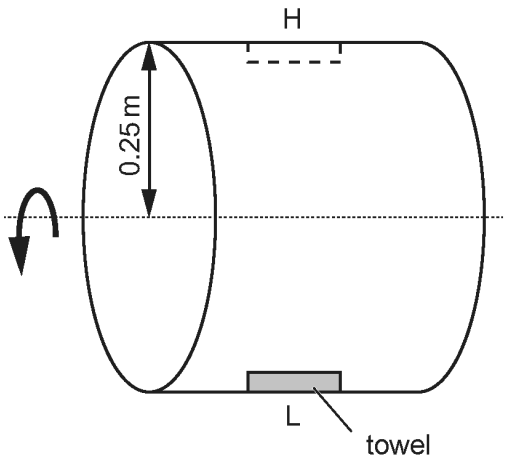

By considering the forces on the towel, determine the force exerted by the wall of the drum on the towel when the towel is at its:

(i) lowest point in the rotation (L); [2]

.....

.....

.....

.....

(ii) highest point in the rotation (H). [1]

.....

.....

.....

(c) As the drum spins, the lid of a nearby saucepan is heard to vibrate. The vibration reduces when the spinning rate decreases. Explain both of these effects. [2]

.....

.....

.....

.....

.....

Question taken from WJEC examination paper 132401, June 2015

1. *(a)* A car travels at a constant speed of 45.0 km h^{-1} around a curve in the road with a radius of 80 m.

(i) Explain why the car is accelerating. [2]

.....

.....

.....

.....

(ii) Calculate the angular velocity of the car (in rad s^{-1}) as it travels around the curve. [2]

.....

.....

.....

.....

(iii) Calculate the acceleration of the car and state its direction. [3]

.....

.....

.....

.....

(b) Discuss how the application of science enables cars to travel safely around curves. [2]

.....

.....

.....

.....

Question taken from WJEC examination paper 242701, June 2018

#3

(a) The pendulum in the figure below has a small bob of mass, m, suspended at the bottom of a light string of length, l. The string is shown at an angle, θ, to the vertical and the mass, m, is at a distance, s, along the arc. The forces acting on the mass are shown.

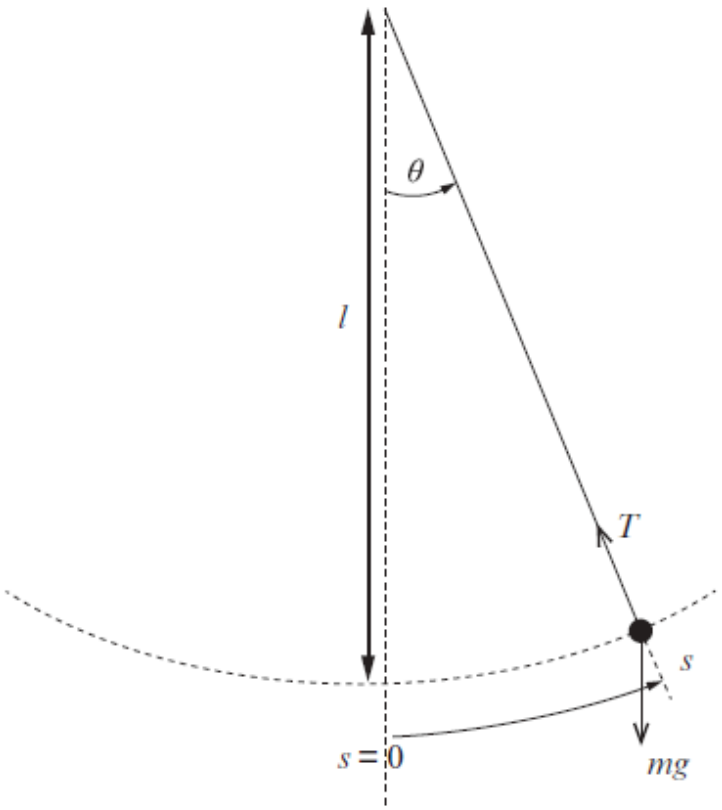

(i) Name the **two** forces acting on the mass. [1]

.....

.....

(ii) By considering these forces show that:

resultant force component on the mass along the arc = $-mg\ \sin\theta$

You may add to the diagram if you wish. [3]

.....

.....

.....

.....

.....

.....

(iii) If the oscillation is small so that $\sin\theta \simeq \theta$ show in clear steps that the acceleration along the arc may be written as: [2]

$$\text{acceleration} = -\frac{gs}{l}$$

STEMUP.CO.UK

.....

.....

.....

.....

(iv) Discuss whether the equation in part *(a)*(iii) satisfies the definition of simple harmonic motion. [2]

.....

.....

.....

(b) A small mass oscillates at the lower end of a pendulum of length 1.20 m.

(i) Determine its:

I. period; [2]

.....

.....

.....

II. frequency. [1]

.....

.....

(ii) If the maximum displacement angle of the mass is 0.067 rad, justify the use of simple harmonic motion in part *(b)*(i). [2]

.....

.....

.....

.....

.....

Question taken from WJEC examination paper 242701, June 2017

2. A fairground ride consists of a large empty cylinder of radius 2.80 m with its axis of rotation vertical. A person of mass 66.2 kg walks into the cylinder and stands against its inner wall. The cylinder is rotated around the axis. When the rotation rate is 36.0 revolutions per minute the floor is lowered, but the person remains fixed in place against the wall.

This is a student's diagram.

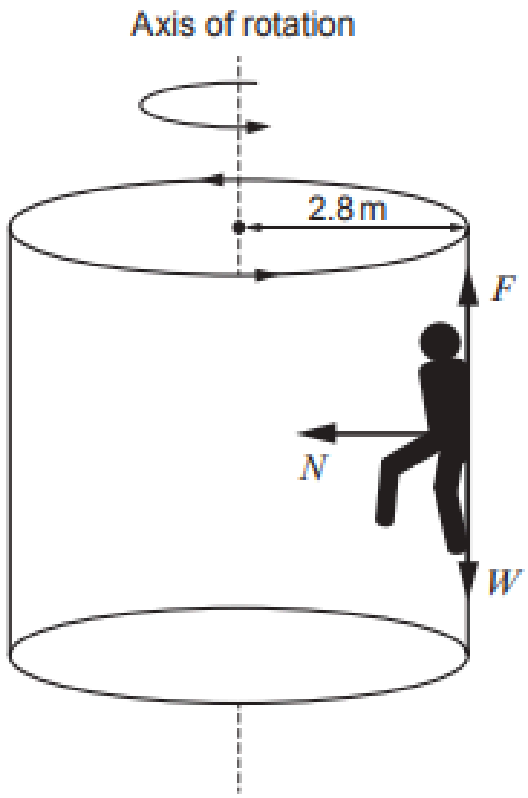

(a) Define the *radian*. [1]

.....

.....

.....

(b) Calculate:

(i) the period of rotation, T; [2]

.....

.....

.....

(ii) the speed, v, at which the person is moving in the circle. [2]

.....

.....

.....

(c) Three forces act on the person: the normal contact force from the wall, N, the weight, W, of the person, and the frictional force, F, from the wall. These are shown in the student's diagram.

Explain why the values of N and F are approximately 2 600 N and 650 N respectively. [4]

.....

.....

.....

.....

.....

.....

.....

(d) The maximum value that a frictional force can take is μN where μ is a dimensionless constant.

(i) Show that the person does not slide down the wall provided that μ is larger than approximately 0.25. [2]

.....

.....

.....

(ii) A student says that as the cylinder slows down the floor will need to be raised to support the person when the angular velocity reduces below a certain value. Justify this and determine this angular velocity if μ has a value of 0.45. [4]

.....

.....

.....

.....

.....

.....

.....

.....

#5 A rod is attached vertically to a horizontal turntable at point **P**, 0.080 m from the centre **Q**.

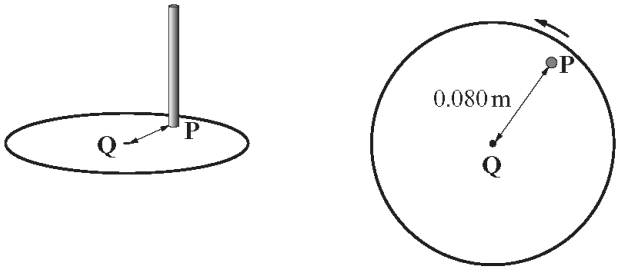

view from above

(a) (i) The turntable rotates around **Q** at 45 rotations per minute. Show that its angular speed ω is 4.71 rad s^{-1}. [2]

.....

.....

.....

(ii) Calculate the speed v of the rod. [2]

.....

.....

.....

(iii) Calculate the acceleration of the rod. [2]

.....

.....

.....

(iv) State the direction of the acceleration of the rod. [1]

.....

Question taken from WJEC examination paper 132401, June 2013

#6

A piece of string is threaded through a hollow narrow cylinder. Two small objects, P and Q, with masses 0.010 kg and 0.090 kg respectively are attached to the ends of the string, as shown.

A student holds the cylinder and sets the 0.010 kg mass rotating in a horizontal circle of radius R, which is kept constant at 0.50 m. The time for 10 rotations is recorded. The tension in the string provides both the centripetal force on P and an upward force to hold Q in equilibrium.

The measurement is repeated for different values of R. All measurements are recorded in the table overleaf.

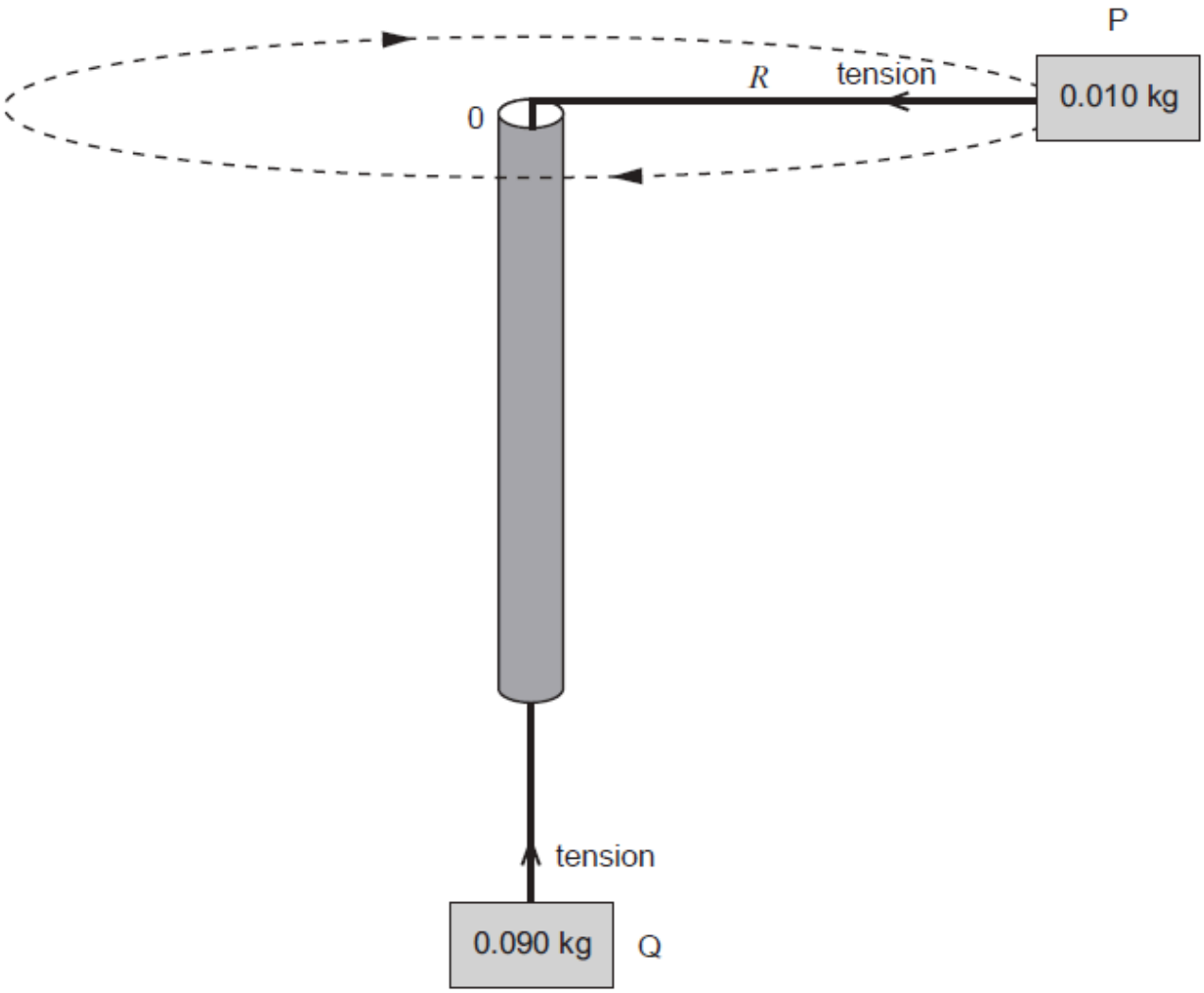

(a) Show that the speed, v, of mass P for each measurement is given by:

$v = \dfrac{2\pi R}{T}$ where T is the period of rotation. [1]

.....

.....

.....

.....

(b) Complete the table. [4]

R / m	Time for 10 rotations / s	Period T / s	v / m s^{-1}	v^2 / m^2 s^{-2}

STEMSP.CO.UK

0.50	4.7			
0.60	5.2			
0.70	5.6			
0.80	6.0			
0.90	6.3			

(c) (i) Assuming that OP is horizontal, write an equation relating the centripetal force to v and R. [2]

.....

.....

(ii) Hence, by using the equation for the forces acting on mass Q, show that:

$$v^2 = 9g\,R$$

where g is the acceleration due to gravity. [3]

.....

.....

.....

.....

.....

.....

(d) (i) Use the data in the table to plot a graph of v^2 (y-axis) against R (x-axis). [4]

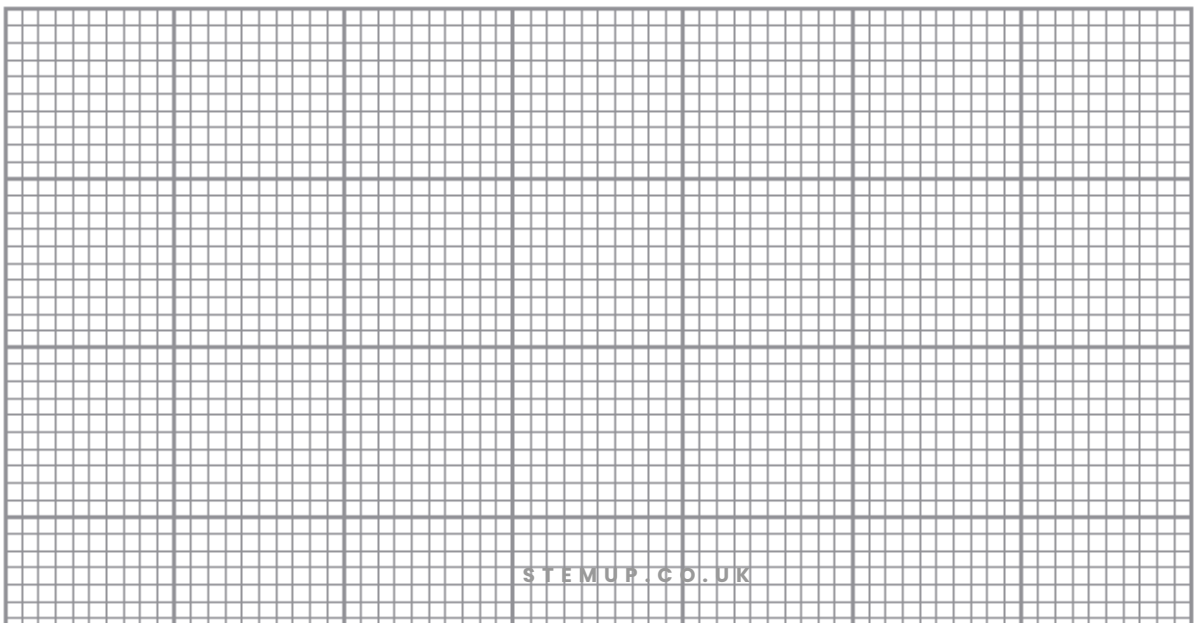

(ii) Determine a value for g. [3]

.....

.....

.....

.....

(iii) Suggest a way in which the experiment can be improved. [1]

.....

.....

Question taken from WJEC examination paper 242701, June 2017

#7

A child stands on a park roundabout as it rotates with a constant angular speed of $1.40\ \text{rad s}^{-1}$.

The child's mass is 32.5 kg and she stands a distance r from the centre of the roundabout.

(a) Show that the frictional force exerted on the child is given by $F = 63.7\,r$, where F is in newtons and r is in metres. [3]

.....

.....

.....

(b) The maximum possible value of the frictional force is 114 N. Explain briefly why the child cannot stand further than about 1.80 m from the centre of the roundabout. [2]

.....

.....

.....

As the Sun sets, the girl's shadow is cast on a wall. The shadow now performs simple haromic motion with an amplitude of 1.80 m with $\omega = 1.40\ \text{rad s}^{-1}$.

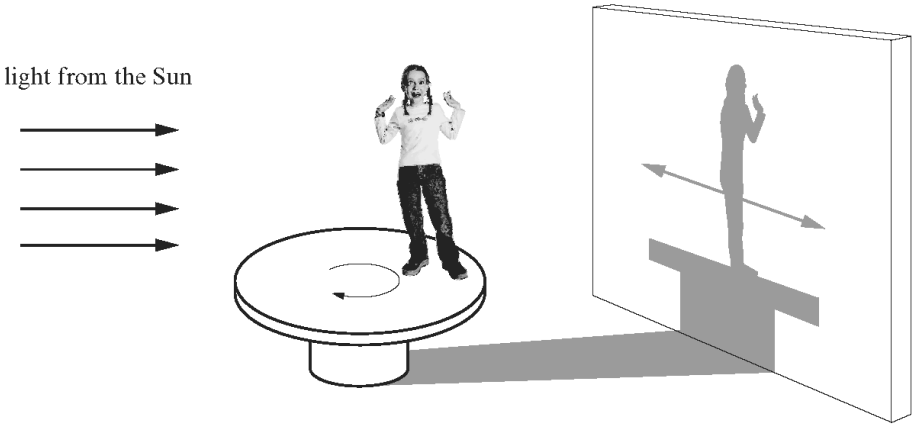

(c) Calculate the period of oscillation. [2]

.....

.....

(d) Calculate the maximum speed of the shadow. [2]

.....

.....

.....

(e) Calculate the maximum acceleration of the shadow and state where this occurs. [3]

.....

.....

.....

.....

(f) At time $t = 0$, the shadow is at the centre of its motion and moving in the positive x-direction. Sketch a graph of the shadow's displacement against time on the grid below. [2]

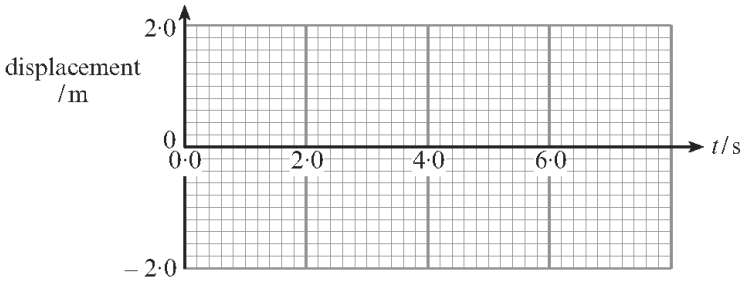

(g) Calculate, using an appropriate equation, **two** values of t within the first six seconds when the displacement of the shadow is –1.00 m. [4]

.....

.....

.....

.....

.....

Question taken from WJEC examination paper 132401, January 2011

#8

The planet (Kepler-186f) orbits the star (Kepler-186) and is considered to be the most Earth-like planet yet discovered. Approximate details of the system are shown in the diagram below.

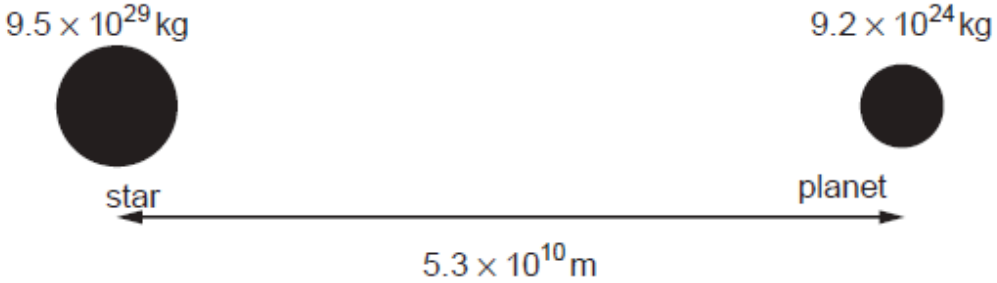

(a) (i) Show that the radius of orbit of the star around the centre of mass of the system is 513 km. [2]

.....

.....

.....

.....

.....

(ii) The period of orbit of the planet is 130 days. Calculate the orbital velocity of the star. [3]

.....

.....

.....

.....

.....

(iii) The velocity calculated in part *(a)*(ii) is small. Explain why small velocities are difficult to measure using red shift. [2]

.....

.....

.....

.....

(b) (i) Calculate the gravitational force between the star and the planet. [2]

.....

.....

.....

.....

(ii) An historic alternative to Newton's Law of Gravitation involved invisible steel rods connecting stars and planets and providing the force for keeping planets in orbit. A hypothetical cylindrical steel rod of radius 7.0×10^6 m and length 5.3×10^{10} m joins the planet to the star. Determine whether or not this steel rod is strong enough to keep the planet in orbit and explain why this theory is not accepted. (Breaking stress of steel = 4.5×10^8 Pa.) [4]

.....

.....

.....

.....

.....

.....

.....

.....

(c) (i) Calculate the potential energy of the star-planet system (see diagram in part *(a)*). [2]

.....

.....

.....

.....

(ii) In fact the planet has a slightly elliptical orbit. Explain how conservation of energy applies to this elliptical orbit. [2]

.....

.....

.....

.....

Question taken from WJEC examination paper 242801, June 2017

#1

Question			Marking details	Marks Available
5	*(a)*		$\omega = \frac{2\pi(1200)}{60}$ (conversion of units (1)) $= 125.7$ [rad s^{-1}] (1) $F = m\omega^2 r = (0.80)(125.7)^2(0.25)$(subs (1)) $= 3160.1$ [N] (1)	4
	(b)	(i)	$R - mg = 3\ 160.1$ (1) $R = 3\ 160.1 + (0.8)(9.81) = 3\ 168$ [N] (1) **ecf** from (a)	
		(ii)	$R + mg = 3\ 160.1$ $R = 3\ 160.1 - (0.8)(9.81) = 3\ 152$ [N] (1) **ecf** from (a)	3
	(c)		Resonance – frequency of rotation matches the natural / resonant frequency of vibration of the saucepan [lid] (1) [When the spin rate decreases,] the frequencies no longer match / so no resonance (1)	2
			Question 5 Total	**[9]**

#2

Question			Marking details	Marks available AO1	AO2	AO3	Total	Maths	Prac
1	*(a)*	(i)	Velocity [of car] is changing [with time] (1) because its direction is changing [so the car is accelerating] (1) or There is a resultant force (1) [towards the centre] due to friction / grip (1)	2			2		
		(ii)	$v = \frac{45\times10^3}{60\times60} = 12.5$ m s^{-1} (conversion) (1) $\omega = \frac{v}{r} = \frac{12.5}{80} = 0.156$ rad s^{-1} substitution and calculation (1)		2		2	2	
		(iii)	$a = \frac{v^2}{r} = \frac{(12.5)^2}{80}$ substitution (ecf) (1) [Alt: use $a=\omega^2 r$] $= 1.95$ m s^{-2} (1) Direction: towards centre (of 'circular' motion) (1)	1 1	1		3	2	
	(b)		Either: Any two × (1) of these points - Appropriate tyre design for friction - Banking of road [for contribution from normal contact force] - Appropriate surface - Suspension set-up - Anti-roll bars. (or any sensible answers, one referring to road and the other to the car) Or any one sensible point (1) + explanation of the role of physics (1) [			2	2		
			Question 1 total	**4**	**3**	**2**	**9**	**4**	**0**

#3

Question				Marking details	Marks available AO1	AO2	AO3	Total	Maths	Prac
	(a)	(i)		T tension in the string **and** mg weight of mass (gravitational force or gravity)	1			1		
		(ii)		T does not have a component tangential to the arc (1) Component of mg tangential to the arc is $mg\sin\theta$, (1) this is in the opposite direction to s (or θ) **and** so the negative sign (1)		3		3	1	
		(iii)		acceleration $= \frac{-mg\sin\theta}{m} = -g\sin\theta$ $= -g\theta$ (1)(using the approximation) $\theta = \frac{s}{l}$ or $\sin\theta = \frac{s}{l}(1) = -\frac{gs}{l}$		2		2	2	
		(iv)		Acceleration $\propto$ θ (or s) measured [from a fixed position] (1) and opposite in direction (-ve) so SHM (1)			2	2		
	(b)	(i)	I	Substitution: $T = 2\pi\sqrt{\frac{l}{g}} = 2\pi\sqrt{\frac{1.2}{9.81}}$ (1) $= 2.20$ [s] (1)	1	1		2	2	
			II	$f = \frac{1}{T} = 0.45[5]$ [H]z **ecf** (1)		1		1	1	
		(ii)		For maximum distance along the arc $\theta_{max} = 0.067$, also $\sin\theta_{max} = 0.067$ As $\theta_{max} = \sin\theta_{max}$ (i.e. for the largest value of θ) (1) then $\sin\theta$ is equal to θ for all θ, and approximation holds for SHM. System oscillates with SHM (1)			2	2	1	
				Question total	**2**	**7**	**4**	**13**	**7**	**0**

#4

Question			Marking details	Marks available AO1	AO2	AO3	Total	Maths	Prac
2	*(a)*		Angle when arc [length] equals radius Accept about 57.3° **or** angle when 2π = 360° or cycle / circle	1			1		
	(b)	(i)	Use of $T = \frac{1}{f}$ (1) Answer = 1.67 [s] (1) Accept $\frac{5}{3}$ **or** 1.66 **or** $1.\dot{6}$ **or** 1.7 [s] Don't accept 1.6 [s]	1	1		2	1	
		(ii)	Substitution into $\omega = \frac{2\pi}{T}$ or $2\pi f$ or **and** $v = \omega r$ (1) **ecf** on T or f v = 10.6 [m s⁻¹] (1) (Accept 10.5 m s⁻¹ if 1.67 s used)		2		2	2	
	(c)		$N = \frac{mv^2}{r}$ or $mr\omega^2$ or implied (1) $N = \frac{66.2\times(10.6)^2}{2.8}$ = [2 634] [N] (1) **ecf** on v and ω accept approximately 2 657 [N] F = 66.2 × 9.81 = [649.4 [N]] (1) Vertical forces are balanced or equivalent e.g. $F = W$ (1)	1 1	1 1		4	2	
	(d)	(i)	650 ≤ **or** = **or** < μ × 2 600 (1) So μ > **or** = 0.24 or 0.25 (1) **Alternative:** 2 600 × 0.25 (1) = 650 (1)	1	1		2	2	
		(ii)	Friction = 650 [N] or implied (1) $\frac{650}{0.45}$ = 1 444 [N] (1) Equating to centripetal (1) ω = 2.8 [rad s⁻¹] (1) Answer of 2.51 [rad s⁻¹] award 1 mark only		1	1 1 1	4	2	
			Question 2 total	**5**	**7**	**3**	**15**	**9**	**0**

#5

(a)	(i)	$\omega = \frac{45(2\pi)}{60} = 4.71$ [rad s^{-1}] Conversion from rotations to radians, with the '45'. (1) Conversion from minutes to seconds and convincing working. (1)	2
	(ii)	$velocity = \omega r = (4.71)(0.08) = 0.38$ [m s^{-1}] Formula and substitution. (1) Result. (1)	2
	(iii)	$acceleration = \omega^2 r = (4.71)^2(0.08) = 1.77$ [m s^{-2}] Formula and substitution. (1) Result (1)	2
	(iv)	Towards point Q, or towards centre of circle.	1
(b)	(i)	$A = 0.080$ [m]	1
	(ii)	$T = \frac{2\pi}{\omega} = \frac{2\pi}{4.71} = 1.33$ [s]	1
	(iii)	$a = -1.77\sin(4.71 \times 0.20) = -1.43$ [m s^{-2}] Substitution of time (1). Result with minus sign (1)	2
	(iv)	A body moves with SHM if its acceleration - is directly proportional to its displacement from a fixed point - is always directed towards that [fixed] point 1 for: each statement	2
	(v)	$a = -\omega^2 A\sin(\omega t)$; $x = A\sin\omega t$ so substitution gives: $a = -\omega^2 x$ convincing manipulation. (1) final expression linking to SHM.(1)	2
(c)		$x = 0.06\sin\left(4.71t - \frac{\pi}{2}\right)$. 1 for: each correct parameter inserted.	3

#6

Question			Marking details	Marks available AO1	AO2	AO3	Total	Maths	Prac
	(a)		Distance moved by mass P in 1 period, T (i.e. in one rotation) = $2\pi R$ **and** speed = distance / time = $\frac{2\pi R}{T}$ **Alternative:** $\omega = \frac{2\pi}{T}$ and $v = \omega R$		1		1	1	1
	(b)		R /m | Time of 10 rot /s | T /s | v / m s^{-1} | v^2 / m^2 s^{-2} 0.50 | 4.7 | 0.47 | 6.68 | 44.6 0.60 | 5.2 | 0.52 | 7.25 | 52.6 0.70 | 5.6 | 0.56 | 7.85 | 61.6 0.80 | 6.0 | 0.60 | 8.38 | 70.2 0.90 | 6.3 | 0.63 | 8.98 | 80.6 T column: All values correct (1) For column v all values correct (1) For column v^2 all values correct **ecf** (1) Consistent use of sig figs in each column and 2 or 3 sig figs (1)		4		4	4	4
	(c)	(i)	Centripetal force = $0.010\frac{v^2}{R}$ (1 for $\frac{mv^2}{R}$; 1 if value inserted for m)	1	1		2	1	2
		(ii)	Forces acting on mass Q: $0.090\,g - \tau = 0$ τ: tension (1) So $\tau = 0.090g$. Substitution for τ into (c)(i) (1) $0.090g = 0.010\frac{v^2}{R}$ $v^2 = \frac{0.090g}{0.010}R$ $v^2 = 9g\ R$ clear and convincing working (1)		3		3	2	3
	(d)	(i)	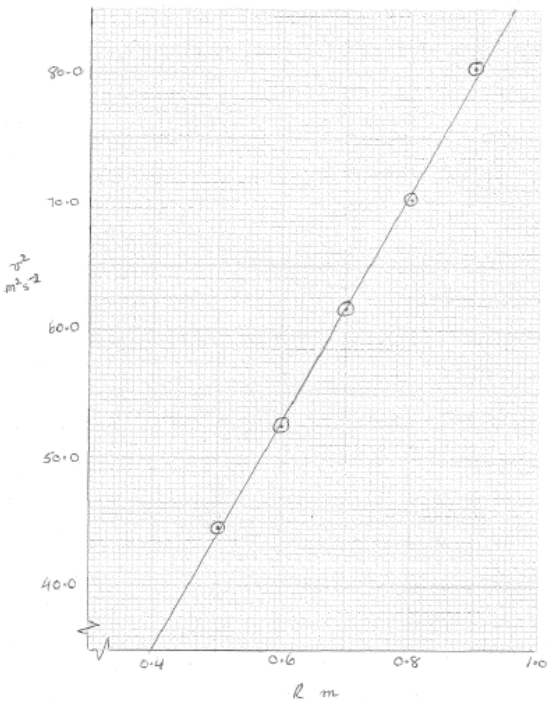 Axes, suitable choice scales (no multiples of 3) and labels on both axes (1) – scales to occupy more than half of paper All points plotted correctly to ±½ small square division (2) 4 points plotted correctly to ±½ small square division award 1 mark 1-3 points plotted correctly to ±½ small square division award 0 marks Line of best fit (1)		4		4	4	4
		(ii)	gradient = $\frac{50.0}{0.56}$ = 89.286 m s^{-2} ; find gradient from best fit line (1) also gradient = $9g$ general method (1) $9g = 89.286$ $g = \frac{1}{9}\,89.286 = 9.92$ m s^{-2} unit mark (1)						

STEMUP.CO.UK

			$g = \frac{4}{9}\ 89.286 = 9.92$ m s^{-2} **unit mark** (1) (Accept g = 8.8 to 10.8 m s^{-2} i.e. uncertainty of ~10%.) Use of single data point award a maximum of 2 marks			3	3	3	3
		(iii)	Take measurements for each value of R several times **or** measure time of more rotations **or** use of video capture or increase radius and period Accept repeat readings Don't accept have an assistant			1	1		1
			Question total	**1**	**13**	**4**	**18**	**15**	**18**

#7

(a)		[centripetal force =] $m\omega^2 r$ [or $\omega^2 r$ and ma] (1) $F = 32.5 \times 1.4^2\ r$ [= 63.7 r] (1) Friction [of the surface on the shoes] provides centripetal force [or is the resultant etc.] (1) [Accept $F = m\omega r^2$ for 1st and 3rd marks as F is defined in the question]	3
(b)		63.7 r = 114 [N] (1) r = 1.79 **and** relevant comment, e.g. if r greater, F > 114 N (1) [Alt: Subst r = 1.8 m and comment that F > 114 N]	2
(c)		$T = \frac{2\pi}{\omega}$ [or by impl.] (1) = [$\frac{2\pi}{1.4}$ =] 4.49 s (1)	2
(d)		$v = \omega A$ [or by impl.] (1) = [1.4 × 1.8 =] 2.52 m s^{-1} (1) [If $v = A\omega \cos \omega t$, or equiv, then cos ωt = 1must be stated for 1st mark]	2
(e)		$a = \omega^2 A$ [or by impl.] (1) = [$1.4^2 \times 1.8$ =] 3.53 m s^{-2} (1) occurs at the extremities / when $x = \pm A$ etc. (1) [If $a = A\omega^2 \cos \omega t$, or equiv, then cos ωt = 1must be stated for 1st mark]	3
(f)		At least one cycle of wave drawn with correct amplitude [1.8 m e.c.f.] (1) Reasonable shape of sinusoid + correct period + correct phase [i.e. sin wave] (1)	2
(g)		Use of – 1.00 = sin ωt (1) $1.4t = \sin^{-1}\left(\frac{-1}{1.8}\right)$ (1) [= – 0.59] t = – 0.42 s (1) [Mysterious loss of – sign loses 1 mark] $t_1 = \frac{T}{2} + 0.42$ [2.42 s] **and** $t_2 = T - 0.42$ [4.07 s] (1) Max 2 marks for reading from graph ± 0.1 s, i.e 2.6, 2.7 s ✓ 4.0, 4.1 s ✓	4
			[18]

#8

Question			Marking details	Marks available AO1	AO2	AO3	Total	Maths	Prac
	(a)	(i)	Use of the equation $\frac{M_2 d}{(M_1 + M_2)} = x$ even if wrong M_2 (1) $\frac{9.2 \times 10^{24} \times 5.3 \times 10^{10}}{(9.5 \times 10^{29} + \{9.2 \times 10^{24}\})}$ seen (1) ({ $+9.2 \times 10^{24}$ } can be omitted from the above equation) **or** 513 263 [m] seen etc.	1 1			2	2	
		(ii)	$v = \frac{2\pi r}{T}$ applied or $v = \omega r$ and $\omega = \frac{2\pi}{T}$ combined (1) Conversion of 130 days ($130 \times 24 \times 3\,600$) (1) Answer = 0.287 [m s^{-1}] (**ecf** on day conversion) (1)	1	1 1		3	3	
		(iii)	Redshift is small **or** the redshift is proportional to velocity **or** small $\Delta\lambda$ **or** shown using the Doppler equation (1) Small wavelength change is difficult to measure **or** shifted wavelength is too close to the original (1)		2		2		
	(b)	(i)	$F = \frac{GMm}{r^2}$ used (1) Answer = 2.08×10^{23} [N] (1)	1	1		2	2	
		(ii)	Method for obtaining stress i.e. $\frac{F}{A}$ (1) 1.35×10^9 [Pa] (1) Correct conclusion e.g. the steel bar would break **ecf** (1) Theory doesn't work / Newton's grav law used successfully for centuries / won't work for elliptical orbits / would melt (1) **Alternative:** Use of $F = \sigma A$ (1) $F = 6.9 \times 10^{22}$ [N] (1)			4	4	2	
	(c)	(i)	$\text{PE} = -\frac{GMm}{r}$ used N.B. **ecf** if PE = Fr used (1) Answer = [-]1.10×10^{34} [J] (1)	1	1		2	2	
		(ii)	Realising KE is involved (1) Correct variation with distance for KE or velocity **or** as PE increases KE decreases or converse (1)			2	2		
			Question total	**5**	**6**	**6**	**17**	**11**	**0**