GCE A LEVEL MARKING SCHEME

SUMMER 2025

A LEVEL
BIOLOGY - UNIT 3
1400U30-1

© WJEC CBAC Ltd.

About this marking scheme

The purpose of this marking scheme is to provide teachers, learners, and other interested parties, with an understanding of the assessment criteria used to assess this specific assessment.

This marking scheme reflects the criteria by which this assessment was marked in a live series and was finalised following detailed discussion at an examiners' conference. A team of qualified examiners were trained specifically in the application of this marking scheme. The aim of the conference was to ensure that the marking scheme was interpreted and applied in the same way by all examiners. It may not be possible, or appropriate, to capture every variation that a candidate may present in their responses within this marking scheme. However, during the training conference, examiners were guided in using their professional judgement to credit alternative valid responses as instructed by the document, and through reviewing exemplar responses.

Without the benefit of participation in the examiners' conference, teachers, learners and other users, may have different views on certain matters of detail or interpretation. Therefore, it is strongly recommended that this marking scheme is used alongside other guidance, such as published exemplar materials or Guidance for Teaching. This marking scheme is final and will not be changed, unless in the event that a clear error is identified, as it reflects the criteria used to assess candidate responses during the live series.

© WJEC CBAC Ltd

WJEC GCE A LEVEL BIOLOGY

UNIT 3 – ENERGY HOMEOSTASIS AND THE ENVIRONMENT

SUMMER 2025 MARK SCHEME

GENERAL INSTRUCTIONS

Recording of marks
Examiners must mark in red ink.
One tick must equate to one mark (apart from the questions where a level of response mark scheme is applied).
Question totals should be written in the box at the end of the question.
Question totals should be entered onto the grid on the front cover and these should be added to give the script total for each candidate.

Marking rules
All work should be seen to have been marked.
Marking schemes will indicate when explicit working is deemed to be a necessary part of a correct answer.
Crossed out responses not replaced should be marked.
Credit will be given for correct and relevant alternative responses which are not recorded in the mark scheme.

Extended response question
A level of response mark scheme is used. Before applying the mark scheme please read through the whole answer from start to finish. Firstly, decide which level descriptor matches best with the candidate's response: remember that you should be considering the overall quality of the response. Then decide which mark to award within the level. Award the higher mark in the level if there is a good match with both the content statements and the communication statement. Award the middle mark in the level if most of the content statements are given and the communication statement is partially met. Award the lower mark if only the content statements are matched.

Marking abbreviations
The following may be used in marking schemes or in the marking of scripts to indicate reasons for the marks awarded.

cao = correct answer only
ecf = error carried forward
bod = benefit of doubt

© WJEC CBAC Ltd.

Question				Marking details	Marks Available					
					AO1	AO2	AO3	Total	Maths	Prac
1	(a)			Mitochondrion / mitochondria Krebs / TCA Electron Transport Chain / ETC ATP {synthetase / synthase} **4 correct = 2 marks** **3 correct = 1 mark** **0/1/2 correct = 0 marks**	2			2		
	(b)			Reduced NAD – 3 Reduced FAD – 1 ATP -1 **All correct for 1 mark (1)**	1			1		
	(c)	(i)	I	{Protons / hydrogen ions} {pumped / moved against concentration gradient / moved by active transport / owtte} (1) (From matrix) to intermembrane space (1)		2		2		
			II	{Protons / hydrogen ions} {diffusing / flow / move} (from intermembrane space) to {matrix / down a gradient} (1) (Curved arrow shows) formation of ATP / oxidative phosphorylation / ADP + Pi --> ATP (1)		2		2		
		(ii)		acts as final electron acceptor (1)	1			1		
				Question 1 total	**4**	**4**	**0**	**8**	**0**	**0**

© WJEC CBAC Ltd.

Question				Marking details	Marks Available					
					AO1	AO2	AO3	Total	Maths	Prac
2	(a)	(i)		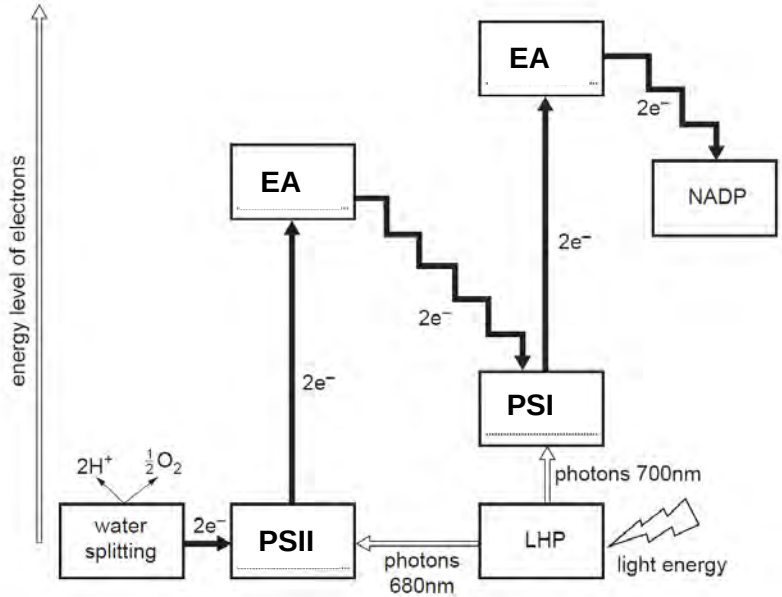 **Both EA correct =1 mark** **Both PSII and PSI correct = 1 mark**		2		2		
		(ii)		Placed between EA and PSI (1) ADP + Pi to ATP (1)	2			2		
		(iii)		Photolysis (1)	1			1		

© WJEC CBAC Ltd.

Question				Marking details	Marks Available					
					AO1	AO2	AO3	Total	Maths	Prac
		(iv)	I	{Accepted by / reduce / combine with} NADP / forms NADPH / maintains {proton / electrochemical / concentration} gradient / {diffuse / flow / move} through ATP synthetase (to produce ATP) (1)	1			1		
			II	it {diffuses / moves} out of {chloroplast / cell / leaf / stomata / plant} / used in <u>aerobic</u> respiration (1)	1			1		
		(v)		Used to raise electrons to higher energy level / Excite electrons / owtte (1)	1			1		
	(b)			**Any four (x1) from.** A. {less / no} {enzyme / dehydrogenase} produced (1) B. {less / no} {reduced NADP / $NADPH_{(2)}$} for {light independent reactions / Calvin Cycle} / owtte (1) C. {less / no} reduction of GP / GP not converted to TP (1) D. {less / no} TP to regenerate RUBP (1) E. {less / no} {glucose / products of photosynthesis} (1)			4	4		
				Question 2 total	**6**	**2**	**4**	**12**	**0**	**0**

© WJEC CBAC Ltd.

Question				Marking details	Marks Available					
					AO1	AO2	AO3	Total	Maths	Prac
3	(a)	(i)		Transverse			1	1		
		(ii)		Renal artery + renal vein	1			1		
		(iii)		Z		1		1		
	(b)			(Albumin is too large to) pass through {(filtration) slits / podocyte (foot processes)} / filtration slits are too small for {it / albumin} to pass through (1) (Glucose–small enough to) pass {all three components / the (filtration) slits} (1)			2	2		
	(c)	(i)		1.1932×10^6 to 1.193805208×10^6 (3) **If incorrect award 2 marks for** Calculated as 1,193,200 to 1,193,805.208 not standard form Correct answer in standard form but incorrectly rounded **If incorrect award 1 mark for** Formula seen 2x{3.14 / Pi }x0.002x95x1000000		3		3	3	
		(ii)		**Any one (x1) from** Tubes have uniform {diameter / radius / area / volume / length} (1) Tubes are straight (1) Accept reverse argument for kidney tubules			1	1		
		(iii)		(The larger the surface area) the greater the rate of filtration/ filtration is quicker / owtte.		1		1		

© WJEC CBAC Ltd.

Question				Marking details	Marks Available					
					AO1	AO2	AO3	Total	Maths	Prac
	(d)	(i)		Filtration rate will be {lower / less} **and** longer diffusion distance / OWTTE (1)		1		1		
		(ii)		{Gene / allele} on the X chromosome (1) Males only need one copy of the (recessive) allele to have Alport syndrome / females need to have 2 copies of the (recessive) allele to have Alport syndrome / females may have a dominant allele on the other chromosome (1)		2		2		
				Question 3 total	**1**	**8**	**4**	**13**	**3**	**0**

© WJEC CBAC Ltd.

Question				Marking details	Marks Available					
					AO1	AO2	AO3	Total	Maths	Prac
4	(a)			A line along an {environmental gradient / change in {environment / habitat} / owtte} (1) (environment / owtte / abiotic factor) changes down {the shore / owtte} (1)	2			2		
	(b)			*F.spiralis* – upper shore (some mid) *F. vesiculosus* – mid shore (some lower) *F. serratus* – lower shore (some mid) **all correct for 1 mark**		1		1		
	(c)	(i)	I	The {greatest length / height of shore / more of shore accessible} available for {transect / sampling / owtte} (1) Accept greatest time (qualified)			1	1		1
			II	(It would / might still be) dark would not be able to {identify seaweed / see} (1) Accept rocks still wet so risk of slipping			1	1		1
		(ii)		15 - 16 (2) If incorrect award one mark for Line on graph at 8m height (1)		2		2	2	2
	(d)			less surface exposed / increased humidity inside curled thallus / reduces water potential gradient / humidity gradient / owtte(1) reduces {water loss / evaporation / transpiration} (1)			2	2		
	(e)	(i)		200 (2). Accept 196.96969 - 203.030303 If incorrect award 1 mark for 66 x 1000/330 Accept measurements in range of 65-67 mm		2		2	2	

© WJEC CBAC Ltd.

Question				Marking details	Marks Available					
					AO1	AO2	AO3	Total	Maths	Prac
		(ii)		60% (2) 198/330 X100 (1)		2		2	2	
	(f)	(i)		(Student's) t test	1			1		
		(ii)		No <u>significant</u> difference in the <u>mean</u> percentage of thallus made up of core between {species / upper and lower shores}		1		1		
		(iii)		**Any two (x1) from** Use {a suitable number of / more} quadrats in each position on the shore (1) Sample more (than 15) thalli (from each quadrat) / larger sample size (1) Make / measure several sections of each thallus and calculate means (1)			2	2		
				Question 4 total	**3**	**8**	**6**	**17**	**6**	**4**

© WJEC CBAC Ltd.

Question				Marking details	Marks Available					
					AO1	AO2	AO3	Total	Maths	Prac
5	(a)	(i)		Effector -quadriceps (muscle), CNS-spinal cord (1) FOR BOTH		1		1		
		(ii)		A- sensory (neurone) B- motor (neurone) (1) FOR BOTH	1			1		
		(iii)		only {2 / fewer} neurones / {1 / fewer) synapses} (in the pathway) / no relay neurone (1) no connection to brain / owtte / only connects with spinal cord (1)		2		2		
	(b)	(i)		Depolarisation (1)	1			1		
		(ii)		(Move towards) +40 (mv) / to the right / more positive (1)		1		1		1
		(iii)		K^+ channel closes to {prevent exit of K^+ ions/ keep K^+ ions in} (1) Na^+ channel opens to allow Na^+ ions to {move in rapidly / flood in / influx} into the {axon / neurone} (1)	2			2		
		(iv)		Na^+ ions pumped out **and** K^+ ions pumped in (1) 3 Na^+ (ions pumped out) **and** 2 K^+ (ions pumped in) (1)	2			2		
	(c)			**Any four (x1) from** A. (With Ca^{2+} ion channels blocked) {less / no} Ca^{2+} ions enter the {synaptic {knob/bulb} / axon terminal} (1) B. {less / no} {Ach / neurotransmitter / synaptic} vesicles {move to / fuse with} presynaptic membrane (1) C. {less / no} ACh {released into / diffuses across} synaptic cleft / {less / no} exocytosis (1) D. Not enough ACh binds to receptors on post synaptic membrane / Not enough Na^+ channels open on post synaptic membrane (1) E. Depolarisation of post synaptic membrane does not occur / less Na^+ diffuses in / owtte (1) F. threshold potential is not reached / no action potential generated / muscle does not contract (1)		4		4		
				Question 5 total	**6**	**8**	**0**	**14**	**0**	**1**

© WJEC CBAC Ltd.

Question				Marking details	Marks Available					
					AO1	AO2	AO3	Total	Maths	Prac
6	(a)	(i)		To provide {nutrients / named nutrients / {C / N} source} for the bacteria (1)	1			1		1
		(ii)	I	Add 20µl (64 µg/ml) antibiotic to 20µl of culture medium / add equal volumes of antibiotic and culture medium (1) In order to halve the concentration/ 64 divided by 2 = 32 (1)		2		2		2
			II	Serial dilution	1			1		1
		(iii)	I	To ensure the {concentration / volumes} were the same as the other wells. (1)			1	1		1
			II	Allow comparison in the absence of antibiotics / to show that the culture medium did not cause the decrease in (bacterial) growth / to show that the antibiotic did cause the decrease in (bacterial) growth / owtte (1)			1	1		1
		(iv)	I	1, 4, 2 = **1 mark**			1	1		1
			II	2.33 or 2.3 or 2 = **1 mark** Ecf from I		1		1		1
		(v)		**Any one (x1) from:** End point {not clear / subjective} / difficult to say if growth has been inhibited (1) Precision is limited to chosen concentrations / gap between concentrations is too large / owtte (1) Might be different numbers of bacterial cells added (1)			1	1		1

© WJEC CBAC Ltd.

Question				Marking details	Marks Available					
					AO1	AO2	AO3	Total	Maths	Prac
	(b)	(i)		Antibiotic C **and** It has the {lowest MIC / most effective} for both bacteria / it does not require a concentration above 60 to inhibit both bacteria / lowest concentration required to inhibit both bacteria / owtte (1)			1	1		1
		(ii)	I	{*E. coli* / Gram negative} has {thin {peptidoglycan / murein} / (outer) {lipopolysaccharide / lipoprotein}} **and** {*S.aureus* / Gram positive} has {thick {peptidoglycan / murein} / no (outer) {lipopolysaccharide / lipoprotein}} (1)	1			1		
			II	Thick peptidoglycan might hinder entry of {compounds / antibiotics} / lipopolysaccharides might help entry / ORA (1)		1		1		
	(c)	(i)		Thymine / cytosine	1			1		
		(ii)		similar {shape / structure} to {trimethoprim / TMP / the antibiotic} / both have benzyl groups (1) Compound X { fits / is complementary to} the <u>active site</u> of {dihydrofolate reductase / the enzyme} (1)		2		2		
		(iii)		Loss of this plant (species) would lead to loss of {useful genes / genes for (new) antibiotics / genes for new medicines} / It ensures the conservation of existing gene pools (1) Increased resistance of bacteria to existing antibiotics / could be used to make (new) antibiotics (1)		2		2		
				Question 6 total	**4**	**8**	**5**	**17**	**0**	**10**

© WJEC CBAC Ltd.

Question	Marking details	Marks Available					
		AO1	AO2	AO3	Total	Maths	Prac
7	**Indicative content** **Measures** A1 Increase mesh sizes of nets / bigger holes in nets / owtte A2 Not allowing fishing in breeding season/ restrict fishing seasons / owtte A3 limit size of {catch/boat/ net} / set quotas A4 have protected areas where no fishing / exclusion zone / incentivise fish farming A5 limit number of boats / Control size of fleet / days at sea **Population / scientific basis** B1 {Criterion 1 / level of exploitation / biomass of fish caught / fish deaths / FD} is a measure of {{death rate / decrease in the fish population / fish removed from population} B2 {Criterion 2 / reproductive capacity/biomass of reproducing fish / reproductive biomass/RB} is a measure of {birth rate / increase} in the fish population / fish added to the population} B3 if {death (rate) / FD*} is greater than {birth (rate) / RB*} population will decrease / ORA B4 in a stable population, birth (rate) = death (rate) / fish stocks are sustainable if {death (rate) / FD} is equal to {birth (rate) / RB} *Accept descriptions of FD and RB	3	3	3	9		

© WJEC CBAC Ltd.

Question	Marking details	Marks Available					
		AO1	AO2	AO3	Total	Maths	Prac
	Effectiveness of CFP in Greater North Sea C1 {½ / 50%} of fish populations did not meet either criterion **so** population would decrease C2 25 % met only one criterion **so** population would decrease C3 populations will be declining in {¾ / 75%} C4 {¼ / 25%} of fish populations met both criteria so population **is sustained** C5 Not all populations identified / not all monitored C6 a general conclusion linked to data e.g. the policy is not effective as 24 /48 did not meet either target						

© WJEC CBAC Ltd.

Question	Marking details	Marks Available					
		AO1	AO2	AO3	Total	Maths	Prac
	7-9 marks Indicative content of this level is. Detailed information from all three lists *The candidate constructs an articulate, integrated account, correctly linking relevant points, such as those in the indicative content, which shows sequential reasoning. The answer fully addresses the question with no irrelevant inclusions or significant omissions. The candidate uses scientific conventions and vocabulary appropriately and accurately.* **4-6 marks** Indicative content of this level is detailed information from 2 of the lists. *The candidate constructs an account correctly linking some relevant points, such as those in the indicative content, showing some reasoning. The answer addresses the question with some omissions. The candidate usually uses scientific conventions and vocabulary appropriately and accurately.* **1-3 marks** Indicative content of this level is some information from at least one of the lists or little information from more than one list. *The candidate makes some relevant points, such as those in the indicative content, showing limited reasoning. The answer addresses the question with significant omissions. The candidate has limited use of scientific conventions and vocabulary.* **0 marks** *The candidate does not make any attempt or give a relevant answer worthy of credit.*						
	Question 7 total	**3**	**3**	**3**	**9**	**0**	**0**

© WJEC CBAC Ltd.

UNIT 3: ENERGY HOMEOSTASIS AND ENVIRONMENT

SUMMARY OF MARKS ALLOCATED TO ASSESSMENT OBJECTIVES

QUESTION	AO1	AO2	AO3	TOTAL MARK	MATHS	PRAC
1	4	4	0	**8**	**0**	**0**
2	6	2	4	**12**	**0**	**0**
3	1	8	4	**13**	**3**	**0**
4	3	8	6	**17**	**6**	**4**
5	6	8	0	**14**	**0**	**1**
6	4	8	5	**17**	**0**	**10**
7	3	3	3	**9**	**0**	**0**
TOTAL	**27**	**41**	**22**	**90**	**9**	**15**

© WJEC CBAC Ltd.