OXFORD
INTERNATIONAL
AQA EXAMINATIONS

Please write clearly in block capitals.

Centre number | | | | | | Candidate number | | | | |

Surname _____

Forename(s) _____

Candidate signature _____
I declare this is my own work.

INTERNATIONAL AS
PHYSICS

Unit 2 Electricity, waves and particles

Tuesday 23 May 2023 | 07:00 GMT | Time allowed: 2 hours

Materials
For this paper you must have:
- a Data and Formulae Booklet as a loose insert
- a ruler with millimetre measurements
- a scientific calculator, which you are expected to use where appropriate
- a protractor.

Instructions
- Use black ink or black ball-point pen.
- Fill in the boxes at the top of this page.
- Answer **all** questions.
- You must answer the questions in the spaces provided. Do not write outside the box around each page or on blank pages.
- All working must be shown.
- If you need extra space for your answer(s), use the lined pages at the end of this book. Write the question number against your answer(s).
- Do all rough work in this book. Cross through any work you do not want to be marked.

Information
- The marks for questions are shown in brackets.
- The maximum mark for this paper is 80.

For Examiner's Use	
Question	Mark
1	
2	
3	
4	
5	
6	
7	
8	
9	
10	
11	
12–25	
TOTAL	

Do not write outside the box

Section A

Answer **all** questions in this section.

0 1 A gamma photon has a frequency of 3.3×10^{29} Hz.

Calculate, in TeV, the energy of this photon.

[2 marks]

energy of photon = _____ TeV

2

0 2 **Figure 1** shows an electrical circuit containing a cell, lamp, switch and voltmeter.

Figure 1

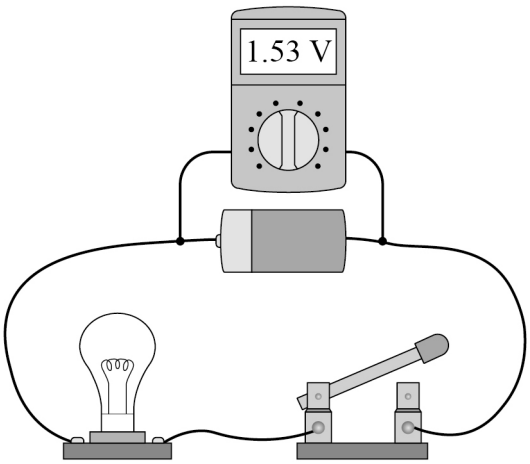

The switch is initially open and the voltmeter reading is 1.53 V.
When the switch is closed, the voltmeter reading changes.

Explain this change.

[3 marks]

_____

_____

_____

_____

_____

_____

3

Do not write outside the box

0 3 Photoelectrons are emitted when monochromatic light is incident on a metal surface. The emitted photoelectrons have a range of kinetic energies up to a maximum value.

Explain why this energy range occurs.

[3 marks]

3

Turn over for the next question

Do not write outside the box

0 4 A communications system sends information through an optical fibre as pulses of light. Pulse broadening limits the rate at which the information can be transmitted in the system.

0 4 . 1 Explain how material dispersion causes pulse broadening in the optical fibre.

[2 marks]

0 4 . 2 Explain why the maximum rate at which information can be transmitted depends on the length of the optical fibre.

[2 marks]

4

Do not write outside the box

0 5 . 1 Ultrasound waves are used for imaging in hospitals.

State **one** other medical application of ultrasound.

[1 mark]

_____

_____

0 5 . 2 One ultrasound imager emits waves of frequency 3.2 MHz.

Table 1 shows the speeds of the ultrasound waves as they pass through three types of tissue in a human body.

Table 1

Body tissue	Speed of wave / km s^{-1}
fat	1.4
muscle	1.6
bone	3.5

Determine the maximum wavelength of the ultrasound as it passes through the body.

[2 marks]

maximum wavelength = _____ m

3

Turn over ►

Do not write outside the box

0 6 The frequency f of the first harmonic of a vibrating string depends on the variables T, l and μ as shown by the equation:

$$f = \frac{1}{2l}\sqrt{\frac{T}{\mu}}$$

0 6 . 1 State the meaning of μ in this equation.

[1 mark]

0 6 . 2 **Figure 2** shows apparatus used to produce stationary waves on a stretched string.

Figure 2

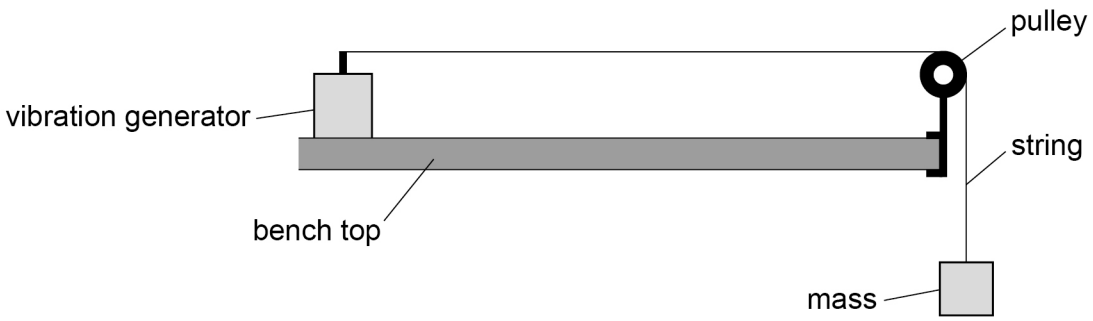

Describe how this apparatus can be used to collect the data needed to investigate the variation of f with l.

[4 marks]

Do not write outside the box

Figure 3 shows a stationary wave **W** on the full length of a vibrating string at a particular time t. The stationary wave **W** can be described as the superposition of two progressive waves **X** and **Y**.

X and **Y** have the same frequency and travel in opposite directions.
The dashed line on **Figure 3** shows the position of **X** at time t.

Figure 3

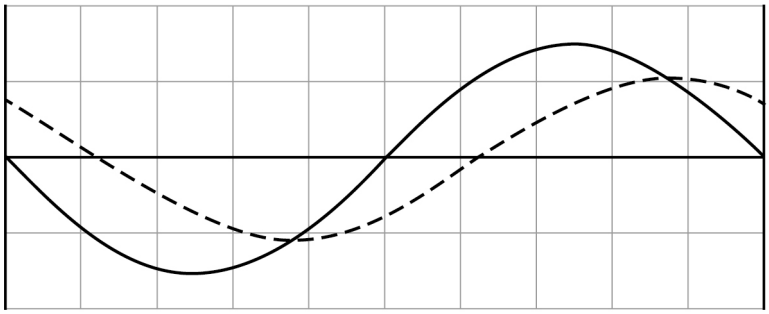

Key

——— stationary wave **W**

– – – – progressive wave **X**

0 6 . 3 State which harmonic of **W** is shown in **Figure 3**.

[1 mark]

0 6 . 4 Sketch on **Figure 3** the progressive wave **Y**.

[2 marks]

8

Turn over ►

Do not write outside the box

0 7 **Figure 4** shows a simplified arrangement of apparatus used to investigate the wave behaviour of electrons at a double slit.

Figure 4

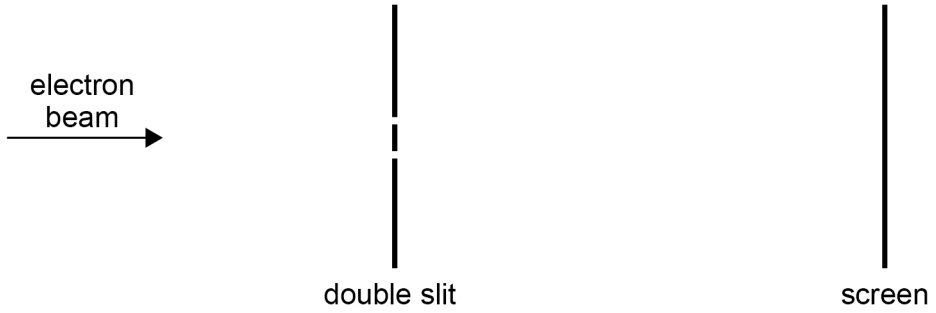

0 7 . 1 Electrons in the beam have been accelerated from rest across a potential difference V to reach a final speed v.

Show that:

$$v = \sqrt{\frac{2Ve}{m_e}}$$

[1 mark]

0 7 . 2 Show that when $V = 50.0\ \text{kV}$ the de Broglie wavelength of the electrons is approximately $5.5 \times 10^{-12}\ \text{m}$.

[2 marks]

Do not write outside the box

0 7 . 3 The electrons arrive at the double slit.
The spacing between the two slits is $2.0\ \mu m$.

Calculate the fringe spacing at a distance of $0.35\ m$ from the slits.

[2 marks]

fringe spacing = _____ m

A fringe pattern is observed when electrons arrive at the screen.
Figure 5 shows a magnified image of this pattern.

Figure 5

0 7 . 4 State **two** wave behaviours that explain how the electrons produce this fringe pattern.

[2 marks]

1 _____

_____

2 _____

_____

Question 7 continues on the next page

Do not write outside the box

0 7 . 5 The accelerating potential difference V is now increased, causing the fringe spacing to change.

Explain the change to the fringe spacing.

[2 marks]

0 7 . 6 Monochromatic light passes through a double slit. Coherent light from the two slits produces a fringe pattern similar to that in **Figure 5**.

Explain why this fringe pattern occurs.

[3 marks]

12

Do not write outside the box

0 8 **Figure 6** shows the variation of current I with potential difference V for a component as V increases.

Figure 6

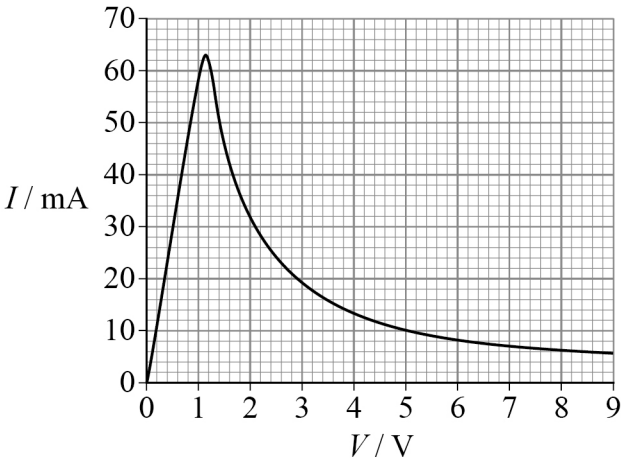

0 8 . 1 Discuss the extent to which this component obeys Ohm's law.

[2 marks]

Question 8 continues on the next page

Do not write outside the box

Figure 7 shows a thermistor **T** in a circuit. The circuit is used to monitor the temperature of water. The battery has an emf of 10.0 V and negligible internal resistance. The fixed resistor **R** has a resistance of 6.1 kΩ.

Figure 7

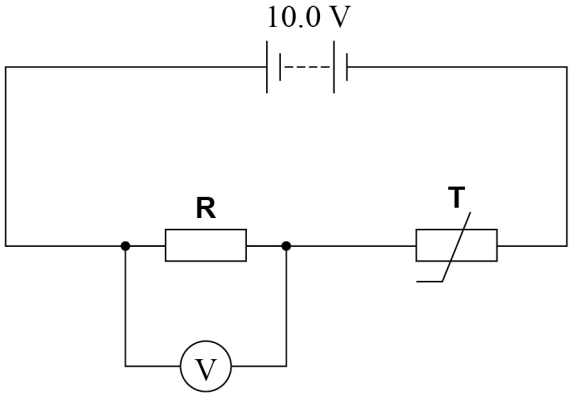

Figure 8 shows how the voltmeter reading varies with the temperature of **T**.

Figure 8

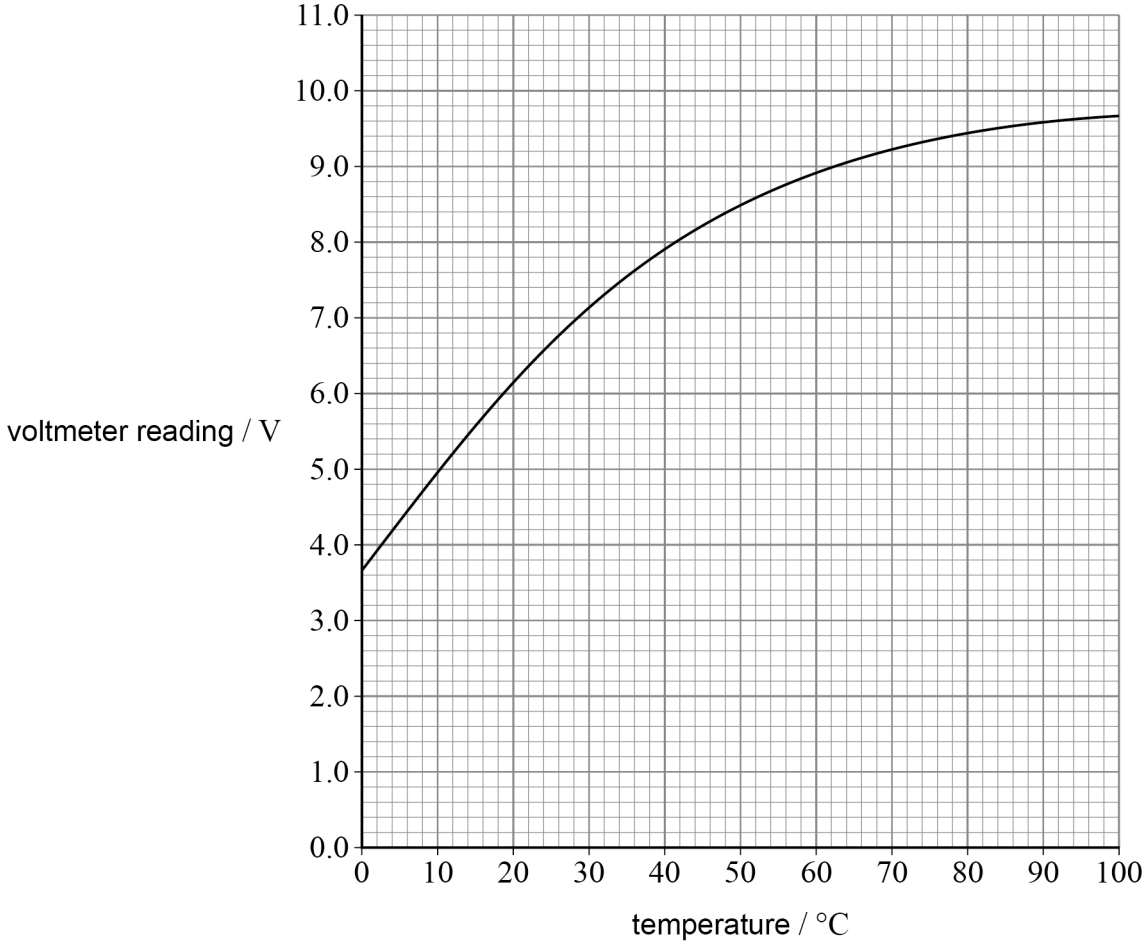

Do not write outside the box

0 8 . 2 Explain why the voltmeter reading changes as the temperature increases.

[2 marks]

0 8 . 3 Show that the resistance of **T** at 55 °C is approximately 900 Ω.

[2 marks]

Question 8 continues on the next page

Do not write outside the box

Figure 9 shows a modification to the circuit with a second fixed resistor **S** parallel to **T**.

Figure 9

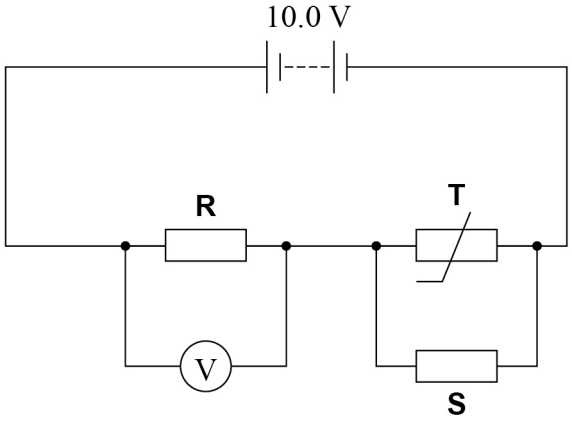

Figure 10 shows how the voltmeter reading now varies with the temperature of **T** for this modified circuit. **Figure 10** also shows the voltage variation with temperature for the original circuit in **Figure 7**.

Figure 10

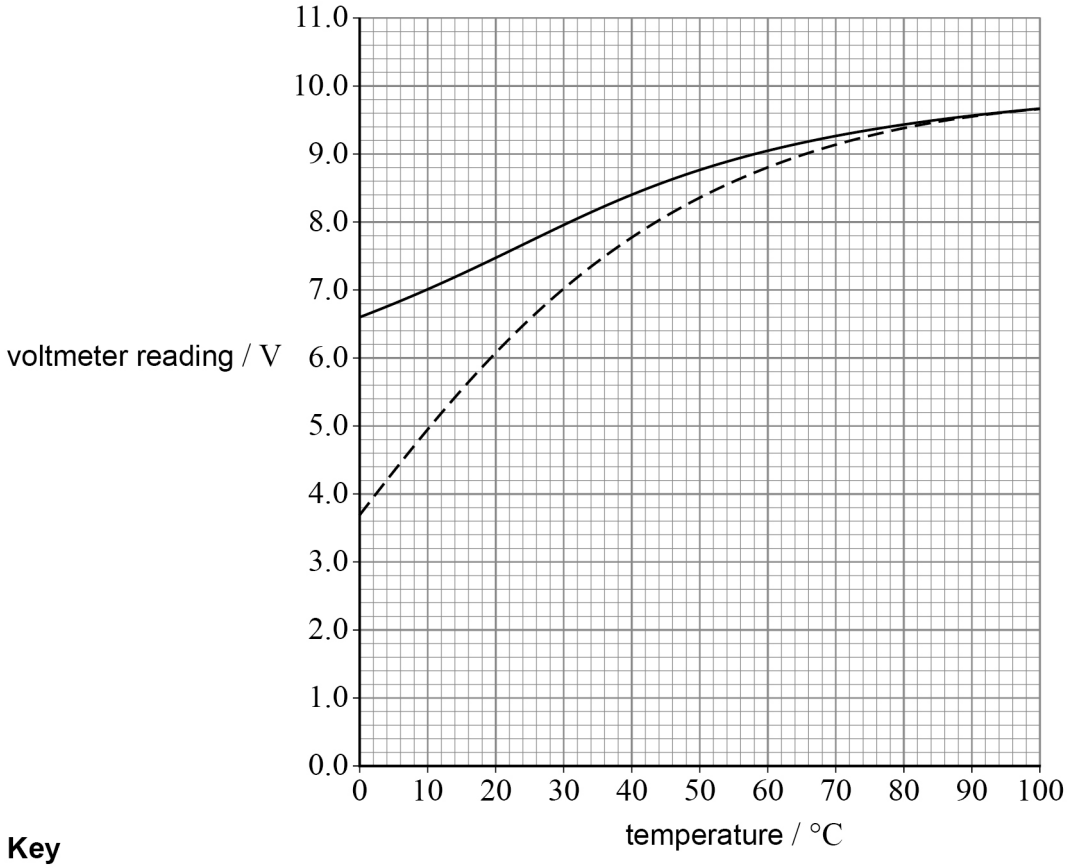

Key

——— modified circuit

– – – – – original circuit

Do not write outside the box

0 8 . 4 The current in **R** is 1.46 mA when the temperature of **T** is 55 °C.

Determine the resistance of **S**.

[3 marks]

resistance of **S** = _____ Ω

0 8 . 5 Suggest **one** disadvantage of using the modified circuit rather than the original circuit to monitor the temperature of the water between 0 °C and 100 °C.

[1 mark]

_____

_____

10

Turn over for the next question

Do not write outside the box

0 9 **Figure 11** shows an aerial fixed in a vertical position by cables. The aerial transmits radio waves.

Figure 11

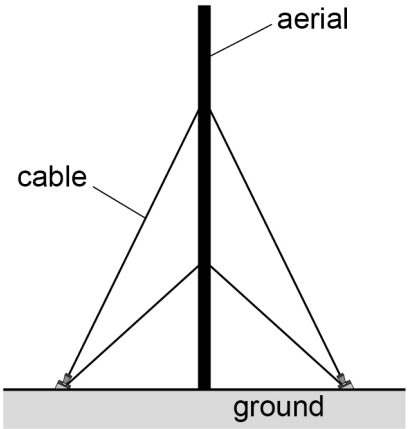

0 9 . 1 Explain why aerials that receive these radio waves should be vertical.

[2 marks]

Do not write outside the box

The cables vibrate in the wind. The vibrations can damage the cables.
To minimise this damage a damper is attached to each cable.

Figure 12 shows a damper attached to a cable. The ends of the damper are free to oscillate as shown.

Figure 12

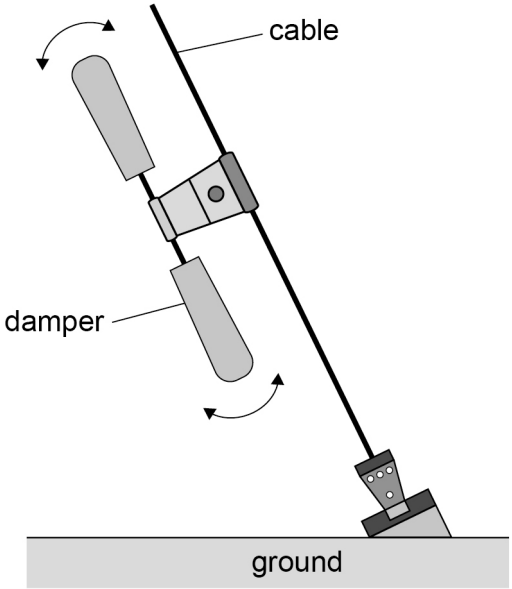

0 9 . 2 State what is meant by damping.

[1 mark]

Question 9 continues on the next page

Do not write outside the box

0 9 . 3 The damper is most effective when placed at a particular distance d from the clamp. **Figure 13** shows one damper at d.

Figure 13

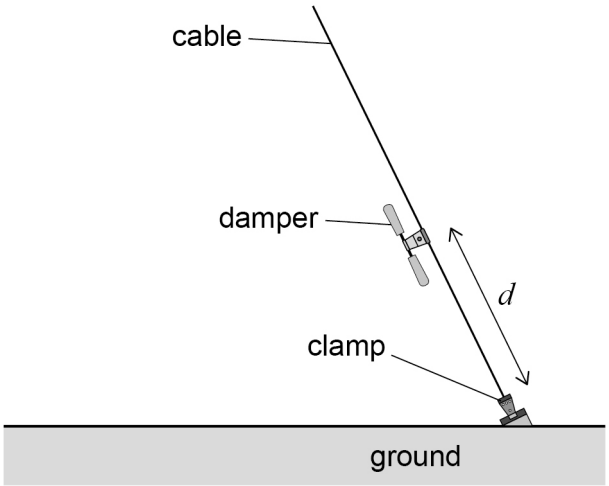

Engineers determine d by modelling the harmonics that can form on the cable.

Suggest why d is determined by using the harmonic with the maximum frequency that can form on the cable.

[2 marks]

5

END OF SECTION A

Do not write outside the box

Turn over for Section B

DO NOT WRITE ON THIS PAGE
ANSWER IN THE SPACES PROVIDED

Do not write outside the box

Section B

Answer **all** questions in this section.

1 0 A student uses a simple pendulum to determine a value for the acceleration g due to gravity. He attaches a small mass to a light string suspended between two wooden blocks, as shown in **Figure 14**.

Figure 14

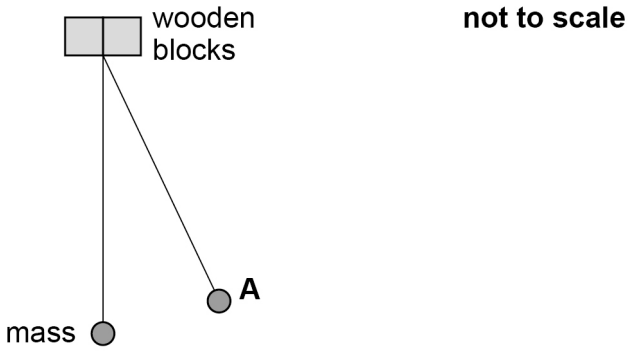

The student uses a metre ruler to measure the length L of the pendulum and records the value as $L = 400\ \text{mm} \pm 1\ \text{mm}$.

1 0 . 1 Explain why the student records the absolute uncertainty in L as $\pm 1\ \text{mm}$.

[1 mark]

He then moves the mass through a small angle to position **A**. He releases the mass and determines the time period T by noting the time T_{10} for 10 oscillations.

He records this as $T_{10} = 12.8\ \text{s} \pm 0.1\ \text{s}$.

1 0 . 2 Show that the percentage uncertainty in T is approximately 0.8%.

[1 mark]

Do not write outside the box

1 0 . 3 Determine the student's value for g.

[2 marks]

g = _____ m s^{-2}

1 0 . 4 Calculate the percentage uncertainty in g.

[2 marks]

percentage uncertainty = _____

1 0 . 5 Suggest **two** ways in which the student can increase the accuracy of his determination of g.

[2 marks]

1 _____

_____

2 _____

_____

8

Turn over ►

Do not write outside the box

1 1 **Figure 15** shows a fuel gauge that uses an optical fibre to measure the level of fuel in a container. Light passes along the optical fibre to a detector. The fibre has a series of V-grooves in one of its vertical sections.

Figure 15

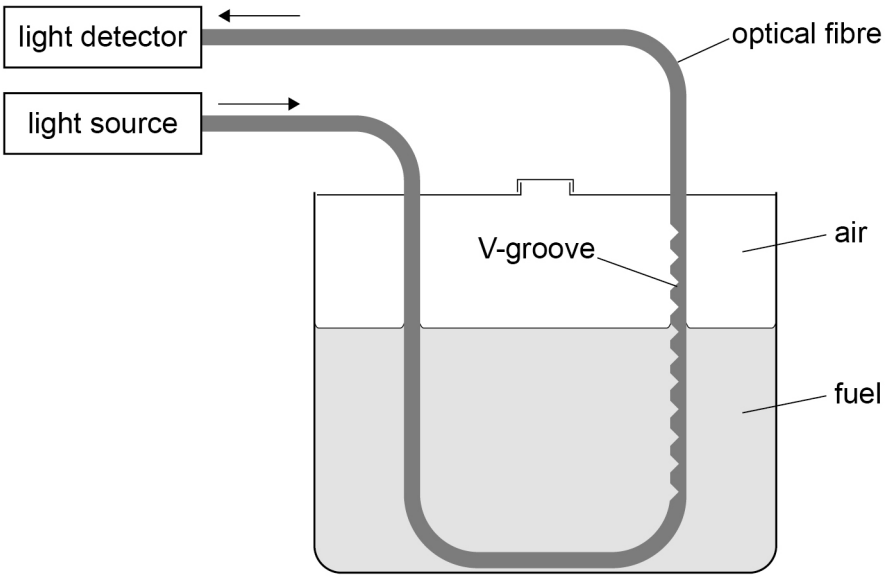

Figure 16 shows a magnified image of one of the grooves when the optical fibre is vertical and surrounded by air. Each groove has an angle of 90°.
Light travels vertically up the fibre and is incident on the lower section of the groove at **P**.

Figure 16

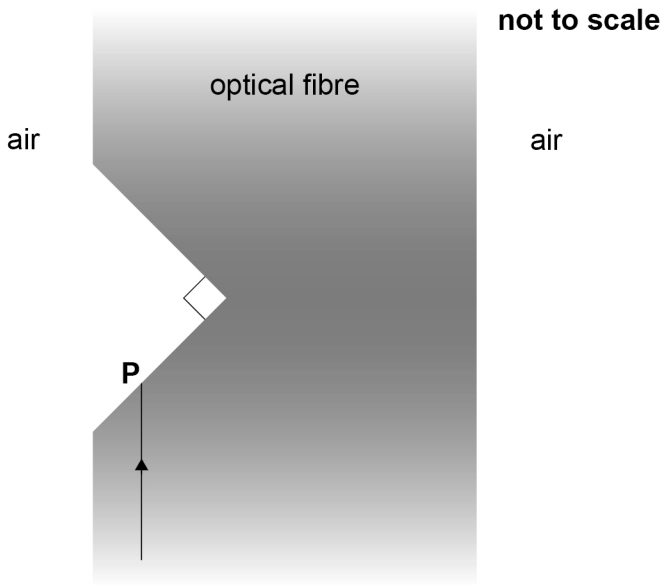

Do not write outside the box

1 1 . 1 The refractive index of the optical fibre is 1.49

Show that the critical angle for the optical fibre in air is approximately $42°$.

[1 mark]

1 1 . 2 Explain where the light ray shown in **Figure 16** leaves the optical fibre.

[2 marks]

_____

_____

_____

_____

Question 11 continues on the next page

Do not write outside the box

Figure 17 shows the groove when surrounded by fuel. The refractive index of the fuel is 1.39

Figure 17

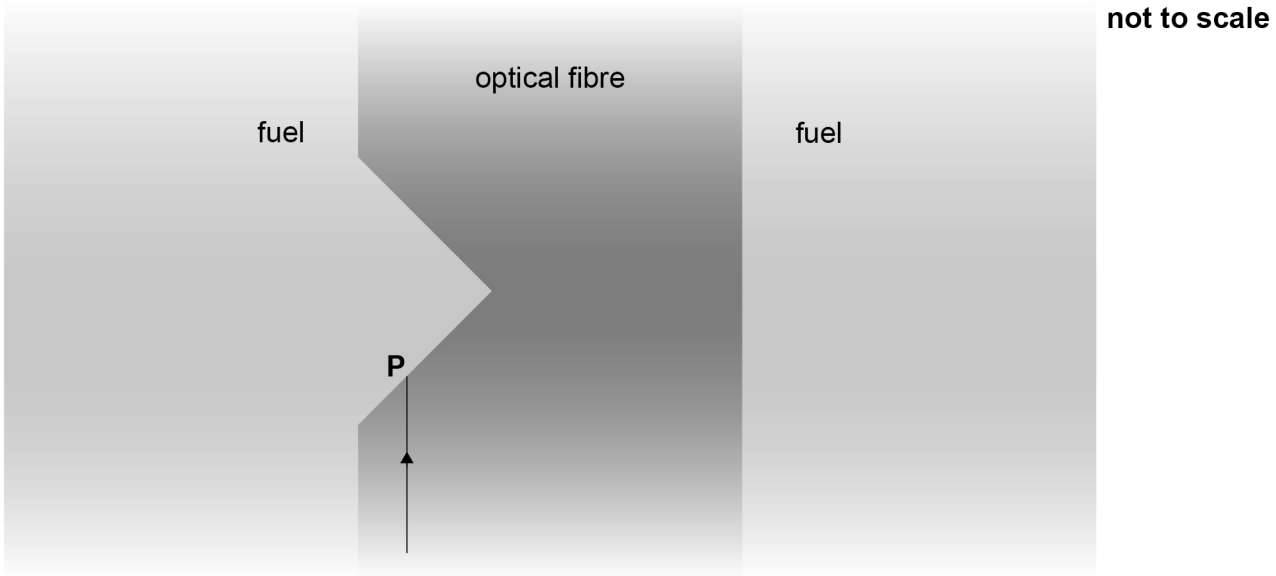

1 1 . 3 Show that the angle of refraction at **P** is approximately 50°.

[2 marks]

1 1 . 4 Draw on **Figure 17** the path of the ray through the fuel after the ray leaves **P**.

[1 mark]

1 1 . 5 Explain how the light intensity at the detector changes as the level of the fuel rises in the tank.

[2 marks]

_____

_____

_____

_____

_____

8

END OF SECTION B

Do not write outside the box

Section C

Each of the questions in this section is followed by four responses, **A**, **B**, **C** and **D**.

For each question select the best response.

Only **one** answer per question is allowed.
For each question, completely fill in the circle alongside the appropriate answer.

CORRECT METHOD ⬬ WRONG METHODS

If you want to change your answer you must cross out your original answer as shown.

If you wish to return to an answer previously crossed out, ring the answer you now wish to select as shown.

You may do your working in the blank space around each question but this will not be marked. Do **not** use additional pages for this working.

1 2 A cell has an emf of $4.00\ \mathrm{V}$ and an internal resistance of $3.00\ \Omega$.

An $18.0\ \Omega$ resistor is connected across the cell.

What is the terminal pd?

[1 mark]

A $0.57\ \mathrm{V}$

B $0.67\ \mathrm{V}$

C $3.33\ \mathrm{V}$

D $3.43\ \mathrm{V}$

Turn over ►

Do not write outside the box

1 3 The battery in a circuit has an emf of 12 V and negligible internal resistance.

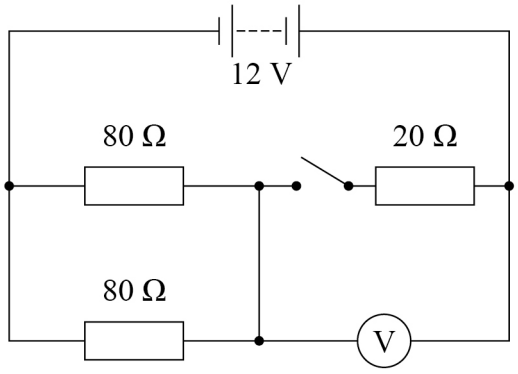

What is the voltmeter reading when the switch is open and when it is closed?

[1 mark]

	Switch open	Switch closed
A	0 V	6 V
B	0 V	4 V
C	12 V	6 V
D	12 V	4 V

Do not write outside the box

1 4 Three resistors and an ammeter are connected to a cell.
The cell has an emf E and negligible internal resistance.
Each resistor has a resistance R.

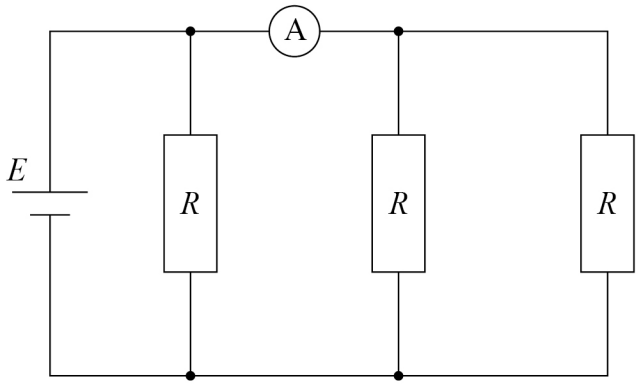

What is the reading on the ammeter?

[1 mark]

A $\frac{ER}{3}$

B $\frac{2ER}{3}$

C $\frac{2E}{R}$

D $\frac{3E}{R}$

Turn over for the next question

Do not write outside the box

1 5 The diagram shows a battery connected to an LDR, a fixed resistor and two ammeters A_1 and A_2. The internal resistance of the battery is negligible.

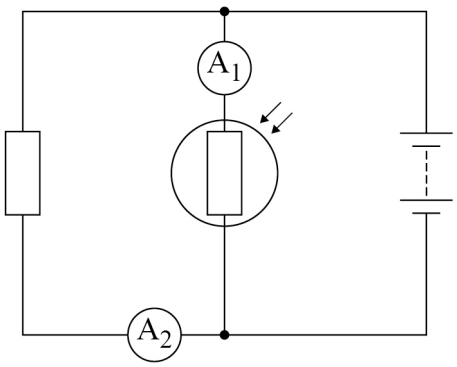

The light intensity incident on the LDR increases.

What will be observed on A_1 and A_2?

[1 mark]

	A_1	A_2	
A	decreasing value	no change	⬭
B	increasing value	no change	⬭
C	decreasing value	decreasing value	⬭
D	increasing value	decreasing value	⬭

Do not write outside the box

1 6 The diagram shows three energy levels for an atom.

The vertical positions of the energy levels are to scale.

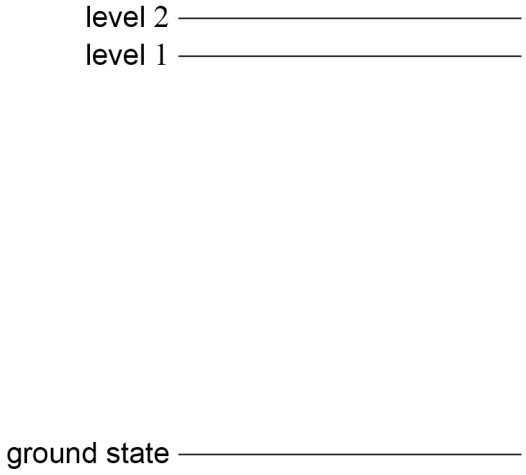

Electron transitions between these levels produce photons with frequencies of:

5.62×10^{14} Hz
3.78×10^{15} Hz
4.34×10^{15} Hz.

What is the energy difference between level 1 and the ground state?

[1 mark]

A 3.7×10^{-19} J ⬭

B 2.1×10^{-18} J ⬭

C 2.5×10^{-18} J ⬭

D 2.9×10^{-18} J ⬭

Turn over for the next question

Do not write outside the box

1 7 A mass–spring system is displaced and then released at time $t = 0$
It oscillates freely.

Which graph shows the variation of kinetic energy E_k with time t for one full oscillation of the system?

[1 mark]

A

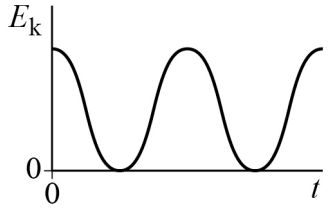

B

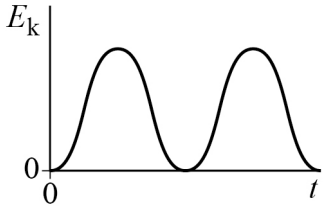

C

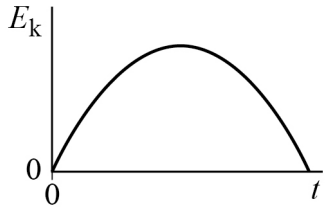

D

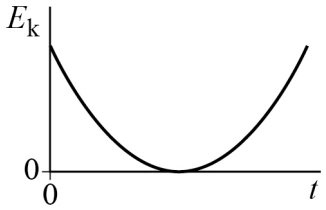

A ⬭

B ⬭

C ⬭

D ⬭

Do not write outside the box

1 8 Wire **X** is made of a material with a resistivity ρ.
X has a length l, a resistance R and a diameter d.

Wire **Y** is made of a material with a resistivity 4ρ.
Y has a length $0.5l$ and a resistance $4R$.

What is the diameter of **Y**?

[1 mark]

A $\frac{d}{2}$

B $\frac{d}{\sqrt{2}}$

C $\sqrt{2}d$

D $2d$

1 9 A water wave of frequency $10\ \text{Hz}$ moves on the surface of a lake. The graph shows the variation of vertical displacement with horizontal position for the water surface at an instant in time.

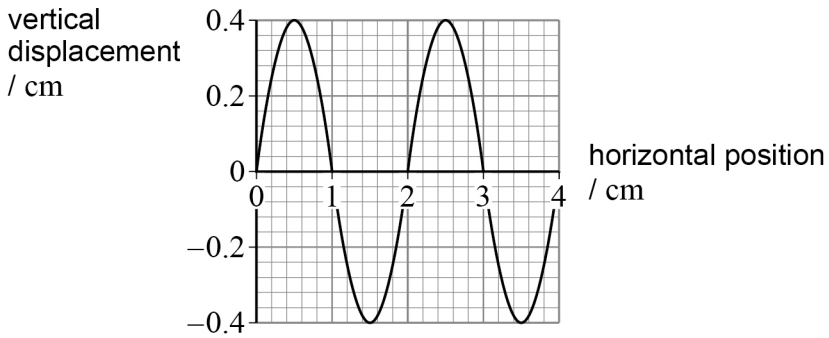

What is the speed of the water wave?

[1 mark]

A $0.20\ \text{cm s}^{-1}$

B $4.0\ \text{cm s}^{-1}$

C $10\ \text{cm s}^{-1}$

D $20\ \text{cm s}^{-1}$

Do not write outside the box

2 0 A progressive wave moves from right to left on a string.
X and **Y** are two points on the string.

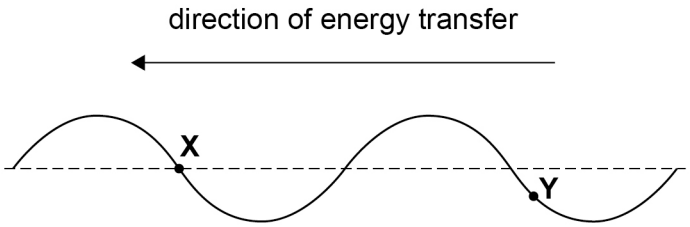

What are the directions of motion of **X** and **Y**?

[1 mark]

	Direction of motion of X	Direction of motion of Y	
A	downwards	downwards	⬭
B	downwards	upwards	⬭
C	upwards	downwards	⬭
D	upwards	upwards	⬭

2 1 Light of wavelength λ is incident normally on a diffraction grating of slit separation 5λ.

The angle between the first-order maximum and the fourth-order maximum on the same side of the central maximum is

[1 mark]

A 11.5° ⬭

B 34.5° ⬭

C 41.6° ⬭

D 53.1° ⬭

Do not write outside the box

2 2 A simple pendulum of length $1.2\ \mathrm{m}$ oscillates freely with a time period T.

What decrease in length will produce a time period of $\frac{T}{2}$?

[1 mark]

A $5\ \mathrm{cm}$ ⬭

B $30\ \mathrm{cm}$ ⬭

C $60\ \mathrm{cm}$ ⬭

D $90\ \mathrm{cm}$ ⬭

2 3 The temperature of a metal wire is decreased.

What happens to the resistance of the wire and to the resistivity of the metal?

[1 mark]

	Resistance	**Resistivity**	
A	decreases	decreases	⬭
B	decreases	doesn't change	⬭
C	doesn't change	decreases	⬭
D	doesn't change	doesn't change	⬭

Turn over for the next question

Do not write outside the box

2 4 A progressive wave travels along a stretched string.
The wave has a frequency of $150\ \mathrm{Hz}$ and a speed of $30\ \mathrm{m\ s^{-1}}$.

What is the phase difference between two points on the string that are $5.0\ \mathrm{cm}$ apart?

[1 mark]

A zero ⬭

B $0.8\ \mathrm{rad}$ ⬭

C $1.6\ \mathrm{rad}$ ⬭

D $3.1\ \mathrm{rad}$ ⬭

Do not write outside the box

2 5 Which is the characteristic of a semiconductor diode?

[1 mark]

A

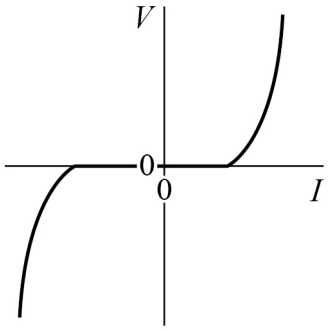

B

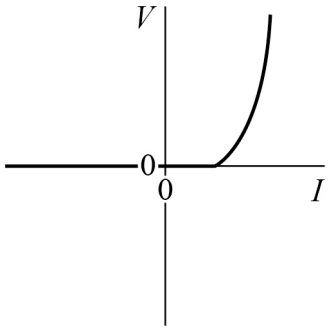

C

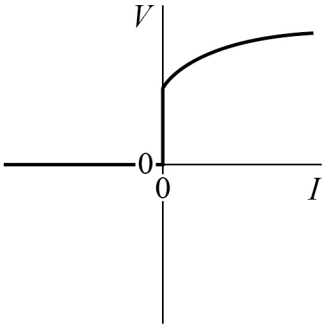

D

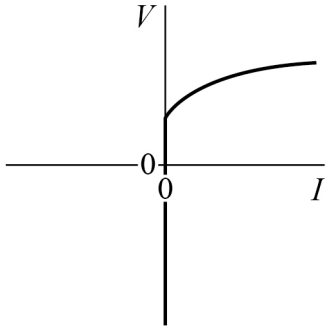

A ⬭

B ⬭

C ⬭

D ⬭

14

END OF QUESTIONS

Do not write outside the box

There are no questions printed on this page

DO NOT WRITE ON THIS PAGE
ANSWER IN THE SPACES PROVIDED

Do not write outside the box

Question number	**Additional page, if required.** **Write the question numbers in the left-hand margin.**

Do not write outside the box

Question number	**Additional page, if required.** **Write the question numbers in the left-hand margin.**

Do not write outside the box

Question number	**Additional page, if required.** **Write the question numbers in the left-hand margin.**

Do not write outside the box

There are no questions printed on this page

DO NOT WRITE ON THIS PAGE
ANSWER IN THE SPACES PROVIDED

Copyright information

For confidentiality purposes, all acknowledgements of third-party copyright material are published in a separate booklet. This booklet is published after each live examination series and is available for free download from www.oxfordaqaexams.org.uk

Permission to reproduce all copyright material has been applied for. In some cases, efforts to contact copyright-holders may have been unsuccessful and Oxford International AQA Examinations will be happy to rectify any omissions of acknowledgements. If you have any queries please contact the Copyright Team.

Copyright © 2023 Oxford International AQA Examinations and its licensors. All rights reserved.