OXFORD

INTERNATIONAL
AQA EXAMINATIONS

Please write clearly in block capitals.

Centre number | | | | | | Candidate number | | | | |

Surname _____

Forename(s) _____

Candidate signature _____
I declare this is my own work.

INTERNATIONAL AS
PHYSICS

Unit 2 Electricity, waves and particles

Time allowed: 2 hours

Materials
For this paper you must have:
- a Data and Formulae Booklet as a loose insert
- a ruler with millimetre measurements
- a scientific calculator, which you are expected to use where appropriate
- a protractor.

Instructions
- Use black ink or black ball-point pen.
- Fill in the boxes at the top of this page.
- Answer **all** questions.
- You must answer the questions in the spaces provided. Do not write outside the box around each page or on blank pages.
- All working must be shown.
- If you need extra space for your answer(s), use the lined pages at the end of this book. Write the question number against your answer(s).
- Do all rough work in this book. Cross through any work you do not want to be marked.

Information
- The marks for questions are shown in brackets.
- The maximum mark for this paper is 80.

For Examiner's Use	
Question	Mark
1	
2	
3	
4	
5	
6	
7	
8	
9	
10	
11–24	
TOTAL	

Do not write outside the box

Section A

Answer **all** questions in this section.

0 1 . 1 State what is meant by the critical temperature of a superconductor.

[1 mark]

0 1 . 2 Explain the advantage of using superconducting materials when making strong electromagnets.

[2 marks]

3

Do not write outside the box

0 2 **Figure 1** shows a cell connected to an external resistor of resistance R.
The internal resistance of the cell is r.

Figure 1

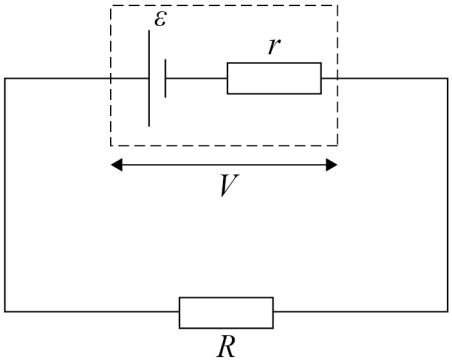

Explain what is meant by the quantities represented by V and ε in **Figure 1**.

[3 marks]

3

Turn over for the next question

Do not write outside the box

0 3 . 1 Show that the critical angle for light travelling from water to air is approximately $49°$.

speed of light in water $= 2.25 \times 10^8 \text{ m s}^{-1}$

[2 marks]

Figure 2 shows a pool of water with a lamp at position **L**.
L is at the bottom of the pool, halfway across the pool at one end.
P is a point on the surface of the water at the centre of the pool.
The pool is 7.0 m long and the water is 2.5 m deep.
The surface of the water is smooth.

Figure 2

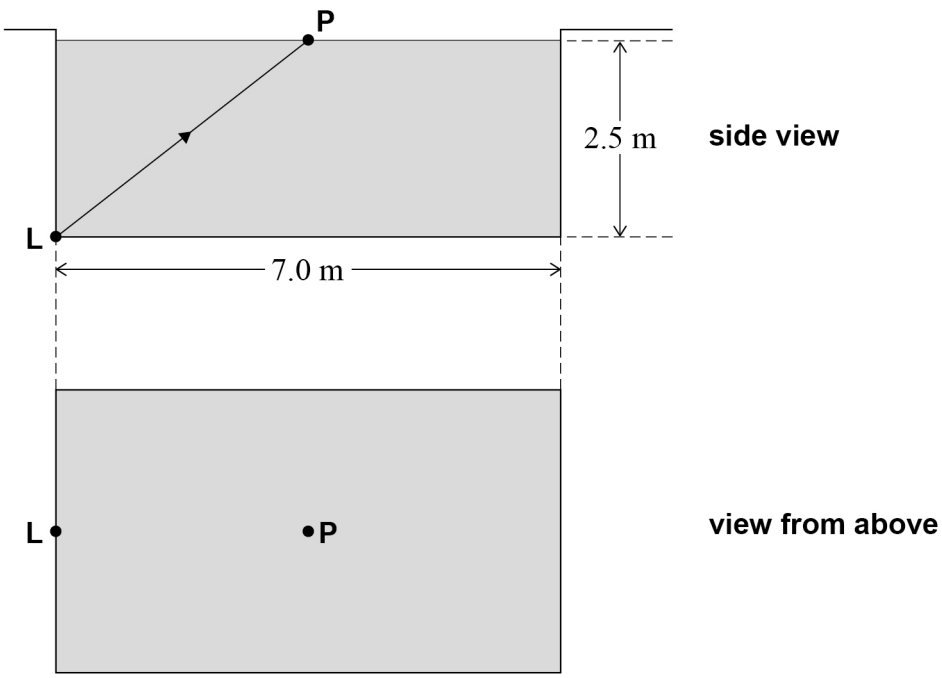

Do not write outside the box

0 3 . 2 State and explain whether a ray of light from **L** can emerge from the water at **P**. Support your answer with a calculation.

[2 marks]

Question 3 continues on the next page

Do not write outside the box

0 3 . 3 **Figure 3** shows the same pool with small waves moving continuously along the surface from left to right.

Figure 3

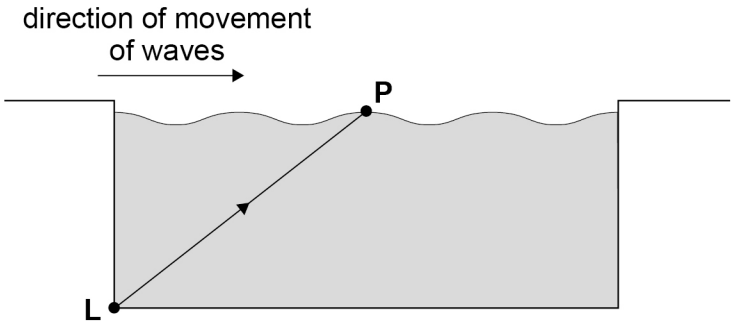

Suggest, using one or more diagrams, whether a ray of light from **L** can emerge from the water at **P** as the waves move.

[3 marks]

7

Do not write outside the box

0 4 . 1 State what is meant by monochromatic light.

[1 mark]

0 4 . 2 Explain the benefit of using monochromatic light in optical fibres.

[2 marks]

0 4 . 3 **Figure 4** shows a simple optical fibre consisting of a thin cylinder of glass in air.

Figure 4

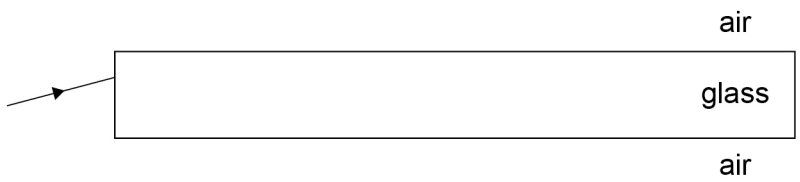

Explain how changes to this design can reduce modal dispersion.

[3 marks]

6

Turn over ►

Do not write outside the box

0 5 **Figure 5** shows the energy levels in a hydrogen atom.
The arrow indicates one transition.

Figure 5

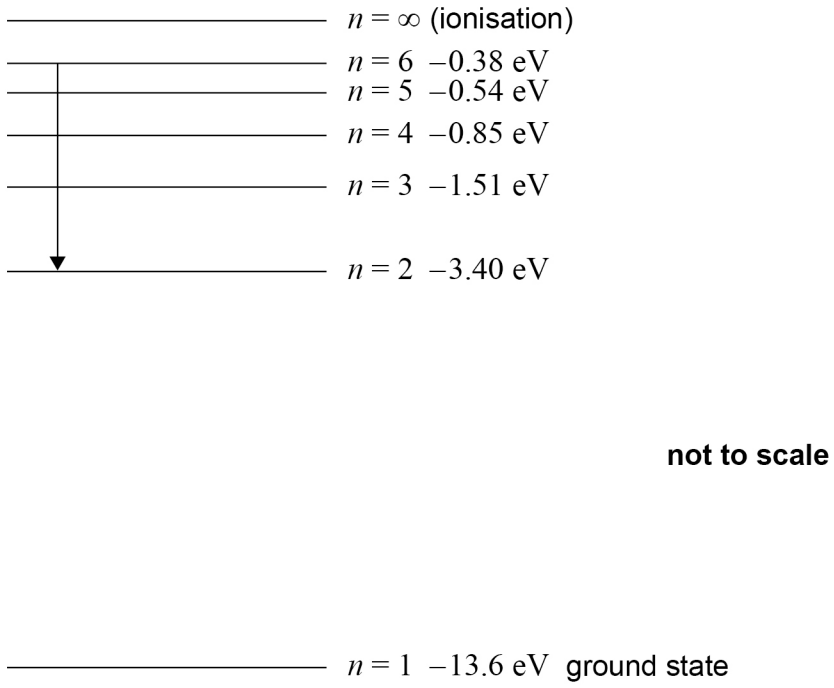

0 5 . 1 State the energy associated with the $n = \infty$ (ionisation) level.

[1 mark]

_____

0 5 . 2 The transition shown in **Figure 5** produces a photon of violet light.

Draw, on **Figure 5**, an arrow to represent a transition that would produce a photon in the ultraviolet part of the spectrum.

[1 mark]

Do not write outside the box

0 5 . 3 Calculate the lowest frequency of a photon that can be emitted during any transition to the $n = 2$ level on **Figure 5**.

[4 marks]

frequency = _____ Hz

6

Turn over for the next question

Do not write outside the box

0 6 . 1 An electron is accelerated from rest through a potential difference V.

Show that the final momentum p of the electron is given by

$$p = \sqrt{2em_e V}$$

[3 marks]

0 6 . 2 The spacing between layers of atoms in a crystal is 2.0×10^{-10} m.

Estimate the momentum of electrons that will give an observable diffraction pattern of the crystal.

[2 marks]

momentum = _____ kg m s^{-1}

Do not write outside the box

0 6 . 3 State the assumption that you made in Question **06.2**.

[1 mark]

_____

_____

0 6 . 4 Calculate the potential difference needed to accelerate electrons from rest so that they have the momentum that you estimated in Question **06.2**.

[1 mark]

potential difference = _____ V

7

Turn over for the next question

Do not write outside the box

0 7 . 1 Sketch, on **Figure 6**, a graph to show the variation of resistance with temperature for a negative temperature coefficient thermistor for temperatures in the range of 0 °C to 100 °C.

[1 mark]

Figure 6

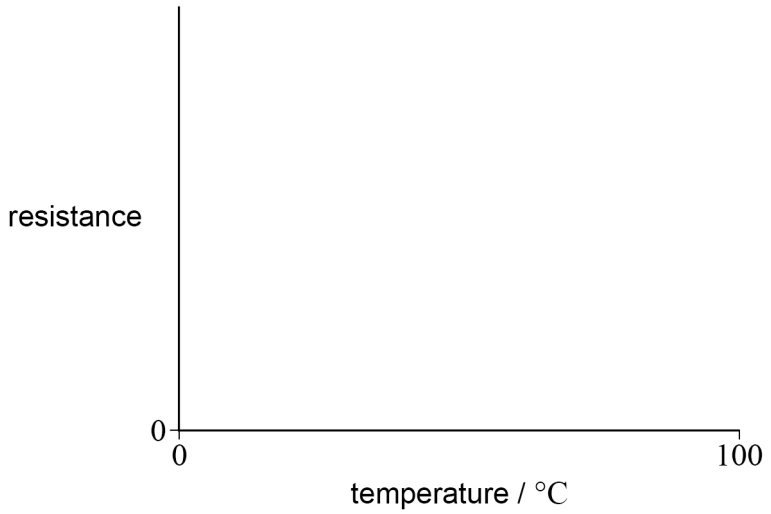

Do not write outside the box

0 7 . 2 Describe how you would perform an experiment to measure the variation of resistance with temperature for the thermistor in the temperature range of 0 °C to 100 °C.

Your description should include:

- a labelled diagram of the apparatus you would use
- the procedure you would use
- the measurements you would make.

[5 marks]

6

Do not write outside the box

0 8 Two loudspeakers emit sound waves that are coherent.

0 8 . 1 State what is meant by coherent.

[2 marks]

The two loudspeakers are $8.4\ \mathrm{m}$ apart in a large open space, as shown in **Figure 7**.
Two microphones **A** and **B** are placed $0.62\ \mathrm{m}$ apart in front of the loudspeakers.
A is the same distance from each speaker.
The perpendicular distance between the loudspeakers and the microphones is $13.0\ \mathrm{m}$.

Figure 7

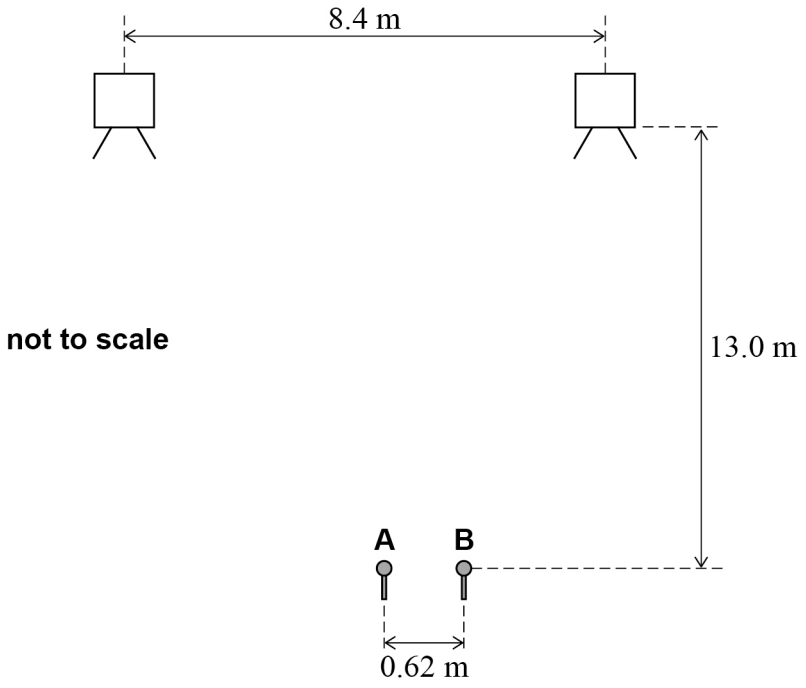

Microphone **A** detects a sound signal from the loudspeakers. The sound intensity detected at microphone **B** is zero.

Do not write outside the box

0 8 . 2 Explain why the intensity of sound at microphone **B** is zero.

[3 marks]

0 8 . 3 Calculate the frequency of the sound emitted by the loudspeakers.
There is no other position of zero intensity between **A** and **B**.
The speed of sound in air is $340\ \mathrm{m\ s^{-1}}$.

[3 marks]

frequency = _____ Hz

Question 8 continues on the next page

Do not write outside the box

0 8 . 4 The frequency of the sound from the loudspeakers is slowly increased.
The loudspeakers continue to be coherent sources.

Explain how this frequency increase affects the intensity of sound detected by microphones **A** and **B**.

[2 marks]

0 8 . 5 The arrangement of loudspeakers and microphones is placed inside a room.

Suggest why the maximum and minimum intensities of sound detected by **A** and **B** are not as well defined when the arrangement is placed in the room.

[2 marks]

12

END OF SECTION A

Do not write outside the box

Section B

Answer **all** questions in this section.

0 9 **Figure 8** shows a circuit used to measure the resistance of a resistor **R**.

A metre of uniform resistance wire is attached to a metre ruler between crocodile clips **A** and **B**.
Crocodile clip **C** can be moved along the wire between **A** and **B**.
Q is a resistor of known resistance.

Figure 8

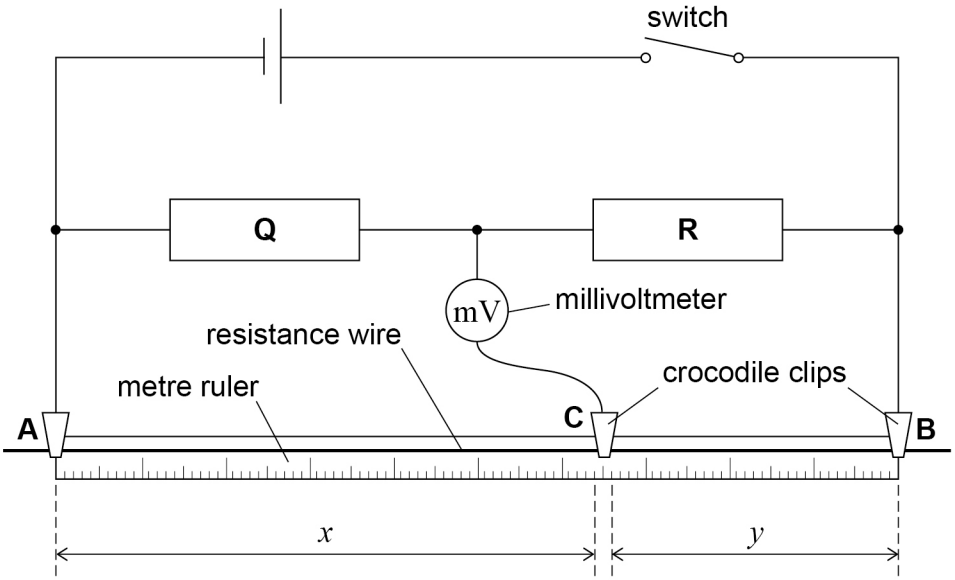

The switch is closed and crocodile clip **C** is moved along the resistance wire until the millivoltmeter reads zero.

0 9 . 1 Compare the potential difference (pd) across resistor **Q** with the pd across the wire between **A** and **C** when the millivoltmeter reads zero.

[1 mark]

_____

_____

Question 9 continues on the next page

Do not write outside the box

A $4.7\ \Omega \pm 2\%$ resistor is chosen for **Q**.
The position of **C** is adjusted five times so that, each time, the millivoltmeter reads zero.
Each time, the length x of the wire between **A** and **C** and the length y of the wire between **C** and **B** are measured.

Table 1 shows the results.

Table 1

test	**1**	**2**	**3**	**4**	**5**
x / **mm**	539	541	537	540	538
y / **mm**	457	455	459	456	458
$\frac{x}{y}$	1.18	1.19	1.17	1.18	1.17

0 9 . 2 Show that the uncertainty in the mean value of $\frac{x}{y}$ is less than 1%.

[3 marks]

Do not write outside the box

0 9 . 3 The experiment is repeated for five more values of resistor **Q**.
These data are plotted on **Figure 9**.

Plot, on **Figure 9**, the corresponding data point when the resistance of **Q** is 4.7 Ω.
Draw an error bar to show the range of possible values of the resistance of **Q**.

[1 mark]

Figure 9

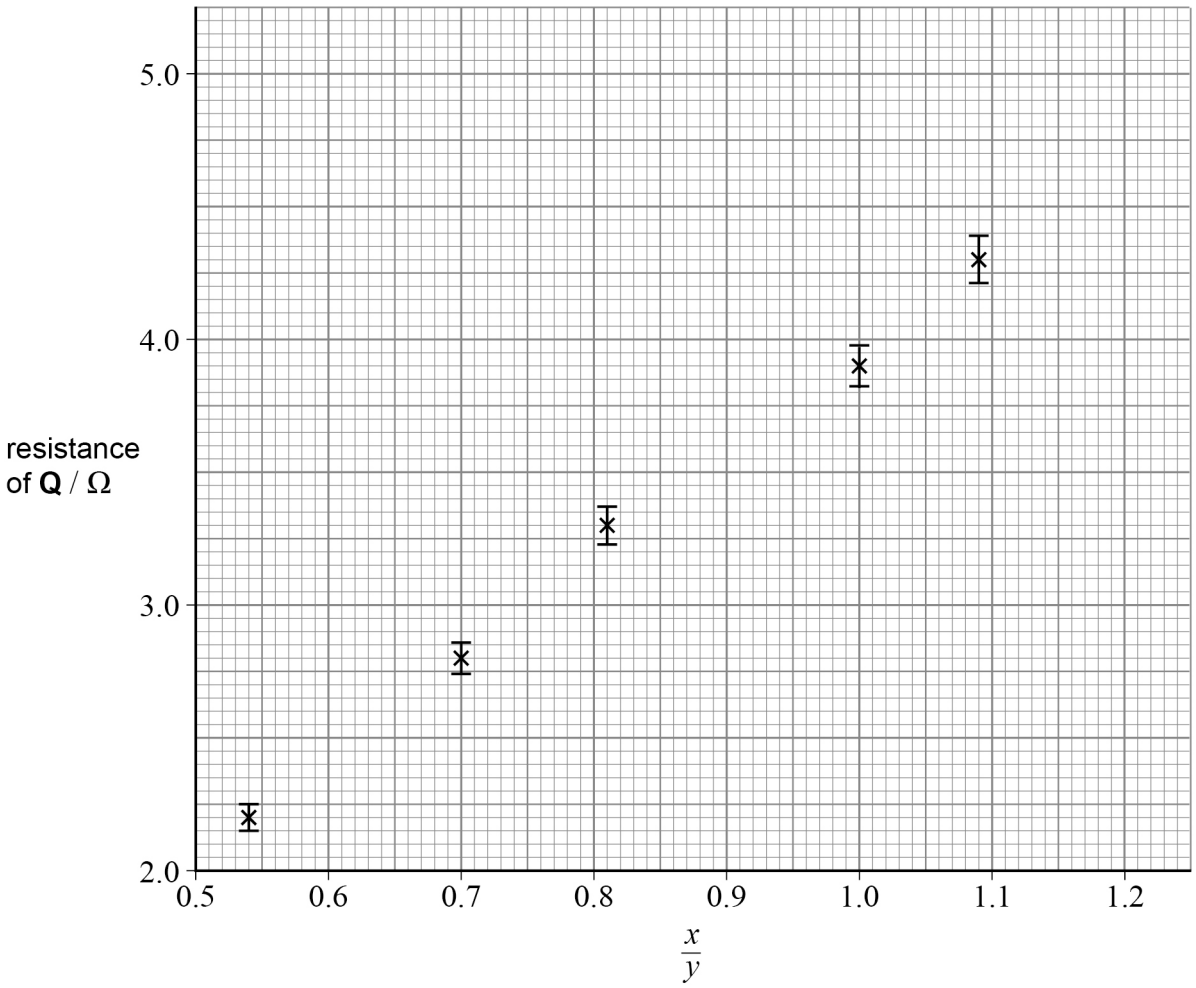

0 9 . 4 Draw a line of best fit on **Figure 9**.

[1 mark]

Question 9 continues on the next page

Do not write outside the box

0 9 . 5 The relationship between the resistances of **Q** and **R** is

$$\frac{\text{resistance of } \mathbf{Q}}{\text{resistance of } \mathbf{R}} = \frac{x}{y}$$

Determine, from your graph, the resistance of **R**.

[3 marks]

resistance of **R** = _____ Ω

9

Do not write outside the box

1 0 **Figure 10** shows a resistor made from a thin film of material of resistivity $2.8 \times 10^{-3}\ \Omega\ \mathrm{m}$.

Figure 10

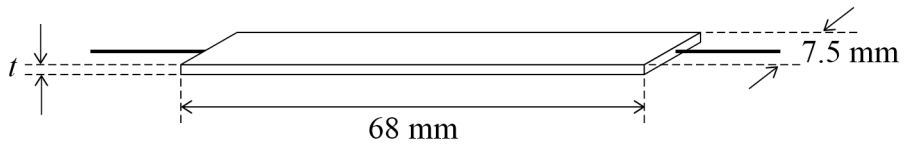

The resistor is 68 mm long and 7.5 mm wide.
The resistance of the resistor is 570 Ω.

1 0 . 1 Calculate, in m, the thickness t of the resistor.

[2 marks]

t = _____ m

Question 10 continues on the next page

Do not write outside the box

The resistor is made into a potential divider that is used in a fuel gauge for a car's fuel tank.
Figure 11A shows the sliding electrical contact made by one end of a pivoted conducting rod. The other end of the rod is attached to a float that is always at the top surface of the fuel in the tank as shown in **Figure 11B** and **Figure 11C**.

A 12 V battery is connected across the resistor. A voltmeter measures the pd across one part of the resistor and acts as the fuel gauge.

Figure 11B shows the fuel gauge in a full fuel tank.
Figure 11C shows the fuel gauge in an almost empty tank.

Figure 11A

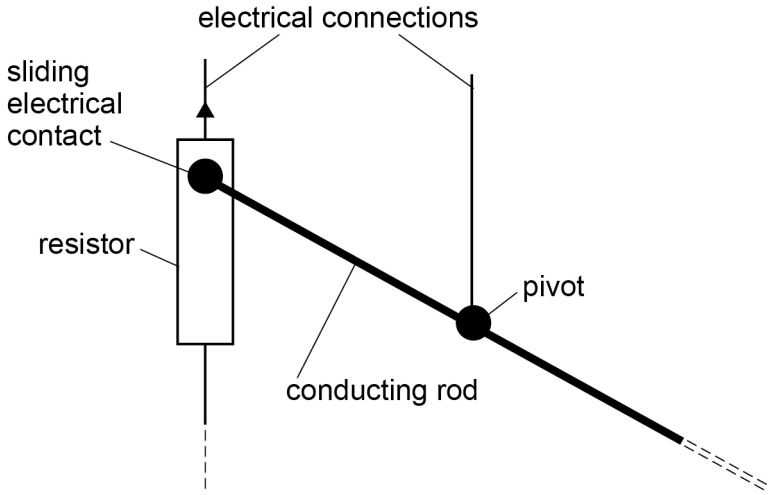

Figure 11B

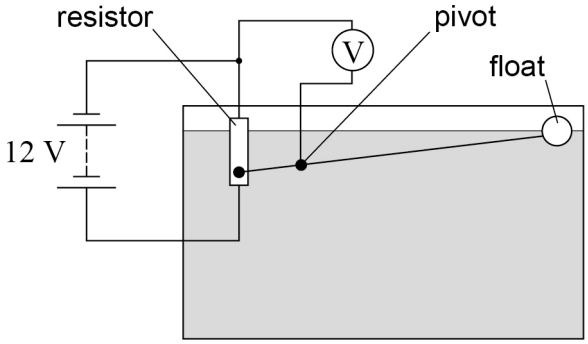

Figure 11C

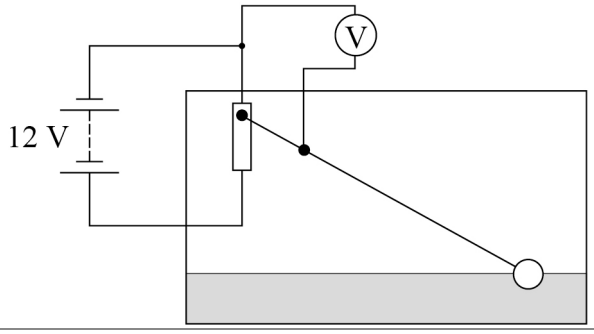

Do not write outside the box

1 0 . 2 Explain the changes to the voltmeter reading as the level of the fuel in the tank falls.

[2 marks]

_____

_____

_____

_____

_____

1 0 . 3 Calculate the rate of energy transfer in the resistor connected to the 12 V battery.

[2 marks]

rate of energy transfer = _____ W

1 0 . 4 The resistor is changed to one of greater resistance.

State any effect that the change has on the operation of the fuel gauge.

[1 mark]

_____

_____

7

END OF SECTION B

Do not write outside the box

Section C

Each of the questions in this section is followed by four responses, **A**, **B**, **C** and **D**.

For each question select the best response.

Only **one** answer per question is allowed.
For each question, completely fill in the circle alongside the appropriate answer.

CORRECT METHOD ⬬ WRONG METHODS

If you want to change your answer you must cross out your original answer as shown.

If you wish to return to an answer previously crossed out, ring the answer you now wish to select as shown.

You may do your working in the blank space around each question but this will not be marked. Do **not** use additional pages for this working.

1 1 What is the fundamental (base) unit equivalent of the ohm?

[1 mark]

A $\text{kg m s}^{-2}\text{ A}^{-2}$

B $\text{kg m}^{2}\text{ s}^{-3}\text{ A}^{-2}$

C $\text{kg m s}^{-1}\text{ C}^{-2}$

D $\text{kg m}^{2}\text{ s}^{-3}\text{ C}^{-2}$

Do not write outside the box

1 2 The graph shows the variation of current with potential difference for an ideal semiconductor diode.

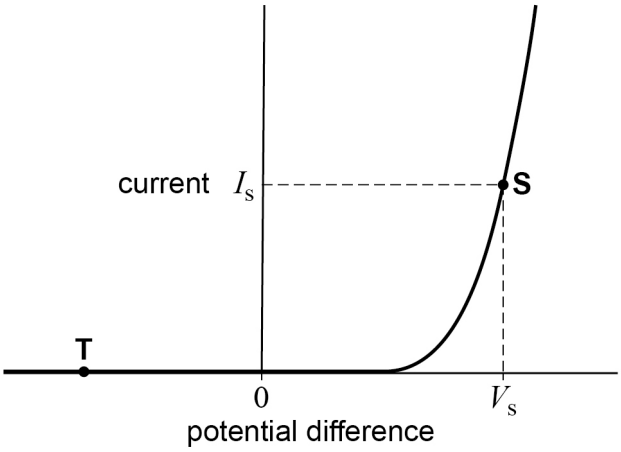

Which row gives the resistance of the semiconductor diode at the points marked **S** and **T**?

[1 mark]

	Resistance at S	Resistance at T	
A	$\frac{V_s}{I_s}$	infinite	⬭
B	$\frac{V_s}{I_s}$	zero	⬭
C	the gradient of the graph at **S**	infinite	⬭
D	the gradient of the graph at **S**	zero	⬭

Turn over for the next question

Do not write outside the box

1 3

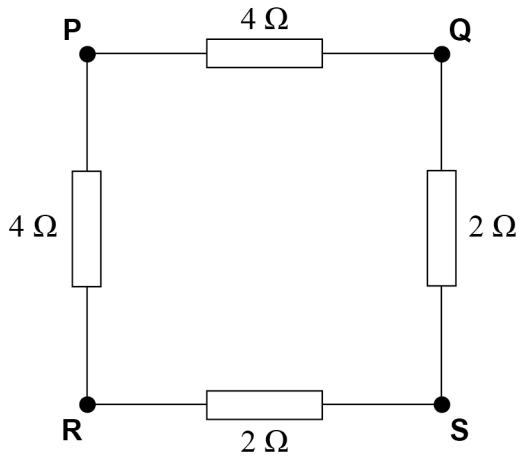

The resistance of the network shown is a minimum when connected across

[1 mark]

A **P** and **S**.

B **P** and **R**.

C **Q** and **R**.

D **Q** and **S**.

1 4 What are the resistances of ideal voltmeters and ideal ammeters?

[1 mark]

	Ideal voltmeter resistance	**Ideal ammeter resistance**
A	infinite	zero
B	infinite	infinite
C	zero	zero
D	zero	infinite

Do not write outside the box

1 5 A vertical spring of stiffness k supports an object of mass m.
The frequency of oscillation of the mass–spring system is f.
A second vertical spring has a stiffness $2k$ and supports an object of mass $3m$.

What is the frequency of oscillation of the second mass–spring system?

[1 mark]

A $1.5f$

B $1.2f$

C $0.82f$

D $0.67f$

1 6 A point source of gamma radiation emits 1.0×10^5 gamma photons per second.

What is the gamma intensity at a distance of $4.0\ \mathrm{m}$ from the source?
Ignore background radiation.

[1 mark]

A 380 photons $\mathrm{m^{-2}\ s^{-1}}$

B 500 photons $\mathrm{m^{-2}\ s^{-1}}$

C 6250 photons $\mathrm{m^{-2}\ s^{-1}}$

D $25\ 000$ photons $\mathrm{m^{-2}\ s^{-1}}$

1 7 Ultrasound is used in medical diagnosis because high-frequency sound waves

[1 mark]

A change frequency when they cross tissue boundaries.

B are not attenuated in soft tissues.

C travel at the same speed in different tissues.

D are reflected well at tissue boundaries.

Do not write outside the box

1 8 A stretched string has a length l and a tension T.
The mass per unit length of the string is μ.
A second string has a length $0.6l$ and mass per unit length 0.8μ.

What is the tension of the second string when it vibrates with the same fundamental frequency as the first string?

[1 mark]

A $0.23T$

B $0.29T$

C $0.45T$

D $0.48T$

1 9 Loudspeaker **P** emits sound of frequency $50\ \text{Hz}$.
Loudspeaker **Q** emits sound of frequency $60\ \text{Hz}$.
At time $t = 0$ **P** and **Q** are in phase.

When will **P** and **Q** next be in phase?

[1 mark]

A $t = 0.10\ \text{s}$

B $t = 0.25\ \text{s}$

C $t = 0.50\ \text{s}$

D $t = 0.75\ \text{s}$

2 0 What does **not** contribute to the formation of a spectrum when light passes through a diffraction grating?

[1 mark]

A destructive interference

B diffraction at the slits

C constructive interference

D polarisation at the slits

Do not write outside the box

2 1 A diffraction grating has a spacing of 100 lines mm^{-1}.

Light of wavelength 6.33×10^{-7} m is incident normally on the grating.

What is the angle between the two second-order diffraction maxima?

[1 mark]

A $3.6°$

B $7.3°$

C $14.5°$

D $29.1°$

2 2 The graph shows the spectrum of X-rays produced using an anode–cathode potential difference of 30 kV.

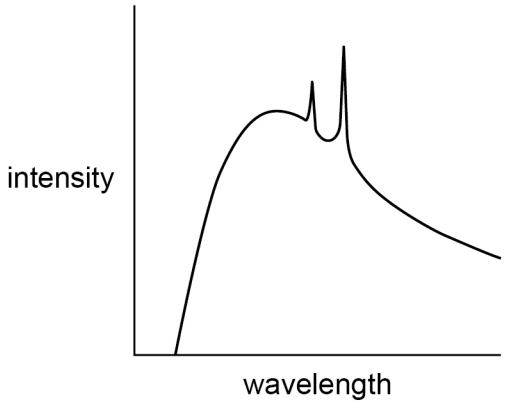

Which will **not** increase when the anode–cathode potential difference is increased?

[1 mark]

A the intensity at any point of the continuous spectrum

B the intensity of the characteristic peaks

C the frequency of the characteristic peaks

D the minimum frequency of the continuous spectrum

Do not write outside the box

2 3 The photoelectric effect provides evidence that

[1 mark]

A electrons can have wave-like properties. ⬭

B electrons always behave as particles. ⬭

C electromagnetic waves can have particle-like properties. ⬭

D electromagnetic waves always behave as waves. ⬭

2 4 Light is incident on a metal surface. The graph shows the variation of maximum photoelectron kinetic energy $E_{k(max)}$ with the frequency f of incident light in the photoelectric effect.

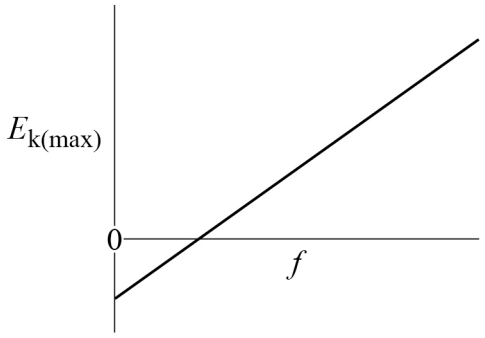

The original line is shown as dotted in all of the graphs on page 31.

Which graph shows the variation of $E_{k(max)}$ with f for a metal with a greater work function?

[1 mark]

Do not write outside the box

A

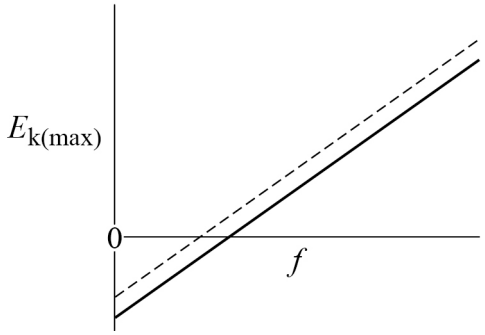

B

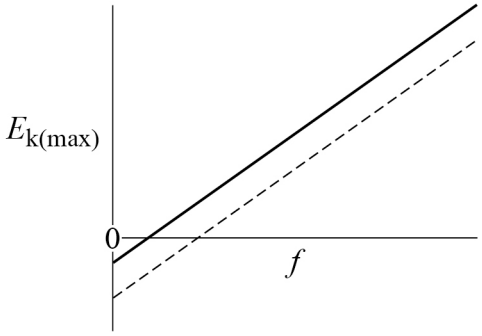

C

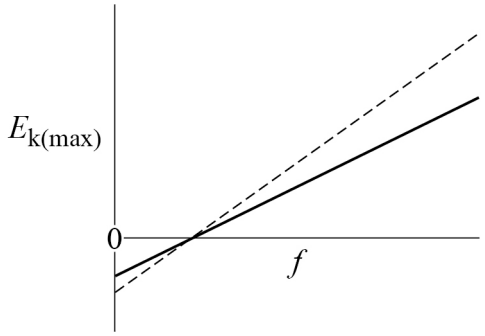

D

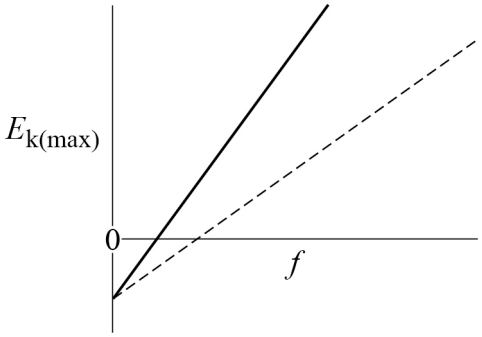

A ⬭

B ⬭

C ⬭

D ⬭

14

END OF QUESTIONS

Do not write outside the box

There are no questions printed on this page

DO NOT WRITE ON THIS PAGE
ANSWER IN THE SPACES PROVIDED

Do not write outside the box

Question number	**Additional page, if required.** **Write the question numbers in the left-hand margin.**

Do not write outside the box

Question number	**Additional page, if required.** **Write the question numbers in the left-hand margin.**

Do not write outside the box

Question number	**Additional page, if required.** **Write the question numbers in the left-hand margin.**

Do not write outside the box

There are no questions printed on this page

DO NOT WRITE ON THIS PAGE
ANSWER IN THE SPACES PROVIDED

Copyright information

For confidentiality purposes, all acknowledgements of third-party copyright material are published in a separate booklet. This booklet is published after each live examination series and is available for free download from www.oxfordaqaexams.org.uk.

Permission to reproduce all copyright material has been applied for. In some cases, efforts to contact copyright-holders may have been unsuccessful and Oxford International AQA Examinations will be happy to rectify any omissions of acknowledgements. If you have any queries please contact the Copyright Team.

Copyright © 2022 Oxford International AQA Examinations and its licensors. All rights reserved.