OXFORD AQA

INTERNATIONAL QUALIFICATIONS

Please write clearly in block capitals.

Centre number | | | | | | Candidate number | | | | |

Surname _____

Forename(s) _____

Candidate signature _____
I declare this is my own work.

INTERNATIONAL AS
PHYSICS

Unit 2 Electricity, waves and particles

Monday 8 January 2024 07:00 GMT Time allowed: 2 hours

Materials

For this paper you must have:
- a Data and Formulae Booklet as a loose insert
- a ruler with millimetre measurements
- a scientific calculator, which you are expected to use where appropriate
- a protractor.

Instructions
- Use black ink or black ball-point pen.
- Fill in the boxes at the top of this page.
- Answer **all** questions.
- You must answer the questions in the spaces provided. Do not write outside the box around each page or on blank pages.
- All working must be shown.
- If you need extra space for your answer(s), use the lined pages at the end of this book. Write the question number against your answer(s).
- Do all rough work in this book. Cross through any work you do not want to be marked.

Information
- The marks for questions are shown in brackets.
- The maximum mark for this paper is 80.

For Examiner's Use	
Question	Mark
1	
2	
3	
4	
5	
6	
7	
8	
9	
10	
11–24	
TOTAL	

Do not write outside the box

Section A

Answer **all** questions in this section.

0 1 A mercury atom in a fluorescent tube is excited from its ground state by a collision with an electron.

The mercury atom emits an ultraviolet photon of energy 5.2 eV.

0 1 . 1 Calculate the wavelength of the photon.

[2 marks]

wavelength = _____ m

0 1 . 2 Explain how this ultraviolet photon causes the production of visible light from the fluorescent tube.

[3 marks]

_____

_____

_____

_____

_____

_____

_____

_____

_____

5

Do not write outside the box

0 2 A string vibrates between two fixed points **A** and **B**.

Figure 1 shows one position of the string when vibrating at the first harmonic.

Figure 1

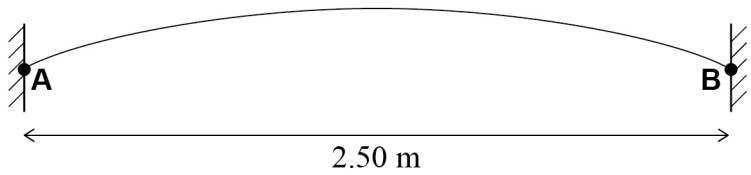

The frequency of the first harmonic is 65 Hz.
The tension in the string is 22 N.
The distance **AB** is 2.50 m.

0 2 . 1 Calculate the mass of the string.

[3 marks]

mass = _____ kg

0 2 . 2 The frequency of vibration is increased to form a new stationary wave on the string.
The nodes along the line **AB** are now separated by 0.50 m.

Determine the frequency of the new stationary wave.

[1 mark]

frequency = _____ Hz

4

Turn over ►

Do not write outside the box

0 3 Explain why the spectrum from an X-ray tube has characteristic lines.

[3 marks]

3

Do not write outside the box

0 4 **Figure 2** shows the variation of displacement of a loudspeaker cone with time t.

Figure 2

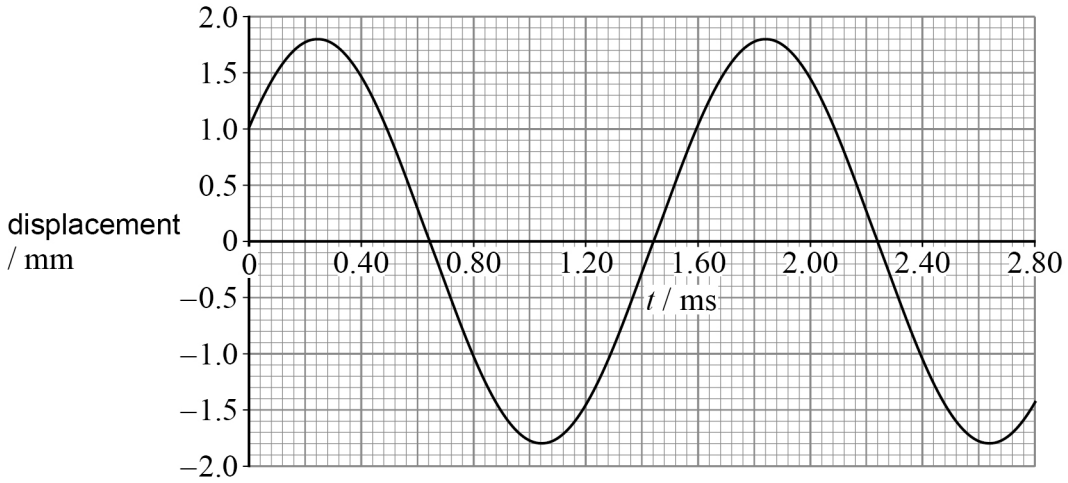

0 4 . 1 Determine the total distance travelled by the cone during one complete oscillation.

[2 marks]

distance = _____ mm

0 4 . 2 Determine, in s, the period of oscillation of the cone.

[1 mark]

period = _____ s

0 4 . 3 Deduce the displacement of the cone at $t = 4.00$ ms.

[1 mark]

displacement = _____ mm

0 4 . 4 Calculate the frequency of oscillation of the cone.

[1 mark]

frequency = _____ Hz

5

Turn over ►

Do not write outside the box

0 5 A student plans to determine the resistance of a fixed resistor **R**.

0 5 . 1 State what is meant by the resistance of **R**.

[1 mark]

The student uses the circuit shown in **Figure 3**.
The internal resistance of the battery is negligible.

Figure 3

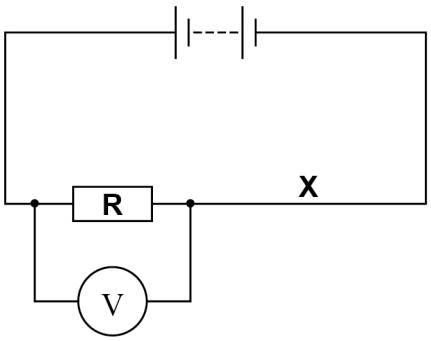

The voltmeter reading is V_1. The voltmeter is ideal.

The student then adds a **non-ideal** ammeter at point **X**.
The voltmeter reading decreases.

The new voltmeter reading is V_2. The ammeter reading is I.

0 5 . 2 Explain why V_2 is smaller than V_1.

[3 marks]

Do not write outside the box

0 5 . 3 The student uses V_2 and I to determine the resistance of **R**.

Explain whether this determination is valid.

[1 mark]

_____

_____

_____

5

Turn over for the next question

Do not write outside the box

0 6 **Figure 4** shows a simple pendulum of length $0.805\ \mathrm{m}$ suspended from point **P**.

Figure 4

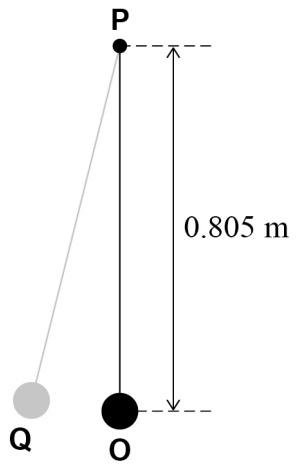

The pendulum is displaced through a small angle from the equilibrium position **O** to **Q**. Moving from **O** to **Q** increases the gravitational potential energy E_p of the pendulum by $7.8\ \mathrm{mJ}$.

The pendulum is released from rest at **Q** at time $t = 0$ and then oscillates freely. The period of the pendulum is $1.80\ \mathrm{s}$.

0 6 . 1 Sketch, on **Figure 5**, the variation of kinetic energy E_k of the pendulum with t for one complete oscillation.

Label each axis with a suitable scale.
The time axis on your graph should begin at $t = 0$

[3 marks]

Figure 5

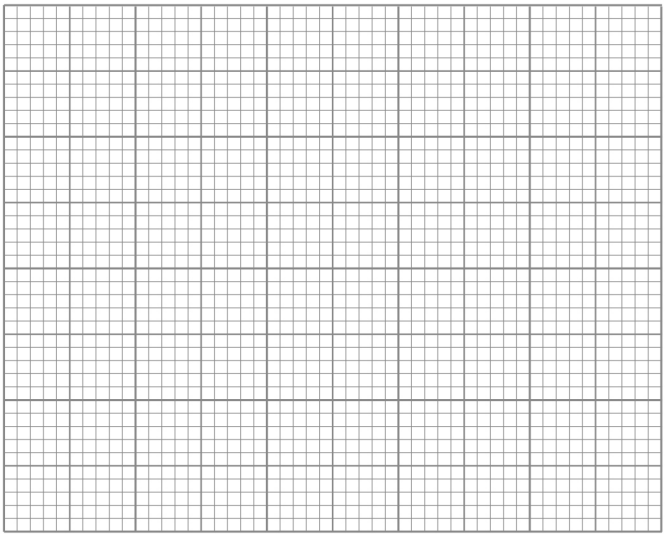

Do not write outside the box

Figure 6 shows a bar placed at a vertical distance x below **P**.

Figure 6

not to scale

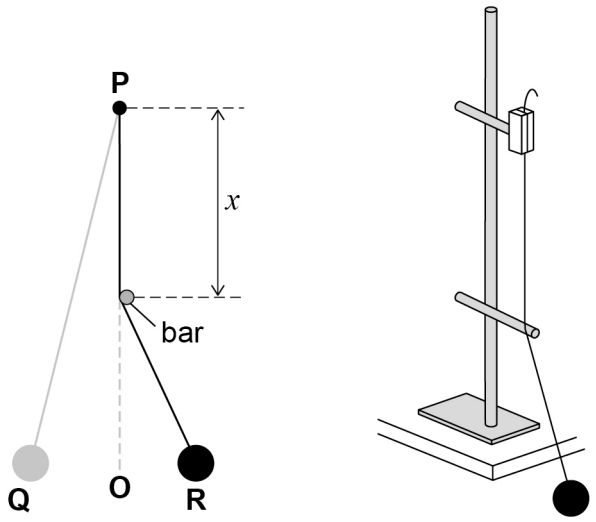

The pendulum is again released from rest at **Q**. The string makes contact with the bar. The pendulum reaches its maximum displacement at **R**. No energy transfer occurs between the string and the bar.

When the pendulum is oscillating between **O** and **R**, the pendulum length is $(0.805 - x)$ m. The pendulum takes 1.61 s to move from **Q** to **R** and back to **Q**.

0 6 . 2 Show that the period for a pendulum with length $(0.805 - x)$ m is approximately 1.4 s.

[3 marks]

0 6 . 3 Calculate x.

[3 marks]

$x =$ _____ m

Turn over ►

Do not write outside the box

0 6 . 4 An energy transfer between E_p and E_k occurs as the pendulum oscillates between **Q** and **O** and as it oscillates between **O** and **R**.

Deduce whether the rate of energy transfer is greater between **Q** and **O** or between **O** and **R**.

[2 marks]

11

Do not write outside the box

Turn over for the next question

DO NOT WRITE ON THIS PAGE
ANSWER IN THE SPACES PROVIDED

Do not write outside the box

0 7 . 1 Describe the nature of a longitudinal wave.

[2 marks]

An ultrasonic thickness gauge (UTG) uses ultrasound waves to determine the thickness of solid materials.

Figure 7 shows the UTG on a copper block of thickness x.

Figure 7

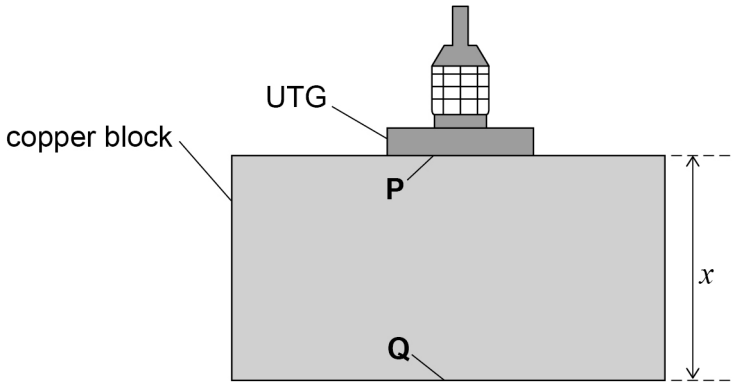

The UTG emits a very short pulse of ultrasound into the block at **P**.
The UTG then detects the waves reflected from **Q**.
Multiple reflections occur at the surfaces of the block as shown in **Figures 8a** and **8b**.
The paths of the waves are vertical but are shown at an angle for clarity.

Figure 8a

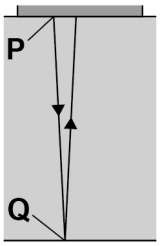

Figure 8b

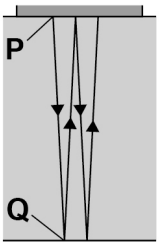

Do not write outside the box

Figure 9 shows the variation of ultrasound intensity with time as detected by the UTG.

Figure 9

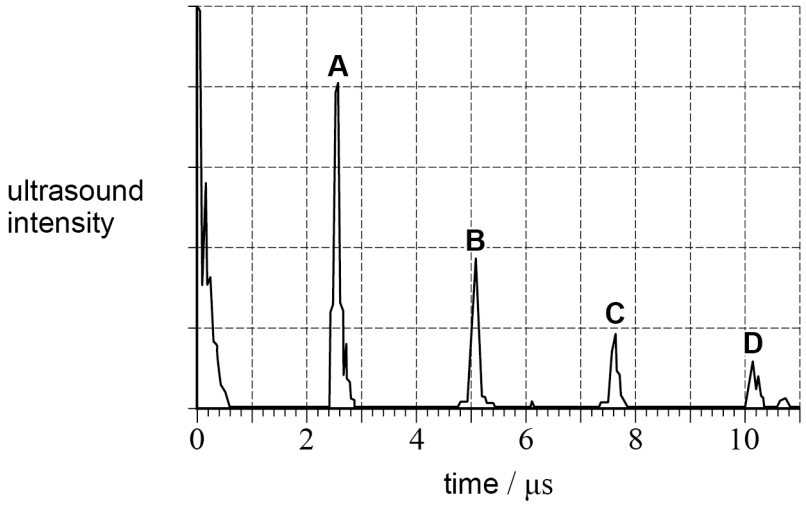

Peak **A** is detected when the pulse reflects once at **Q** as shown in **Figure 8a**.
Peak **B** is detected when the pulse reflects twice at **Q** as shown in **Figure 8b**.
Peaks **C** and **D** are produced by further reflections at **Q**.

0 7 . 2 The speed of the ultrasound in the block is $4660\ \mathrm{m\ s^{-1}}$.

Determine x.

[3 marks]

$x =$ _____ m

Question 7 continues on the next page

Do not write outside the box

The UTG is used to measure the thickness of a painted copper pipe.
Figure 10 shows the UTG on the outer surface of the pipe.
The figure also shows two paths **R** and **S** taken by the ultrasound.

The paint has a depth d and the pipe wall has a thickness y.

Figure 10

not to scale

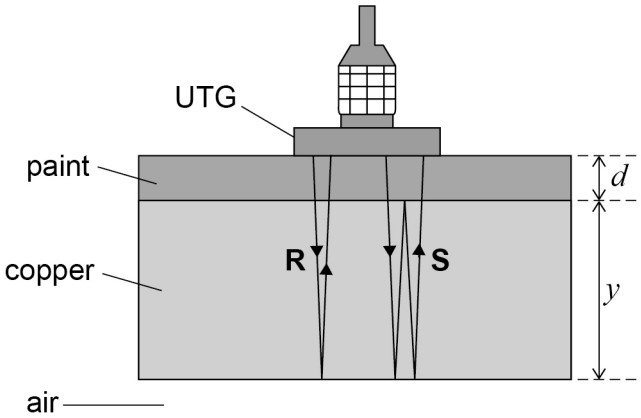

The speed of ultrasound in the paint is much less than in copper.

0 7 . 3 An engineer uses the timing for path **R** to determine y.

Explain why the engineer's determination of y is **not** accurate.

[2 marks]

_____

_____

_____

_____

0 7 . 4 An accurate determination of y can be made by analysing reflections **R** and **S**.

Show that the path difference between **R** and **S** is independent of d.

[2 marks]

9

Do not write outside the box

Turn over for the next question

DO NOT WRITE ON THIS PAGE
ANSWER IN THE SPACES PROVIDED

Do not write outside the box

0 8 **Figure 11** shows a circuit containing two identical car headlamps **X** and **Y**.

The battery has an emf of 12.8 V and an internal resistance of 61.0 mΩ.

Figure 11

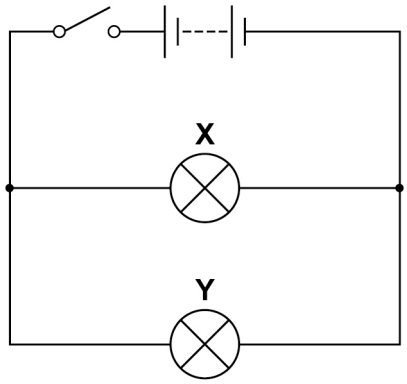

0 8 . 1 Both lamps turn on when the switch is closed.
Each lamp now has a resistance of 2.40 Ω.

Show that the total resistance of the circuit is approximately 1.3 Ω.

[2 marks]

0 8 . 2 Determine the terminal pd of the battery.

[2 marks]

terminal pd = _____ V

Do not write outside the box

Lamp **Y** fails and is replaced with lamp **Z**, as shown in **Figure 12**.

Figure 12

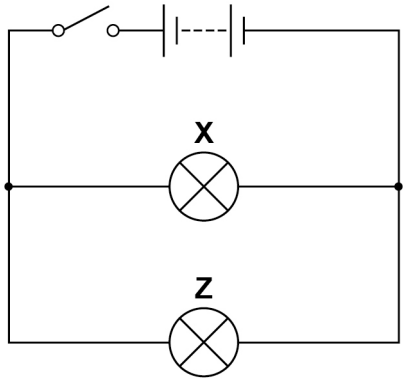

The switch is closed and both lamps are on.
The resistance of **Z** is greater than $2.40\ \Omega$. The resistance of **X** remains at $2.40\ \Omega$.

The terminal pd is now different from the terminal pd in the circuit in **Figure 11**.

0 8 . 3 Explain this change to the terminal pd.

[2 marks]

0 8 . 4 Explain why the power transferred by **X** in **Figure 12** is different from the power transferred by **X** in **Figure 11**.

[2 marks]

8

END OF SECTION A

Do not write outside the box

Section B

Answer **all** questions in this section.

0 9 A student uses the experimental arrangement shown in **Figure 13** to determine a value for the Planck constant h.

Figure 13

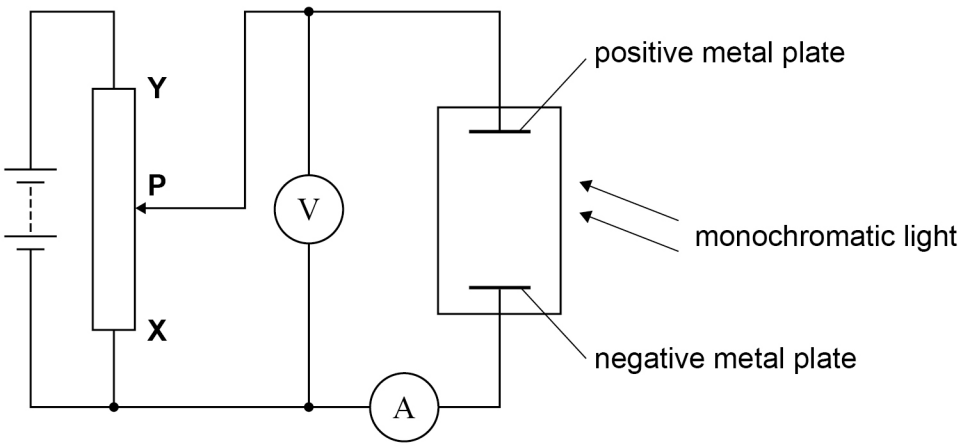

The positive metal plate is illuminated with monochromatic light of known frequency f. The ammeter detects a current.

The student then adjusts the potential difference between the plates by slowly sliding contact **P** towards **Y**. She records the minimum pd V for which the ammeter reading is zero.

The student obtains values of V for different values of f.
She plots a graph of V against f as shown in **Figure 14**.

Do not write outside the box

Figure 14

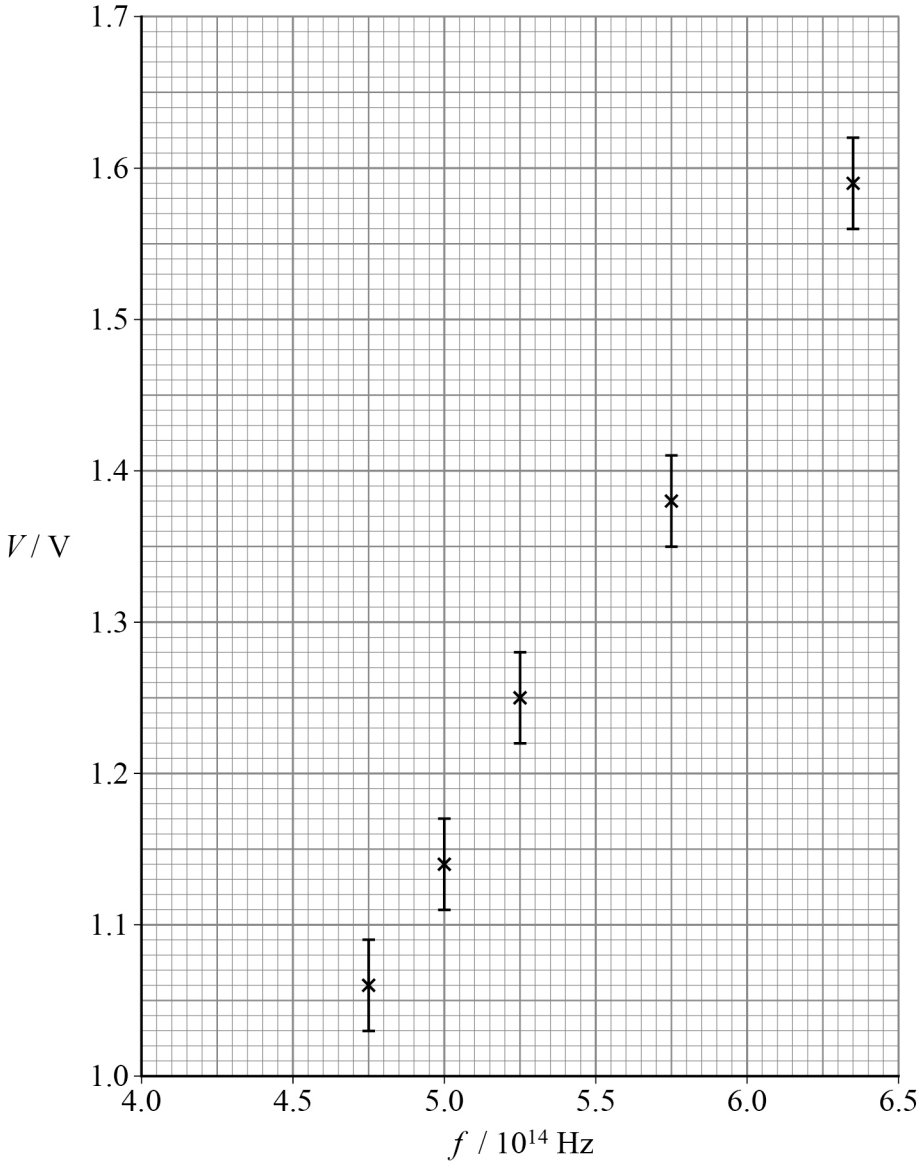

0 9 . 1 The student uses the absolute uncertainty in the measurements of V to plot the vertical error bars.

Determine the absolute uncertainty in the measurements of V.

[1 mark]

absolute uncertainty = _____ V

0 9 . 2 Draw, on **Figure 14**, **two** best-fit lines to show the minimum and maximum gradients consistent with the data.

[1 mark]

Turn over ►

Do not write outside the box

0 9 . 3 It can be shown that

$$eV = hf - \phi$$

Determine the minimum value of h from this experiment.

[4 marks]

minimum value of h = _____ J s

0 9 . 4 Explain how the student can use her graph to work out the percentage uncertainty in her value of h.
The uncertainty in e is negligible.

[2 marks]

_____

_____

_____

_____

_____

_____

8

Do not write outside the box

1 0 Wheels are attached to a car by a suspension system of springs and dampers as shown in **Figure 15**.

Figure 15

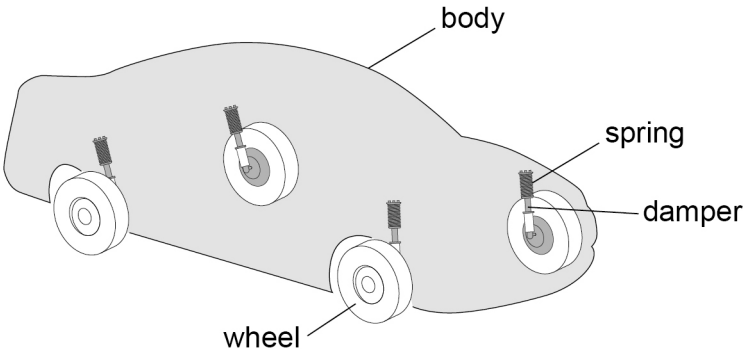

Figure 16 shows a simple model of a car.
Springs connect the wheels to the car. A damper is positioned inside each spring.

Figure 16

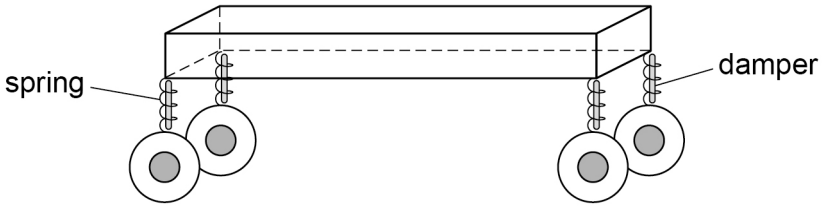

In this model:

- the parts of the car above the springs have a total mass m_A
- the wheels have a total mass m_B
- the springs and the dampers have negligible mass.

Engineers choose springs that compress by 30% when the car is stationary.

1 0 . 1 Explain why only m_A is considered when choosing a spring of suitable stiffness.

[1 mark]

Question 10 continues on the next page

Do not write outside the box

In the model, m_A is $1900\ \text{kg}$ and is supported evenly by four identical springs. Each spring has a stiffness of $6.1 \times 10^4\ \text{N m}^{-1}$ and compresses by 30% of its unloaded length.

1 0 . 2 Calculate the unloaded length of one spring.

[3 marks]

unloaded length = _____ m

1 0 . 3 One wheel and its spring is a mass–spring system.
The mass of the wheel is $30\ \text{kg}$.

Calculate the natural frequency of this system.

[2 marks]

natural frequency = _____ Hz

Do not write outside the box

1 0 . 4 Suggest the role of dampers in the suspension system of a real car.

[2 marks]

_____

_____

_____

_____

_____

_____

8

END OF SECTION B

Do not write outside the box

Section C

Each of the questions in this section is followed by four responses, **A**, **B**, **C** and **D**.

For each question select the best response.

Only **one** answer per question is allowed.
For each question, completely fill in the circle alongside the appropriate answer.

CORRECT METHOD ⬬ WRONG METHODS

If you want to change your answer you must cross out your original answer as shown.

If you wish to return to an answer previously crossed out, ring the answer you now wish to select as shown.

You may do your working in the blank space around each question but this will not be marked. Do **not** use additional pages for this working.

1 1 What is the unit of resistivity in SI fundamental (base) units?

[1 mark]

A $A^{-2}\,kg\,m\,s^{-3}$

B $A^{-2}\,kg\,m^{2}\,s^{-3}$

C $A^{-2}\,kg\,m^{3}\,s^{-3}$

D $A^{2}\,kg\,m^{3}\,s^{-3}$

Do not write outside the box

1 2 Each edge of a cube of conducting material has length x.

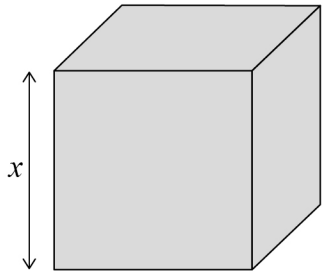

The resistance between any two opposite faces of the cube is R.
The same material is then reshaped into a uniform cylinder of length $4x$.

What is the resistance between the two opposite faces of this cylinder?

[1 mark]

A R ⬭

B $4R$ ⬭

C $8R$ ⬭

D $16R$ ⬭

1 3 An electric current transfers energy at a constant rate of $54\ \mathrm{J\ s^{-1}}$ in an $18\ \Omega$ resistor.

How many electrons pass a point in the resistor in 4.0 minutes?

[1 mark]

A 4.3×10^{19} ⬭

B 6.5×10^{20} ⬭

C 2.6×10^{21} ⬭

D 4.5×10^{21} ⬭

Do not write outside the box

1 4 Light of wavelength $600\ \text{nm}$ and light of an unknown wavelength λ are both incident normally on a diffraction grating.

The angle of the fourth-order maximum for the light of wavelength $600\ \text{nm}$ equals the angle of the fifth-order maximum for the light of wavelength λ.

What is λ?

[1 mark]

A $450\ \text{nm}$ ⬭

B $480\ \text{nm}$ ⬭

C $680\ \text{nm}$ ⬭

D $750\ \text{nm}$ ⬭

1 5 A beam of monochromatic light travelling in air is incident on the surface of a block of glass. The light is incident on the glass at a non-zero angle to the normal.

Which statement is true about the beam after it has been refracted?

[1 mark]

A The direction changes away from the normal. ⬭

B The frequency of the light does not change. ⬭

C The light travels faster in the glass. ⬭

D The wavelength of the light increases in the glass. ⬭

Do not write outside the box

1 6 A circuit contains a battery with an emf of $12\ \mathrm{V}$ and negligible internal resistance.

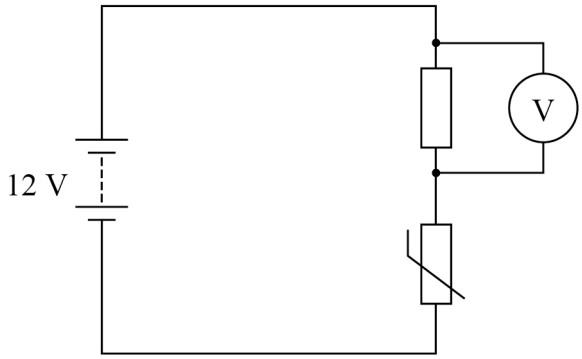

At temperature T_1, the thermistor has a resistance of $180\ \Omega$ and the voltmeter reading is $3.0\ \mathrm{V}$.

The temperature of the thermistor is changed to T_2.
The voltmeter reading is now $8.0\ \mathrm{V}$.

What is the resistance of the thermistor at T_2?

[1 mark]

A $23\ \Omega$ ⬭

B $30\ \Omega$ ⬭

C $90\ \Omega$ ⬭

D $120\ \Omega$ ⬭

Turn over for the next question

Do not write outside the box

1 7 Which combination of the refractive index of the core and the refractive index of the cladding causes the smallest modal dispersion in an optical fibre?

[1 mark]

	Refractive index of core	Refractive index of cladding	
A	1.2	1.4	⬭
B	1.4	1.2	⬭
C	2.2	2.4	⬭
D	2.4	2.2	⬭

Do not write outside the box

1 8 The diagram shows an X-ray tube.

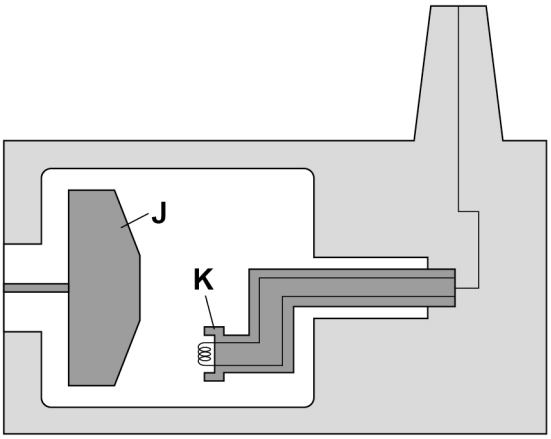

Which row identifies the anode, the cathode and the target?

[1 mark]

	Anode	Cathode	Target	
A	J	K	J	⬭
B	K	J	J	⬭
C	J	K	K	⬭
D	K	J	K	⬭

Turn over for the next question

Do not write outside the box

1 9 A nucleus of hydrogen $^{2}_{1}\mathrm{H}$ is moving at a constant speed.

The de Broglie wavelength of the nucleus is 2.2×10^{-10} m.

What is an estimate of the kinetic energy of the nucleus?

[1 mark]

A 7.5×10^{-25} J ⬭

B 1.5×10^{-24} J ⬭

C 1.4×10^{-21} J ⬭

D 2.7×10^{-21} J ⬭

2 0 A current of 2.0 A in a fixed resistor produces a power of 32 W.

What is the potential difference across the same resistor when a power of 64 W is being produced?

[1 mark]

A 16 V ⬭

B 23 V ⬭

C 32 V ⬭

D 512 V ⬭

Do not write outside the box

2 1 Which circuit shows an LDR arranged so that the voltmeter reading decreases as the light intensity increases?

[1 mark]

A

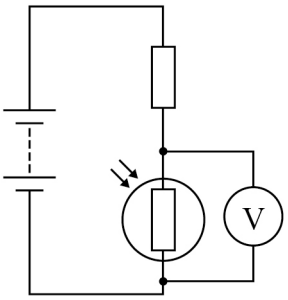

B

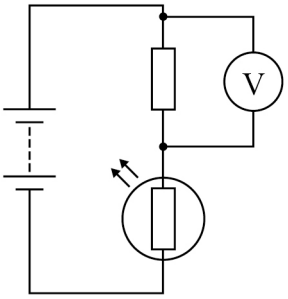

C

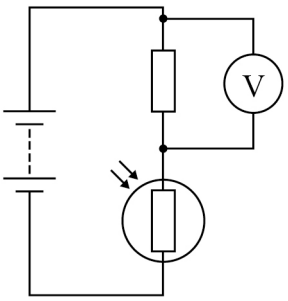

D

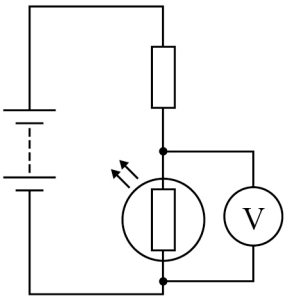

Turn over for the next question

Do not write outside the box

2 2 A triangular prism made of substance **X** is joined to blocks made of substances **Y** and **Z**.

The diagram shows the path of a ray of light.

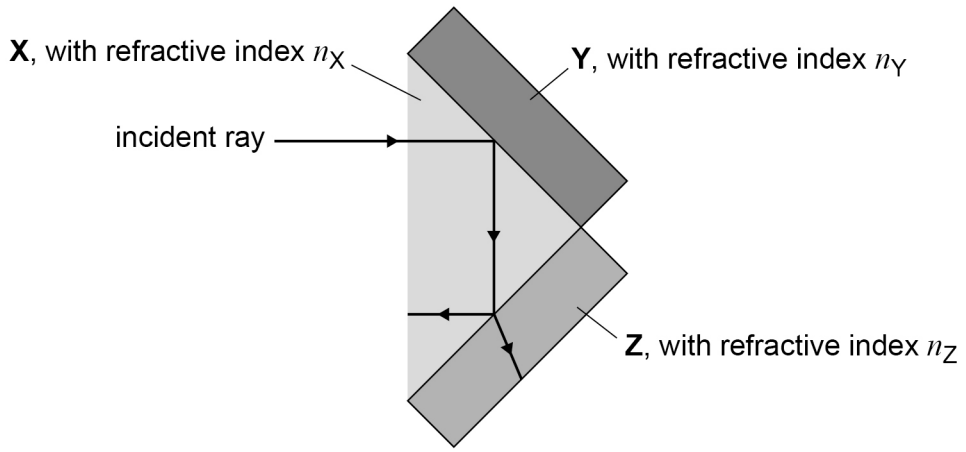

Total internal reflection occurs at the **XY** boundary.

Which row is correct?

[1 mark]

A	$n_X > n_Y$	$n_Y > n_Z$	⬭
B	$n_X > n_Y$	$n_Y < n_Z$	⬭
C	$n_X < n_Y$	$n_Y < n_Z$	⬭
D	$n_X < n_Y$	$n_Y > n_Z$	⬭

2 3 Which is **not** a necessary assumption in deriving the diffraction grating equation $n\lambda = d\sin\theta$?

[1 mark]

A Maxima are produced by path differences of integer wavelengths. ⬭

B Diffraction occurs at the grating slits. ⬭

C The grating slits are separated by a constant distance. ⬭

D The light from the grating must be polarised. ⬭

Do not write outside the box

2 4 Two loudspeakers $\mathbf{L_1}$ and $\mathbf{L_2}$ emit coherent sound of wavelength $1.0\ \mathrm{m}$.
Initially, $\mathbf{L_1}$ and $\mathbf{L_2}$ are in the same position.

A microphone **M** at a distance of $10\ \mathrm{m}$ from the speakers detects no sound.

$\mathbf{L_2}$ is moved away from $\mathbf{L_1}$ along a line perpendicular to the line $\mathbf{L_1M}$.

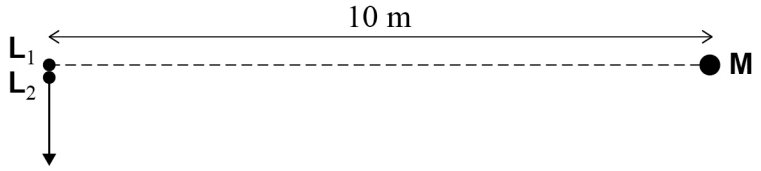

What is the smallest distance between $\mathbf{L_1}$ and $\mathbf{L_2}$ that leads to a maximum signal at **M**?

[1 mark]

A $0.5\ \mathrm{m}$

B $1.0\ \mathrm{m}$

C $1.6\ \mathrm{m}$

D $3.2\ \mathrm{m}$

14

END OF QUESTIONS

Do not write outside the box

There are no questions printed on this page

DO NOT WRITE ON THIS PAGE
ANSWER IN THE SPACES PROVIDED

Do not write outside the box

Question number	**Additional page, if required.** **Write the question numbers in the left-hand margin.**

Do not write outside the box

Question number	**Additional page, if required.** **Write the question numbers in the left-hand margin.**

Copyright information

For confidentiality purposes, all acknowledgements of third-party copyright material are published in a separate booklet. This booklet is published after each live examination series and is available for free download from www.oxfordaqa.com

Permission to reproduce all copyright material has been applied for. In some cases, efforts to contact copyright-holders may have been unsuccessful and OxfordAQA will be happy to rectify any omissions of acknowledgements. If you have any queries please contact the Copyright Team.

Copyright © 2024 OxfordAQA International Examinations and its licensors. All rights reserved.