OXFORD

INTERNATIONAL
AQA EXAMINATIONS

Please write clearly in block capitals.

Centre number | | | | | | Candidate number | | | | |

Surname _____

Forename(s) _____

Candidate signature _____
I declare this is my own work.

INTERNATIONAL AS
PHYSICS

Unit 2 Electricity, waves and particles

Monday 10 January 2022 07:00 GMT Time allowed: 2 hours

Materials
For this paper you must have:
- a Data and Formulae Booklet as a loose insert
- a ruler with millimetre measurements
- a scientific calculator, which you are expected to use where appropriate
- a protractor.

Instructions
- Use black ink or black ball-point pen.
- Fill in the boxes at the top of this page.
- Answer **all** questions.
- You must answer the questions in the spaces provided. Do not write outside the box around each page or on blank pages.
- All working must be shown.
- If you need extra space for your answer(s), use the lined pages at the end of this book. Write the question number against your answer(s).
- Do all rough work in this book. Cross through any work you do not want to be marked.

Information
- The marks for questions are shown in brackets.
- The maximum mark for this paper is 80.

For Examiner's Use	
Question	Mark
1	
2	
3	
4	
5	
6	
7	
8	
9	
10	
11	
12	
13–26	
TOTAL	

Do not write outside the box

Section A

Answer **all** questions in this section.

0 1 Lightning strikes can happen when there is a large potential difference between a cloud and the ground.

The energy transferred during one lightning strike is 1.6×10^9 J.
A charge of 23.7 C moves between the cloud and the ground in a time t.
The magnitude of the current is 3.09×10^4 A.

Assume that the potential difference between the cloud and the ground is constant.

0 1 . 1 Calculate t.

[1 mark]

t = _____ s

0 1 . 2 Calculate the potential difference between the cloud and the ground.

[1 mark]

potential difference = _____ V

0 1 . 3 A power station has an electrical output of 1300 MW.

Calculate the time taken for the power station to transfer 1.6×10^9 J.

[1 mark]

time taken = _____ s

3

Do not write outside the box

0 2 A diffraction grating of width 42 mm has 12 000 lines.
Monochromatic light is incident normally on the grating.
The angle between the two second-order diffraction maxima is 41.4°.

Calculate the wavelength of the incident light.

[4 marks]

wavelength = _____ m

4

Turn over for the next question

Do not write outside the box

0 3 Light from the filament lamps in a car's headlights is incident on a white wall. The two beams overlap on the white wall as shown in **Figure 1**.

Figure 1

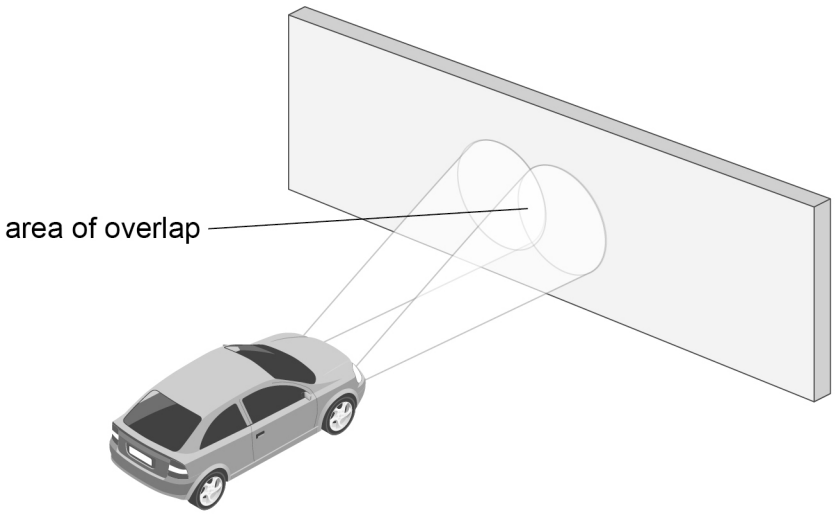

Explain why no interference pattern is observable to the naked eye in the area of overlap.

[3 marks]

3

Do not write outside the box

0 4 State and explain **one** piece of evidence that shows that energy levels in atoms are discrete.

[3 marks]

3

Turn over for the next question

Do not write outside the box

0 5 . 1 Show that an X-ray of frequency 7.60×10^{17} Hz has a wavelength of approximately 4.0×10^{-10} m.

[1 mark]

0 5 . 2 Show that an electron travelling at a speed of 4.10×10^{6} m s^{-1} has a de Broglie wavelength of approximately 1.8×10^{-10} m.

[1 mark]

0 5 . 3 A student is investigating the atomic spacing in graphite. The atomic spacing is approximately 0.15 nm.

The two possible methods are:

- using the diffraction of the X-rays in Question **05.1**
- using the diffraction of the electrons in Question **05.2**.

State and explain which is the better method.

[2 marks]

_____

_____

_____

_____

_____

4

Do not write outside the box

0 6 . 1 An electric current is passed through a fluorescent tube.

Electrons and ions collide with mercury gas in the fluorescent tube, raising the mercury atoms to higher energy levels.

Describe how a fluorescent tube produces visible light.

[3 marks]

0 6 . 2 The resistance of the tube decreases when the potential difference across it is increased.

Suggest how this happens.

[2 marks]

5

Do not write outside the box

0 7 A wave travels along a stretched string and is reflected from a fixed end. The incident wave and the reflected wave interact to produce a stationary wave on the string.

Figure 2 shows part of the string, with the incident wave and the reflected wave at time $t = 0$
P is a point on the string.

The incident wave is shown as and the reflected wave is shown as

Figure 2

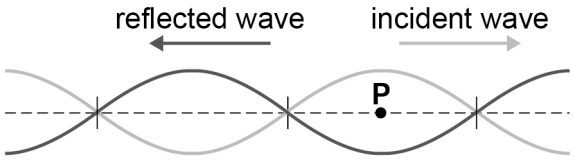

The periodic time for one oscillation of the waves is T.
The amplitude of both the incident wave and the reflected wave is A.

0 7 . 1 State the displacement of the stationary wave at **P** at time $t = 0$

[1 mark]

displacement = _____

Figure 3 shows the **incident** wave at time $t = \frac{T}{4}$.

Figure 3

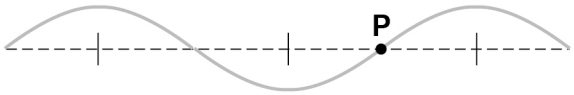

0 7 . 2 Draw on **Figure 4** the **reflected** wave at time $t = \frac{T}{4}$.

[1 mark]

Figure 4

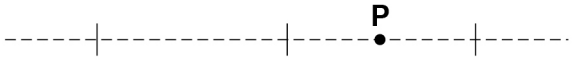

Do not write outside the box

0 7 . 3 Describe and explain the appearance of the stationary wave at time $t = \frac{T}{4}$.

[4 marks]

6

Turn over for the next question

Do not write outside the box

0 8 **Figure 5** shows the variation of resistance R_T with temperature for a thermistor. **Figure 6** shows the variation of resistance R_L with light level for an LDR. **Figure 6** is plotted on logarithmic–linear axes.

Figure 5

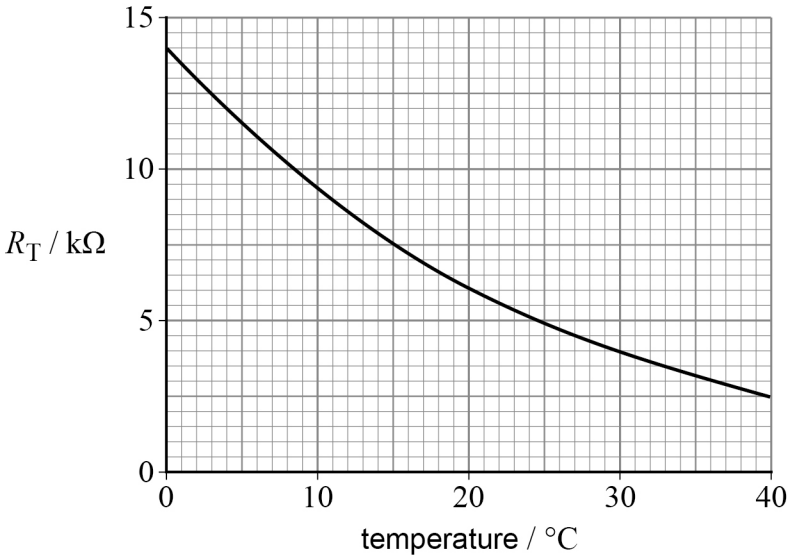

Figure 6

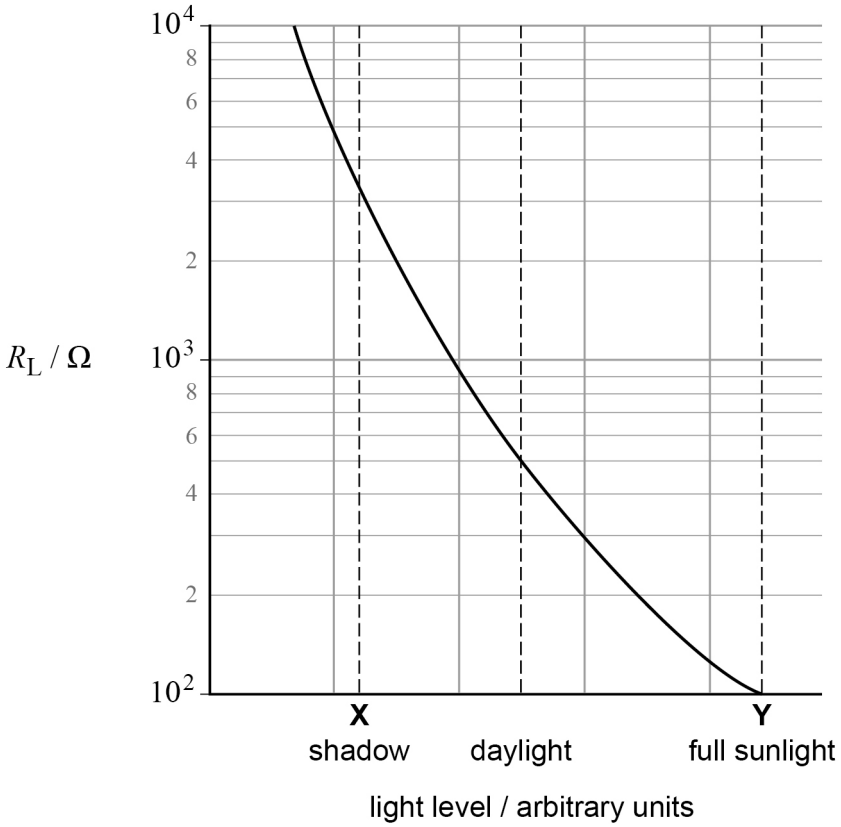

Do not write outside the box

Figure 7 shows a circuit containing the LDR, the thermistor and a 6.0 V battery that has negligible internal resistance.

Figure 7

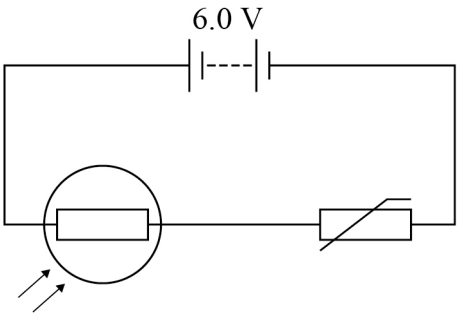

0 8 . 1 The circuit is placed in shadow where the light level is **X** as shown in **Figure 6**.
The temperature of the thermistor is 15 °C.

Determine the current in the circuit.

[4 marks]

current = _____ A

0 8 . 2 The circuit is now placed in full sunlight where the light level is **Y** as shown in **Figure 6**.
The temperature changes so that the resistance of the thermistor is 5.5 kΩ.

Determine the potential difference across the thermistor.

[3 marks]

potential difference = _____ V

7

Turn over ►

Do not write outside the box

0 9 **Figure 8** shows a simple pendulum suspended from a ceiling that is too high to reach.

The height of the ceiling is H.
The centre of mass of the pendulum bob is a distance h from the floor when the pendulum is in the rest position.

Figure 8

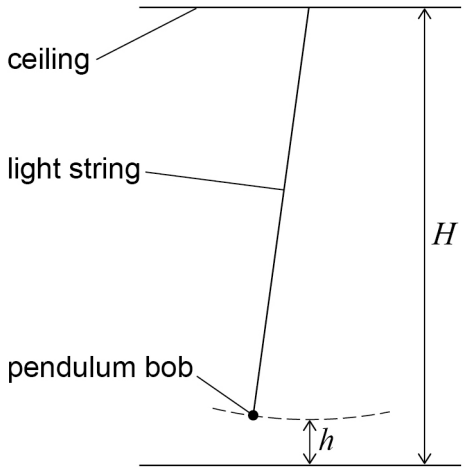

A student uses the pendulum to determine H.
The relationship between h and the period T of the pendulum is:

$$T = 2\pi\sqrt{\frac{H-h}{g}}$$

The student wants to use a graphical method to determine both H and g.

0 9 . 1 Describe the procedure that the student should use to collect data that produce accurate determinations of H and g.

[3 marks]

Do not write outside the box

0 9 . 2 Describe how the data can be analysed using a straight-line graph to determine H and g.

[3 marks]

6

Turn over for the next question

Do not write outside the box

1 0 Earthquakes produce seismic waves that travel through the ground and make it vibrate.

Figure 9 shows a seismograph $\mathbf{S_1}$ that is used to record these vibrations.

A heavy mass **M** is attached to a rigid case by a frictionless hinge.

M is supported by a spring that has a low stiffness.

The case is bolted to the ground.

Figure 9

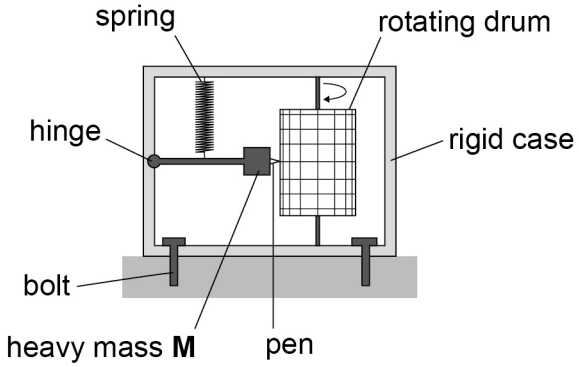

During an earthquake the ground surface moves up and down but the centre of mass of **M** stays almost stationary.

Figure 10 shows $\mathbf{S_1}$ bolted to the ground before the earthquake, with **M** at its equilibrium position.

Figures 11 and **12** show $\mathbf{S_1}$ during the earthquake.

In **Figure 11** the ground has moved down but **M** has stayed in its initial position.

In **Figure 12** the ground has moved up and **M** remains in its initial position.

Figure 10 **Figure 11** **Figure 12**

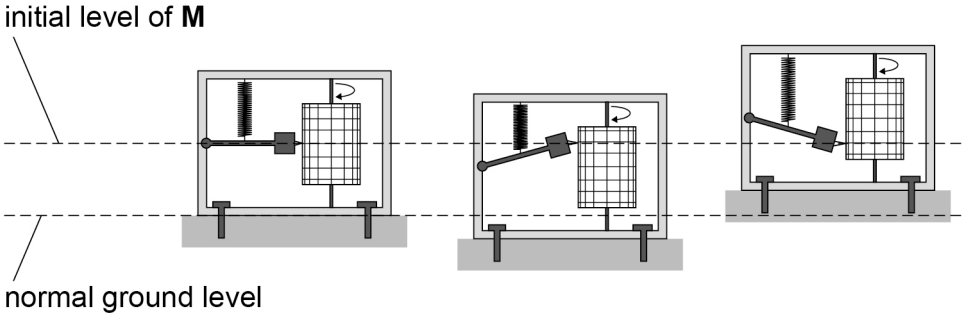

The pen records the movement of the seismograph on graph paper attached to a rotating drum.

Do not write outside the box

1 0 . 1 Explain why **M** stays almost stationary as a seismic wave passes $\mathbf{S_1}$.

[1 mark]

_____

_____

Figure 13 shows a magnified image of a trace from $\mathbf{S_1}$.
At time $t = 0$ the pen is at position **P**.

Figure 13

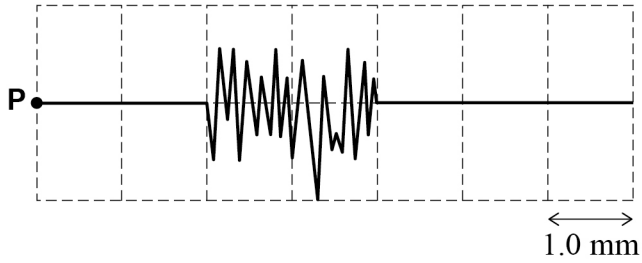

The drum has a circumference of $500\ \text{mm}$ and a period of rotation of $1000\ \text{s}$.
Each square on the graph paper is $1.0\ \text{mm}$ wide.

1 0 . 2 Estimate the frequency of the seismic waves recorded by $\mathbf{S_1}$.

[3 marks]

frequency = _____ Hz

Question 10 continues on the next page

Do not write outside the box

Figure 14 shows a magnified image of the trace from an identical seismograph $\mathbf{S_2}$.

Figure 14

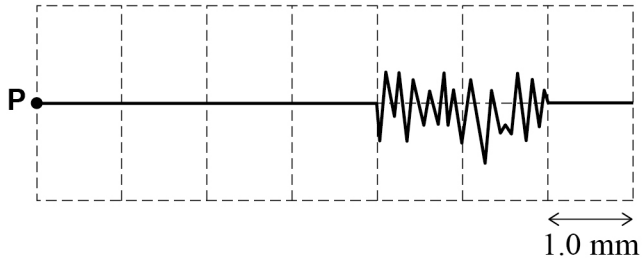

At time $t = 0$ the pen is at position **P**.

$\mathbf{S_2}$ is further from the origin of the earthquake than $\mathbf{S_1}$.
The distance between $\mathbf{S_1}$ and $\mathbf{S_2}$ is d.

1 0 . 3 The speed of the seismic waves is $7.0\ \text{km s}^{-1}$.

Deduce d.

[3 marks]

$d =$ _____ m

Do not write outside the box

1 0 . 4 The time at which the trace starts is different in **Figure 14** compared with **Figure 13**.

Explain **one** other way in which **Figure 14** demonstrates that $\mathbf{S_2}$ is further than $\mathbf{S_1}$ from the origin of the earthquake.

[2 marks]

_____

_____

_____

_____

_____

9

END OF SECTION A

Turn over ►

Do not write outside the box

Section B

Answer **all** questions in this section.

1 1 Two students do an experiment to determine the resistance per unit length of a metal wire.
Student **A** uses a metre ruler to make a single measurement of the length of the wire.
She records a value of $625\ \text{mm}$.
She measures the resistance of the wire as $5.3 \pm 0.3\ \Omega$.

1 1 . 1 Show that the percentage uncertainty in the length of the wire is approximately 0.2%.

[1 mark]

1 1 . 2 Determine, in $\Omega\ \text{m}^{-1}$, the student's value for resistance per unit length and the absolute uncertainty in her calculated value.

[3 marks]

resistance per unit length = _____ $\Omega\ \text{m}^{-1}$

absolute uncertainty = _____ $\Omega\ \text{m}^{-1}$

Do not write outside the box

Student **B** determines values of resistance R for a range of lengths l for the wire and uses them to plot a graph.
Figure 15 shows the graph of R against l.

Figure 15

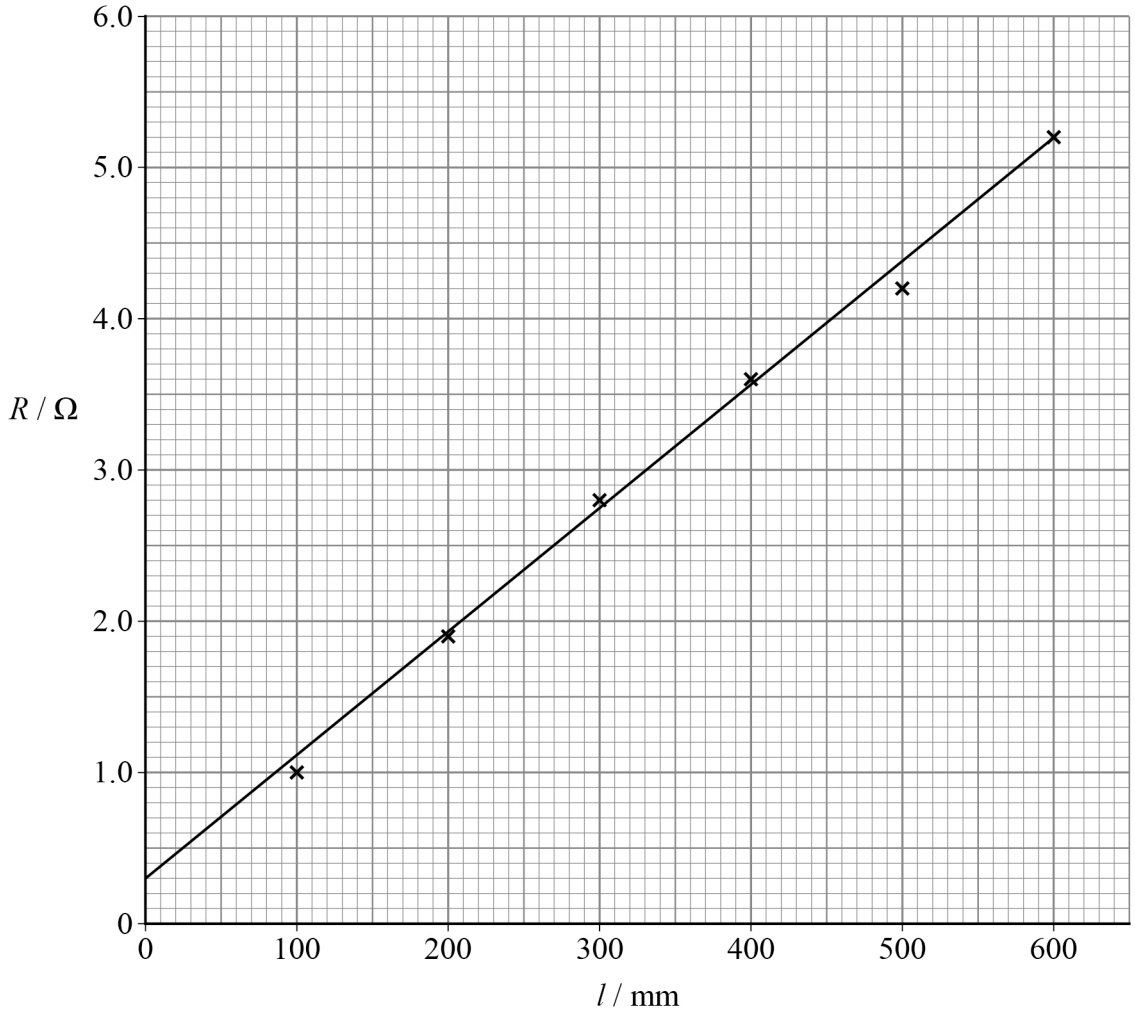

1 1 . 3 Determine, using the gradient of the graph, the resistance per unit length of the wire in $\Omega\ m^{-1}$.

[2 marks]

resistance per unit length = _____ $\Omega\ m^{-1}$

Question 11 continues on the next page

Do not write outside the box

1 1 . 4 The method used by student **B** is better than the method used by student **A**.

Suggest **two** reasons why.

[2 marks]

1 _____

_____

_____

2 _____

_____

_____

8

Do not write outside the box

1 2 A heating element in an electric heater consists of a coil of wire.
The heating element transfers a power of $1.00\ \text{kW}$ when connected directly to a mains supply of $230\ \text{V}$.

1 2 . 1 Show that the resistance of the element is approximately $53\ \Omega$.

[2 marks]

1 2 . 2 The element is made from wire that has a radius of $0.137\ \text{mm}$ and a resistivity of $4.9 \times 10^{-7}\ \Omega\ \text{m}$.

Calculate the length of wire needed for the element.

[2 marks]

length of wire = _____ m

Question 12 continues on the next page

Do not write outside the box

1 2 . 3 The electric heater contains two elements, each of resistance 53 Ω.
There is also a 230 V lamp to show when the heater is working.
The power transferred by the lamp is negligible.
The resistivity of the wire does not vary with temperature.

Figure 16 shows the circuit symbols for an ac (mains) supply and an element.

Figure 16

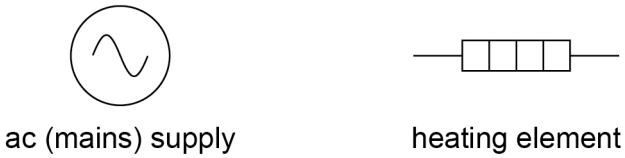

Draw circuit diagrams to show how the components can be connected to transfer:

- the **maximum** possible power using both elements
- the **minimum** possible power using both elements.

State, for **each** circuit, the total power transferred by the heater.

[4 marks]

maximum

total power transferred = _____ W

minimum

total power transferred = _____ W

8

END OF SECTION B

Do not write outside the box

Section C

Each of the questions in this section is followed by four responses, **A**, **B**, **C** and **D**.

For each question select the best response.

Only **one** answer per question is allowed.
For each question, completely fill in the circle alongside the appropriate answer.

CORRECT METHOD ● WRONG METHODS

If you want to change your answer you must cross out your original answer as shown.

If you wish to return to an answer previously crossed out, ring the answer you now wish to select as shown.

You may do your working in the blank space around each question but this will not be marked.
Do **not** use additional pages for this working.

1 3 The frequency of the second harmonic of a stationary wave on a string is 240 Hz.
The string is fixed at both ends. The tension and length of the string are kept constant.

What is the frequency of the fifth harmonic of the stationary wave?

[1 mark]

A 96 Hz

B 480 Hz

C 600 Hz

D 1200 Hz

Turn over for the next question

Do not write outside the box

1 4 Each diagram shows a battery connected to an external resistor.
Each battery has an emf of $10\ \mathrm{V}$.
The resistance of each external resistor and the internal resistance of each battery are shown.

Which circuit transfers the **least** power to the external resistor?

[1 mark]

A

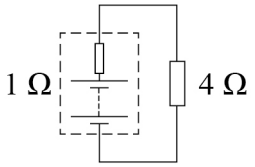

B

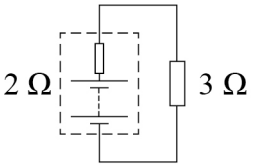

C

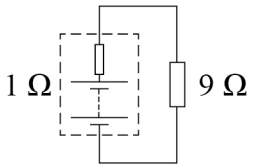

D

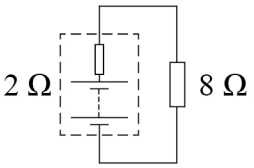

A ⬭

B ⬭

C ⬭

D ⬭

Do not write outside the box

1 5 The diagrams show a battery connected to networks of ideal diodes and resistors.

In which circuit will a charge flow in the battery?

[1 mark]

A

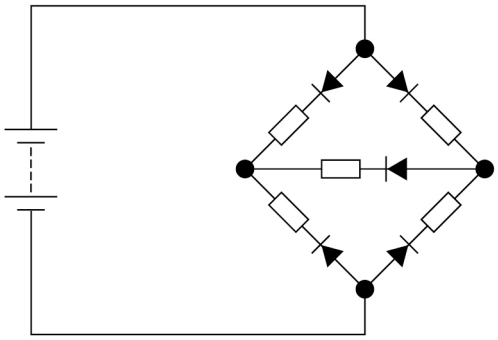

B

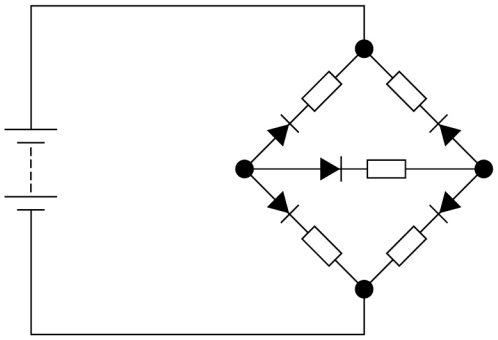

C

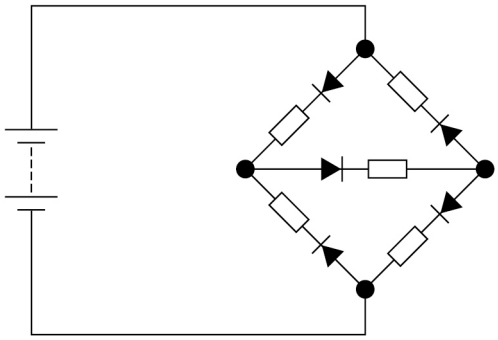

D

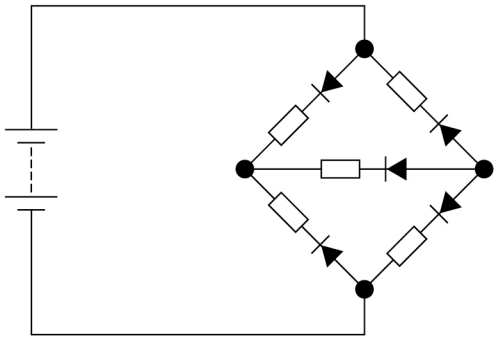

A ⬭

B ⬭

C ⬭

D ⬭

Turn over ►

Do not write outside the box

1 6 A student uses multimeters to measure the potential difference and the current in a circuit. The battery has an emf of 6.0 V and negligible internal resistance.

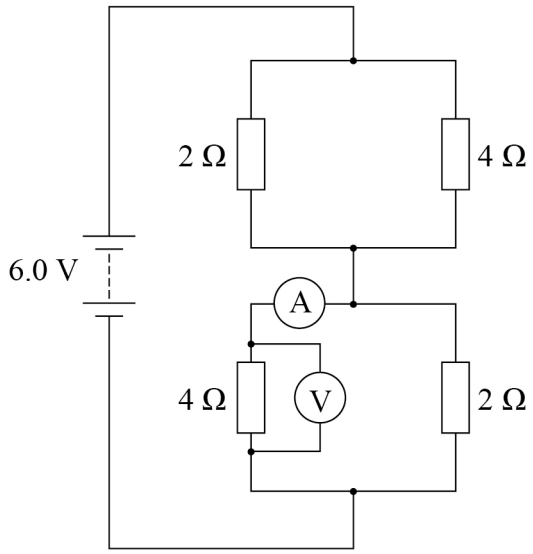

Which multimeter ranges are most appropriate?

[1 mark]

	Range for voltmeter / V	Range for ammeter / A	
A	0–5	0–1	⬭
B	0–5	0–5	⬭
C	0–10	0–1	⬭
D	0–10	0–5	⬭

Do not write outside the box

1 7 A body undergoes simple harmonic motion. The period of the motion is T.

Which graph shows the variation of total energy E with time t?

[1 mark]

A

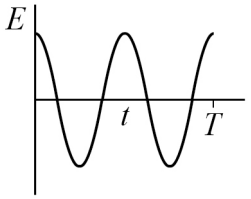

B

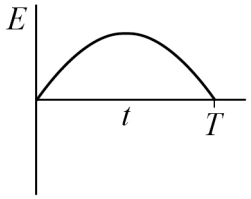

C

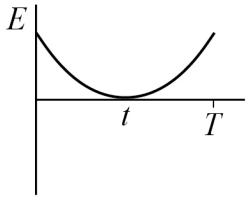

D

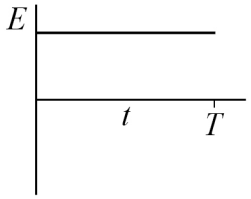

A ⬭

B ⬭

C ⬭

D ⬭

Turn over for the next question

Do not write outside the box

Questions **18** and **19** refer to two loudspeakers $\mathbf{S_1}$ and $\mathbf{S_2}$ separated by a distance of 6.00 m.

1 8 Point **P** is 3.50 m from $\mathbf{S_1}$ and 3.75 m from $\mathbf{S_2}$.

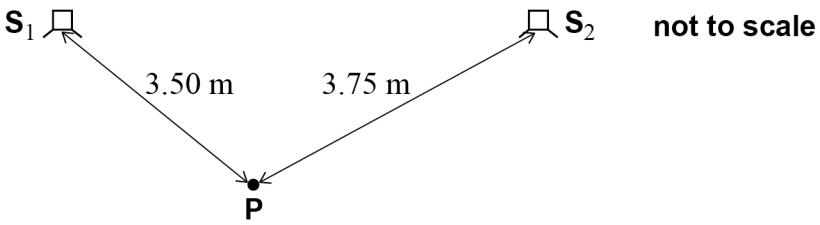

The speed of sound in air is $330\ \mathrm{m\ s^{-1}}$.

The loudspeakers are in phase and emit sound of frequency 660 Hz.

The phase difference between the waves arriving at **P** from $\mathbf{S_1}$ and $\mathbf{S_2}$ is:

[1 mark]

A zero ⬭

B $\frac{\pi}{4}$ ⬭

C $\frac{\pi}{2}$ ⬭

D π ⬭

Do not write outside the box

1 9 A path is parallel to the line joining $\mathbf{S_1}$ and $\mathbf{S_2}$ and is $40.0\ \mathrm{m}$ from that line.

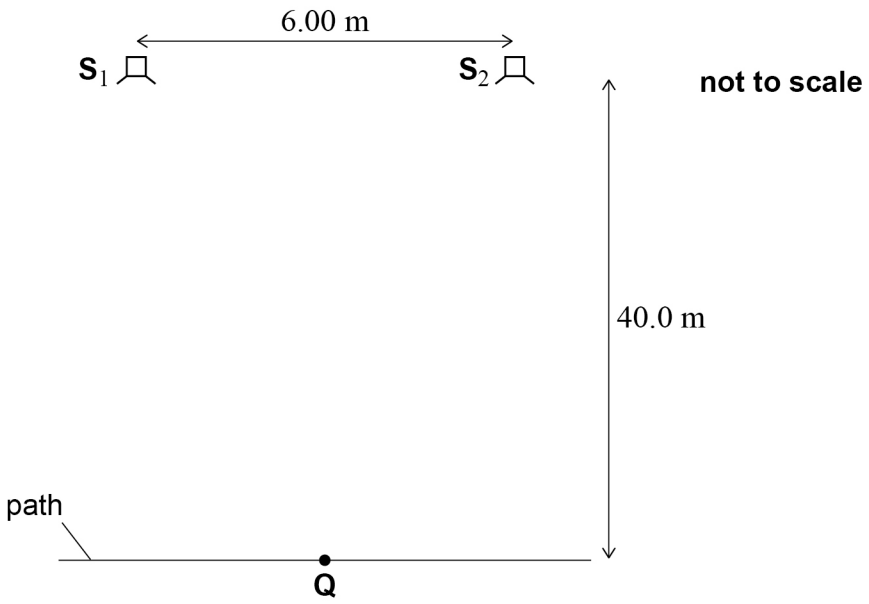

The sound from both loudspeakers now has a wavelength of $0.70\ \mathrm{m}$.
$\mathbf{S_1}$ and $\mathbf{S_2}$ now emit waves that are $\pi\ \mathrm{rad}$ out of phase.

The shortest distance along the path between a position with constructive interference and a position with destructive interference is x.

Point **Q** is equidistant from $\mathbf{S_1}$ and $\mathbf{S_2}$.

Which row gives x and the amplitude of the sound that is detected at **Q**?

[1 mark]

	x / m	Amplitude at Q	
A	2.3	maximum	⬭
B	2.3	minimum	⬭
C	4.7	maximum	⬭
D	4.7	minimum	⬭

Do not write outside the box

2 0 Damping is applied to an oscillating body at time $t = 0$

Which graph shows the variation of displacement x of the oscillating body with t?

[1 mark]

A

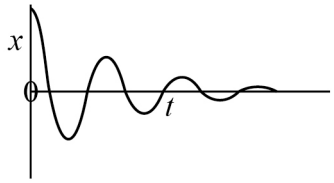

B

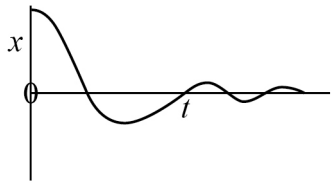

C

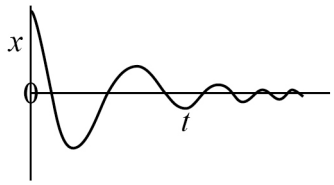

D

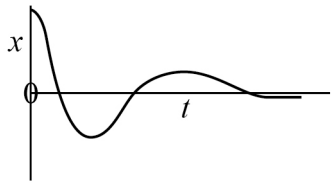

Do not write outside the box

2 1 Monochromatic light passes through a right-angled prism. The critical angle for the glass from which the prism is made is 45°.

Which light path is possible?

[1 mark]

A

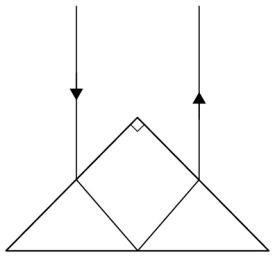

B

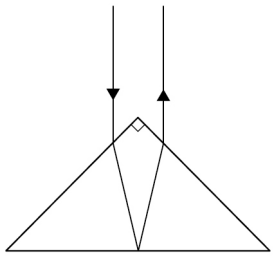

C

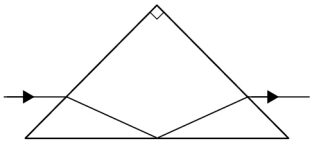

D

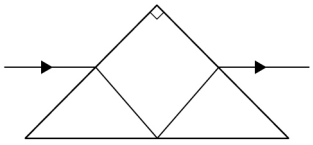

A ⬭

B ⬭

C ⬭

D ⬭

2 2 Which statement about dispersion in optical fibres is **not** correct?

[1 mark]

A Modal dispersion is caused by light entering the fibre at different angles. ⬭

B Material dispersion is minimised by using a narrow fibre. ⬭

C Both material and modal dispersions cause pulse broadening. ⬭

D Pulse broadening can be reduced by cladding the fibre. ⬭

Do not write outside the box

2 3 Crystal structures are often investigated using electron diffraction.
A student suggests that positron diffraction could be used instead of electron diffraction.

A positron is a positively charged particle that has the same mass and magnitude of charge as an electron.

Which statement is correct?

[1 mark]

A Electrons have a greater de Broglie wavelength than positrons that have the same energy. ⬭

B Electrons diffract through a larger angle than positrons that have the same momentum. ⬭

C Positrons are not diffracted by planes of atoms because of their positive charge. ⬭

D Positrons exhibit the same wave-like properties as electrons that have the same velocity. ⬭

Do not write outside the box

2 4 The diagram shows the spectrum for an X-ray tube.

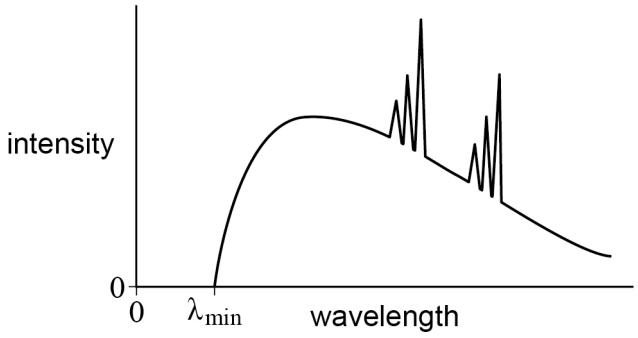

The minimum wavelength λ_{min} of X-rays emitted from the X-ray tube can be reduced by

[1 mark]

A reducing the potential difference across the tube. ⬭

B increasing the potential difference across the tube. ⬭

C reducing the beam current in the tube. ⬭

D increasing the beam current in the tube. ⬭

Turn over for the next question

Do not write outside the box

In Questions **25** and **26**, a metal surface is illuminated with radiation of frequency f and photoelectrons are produced.

2 5 The maximum kinetic energy $E_{k(max)}$ of the photoelectrons is measured for a range of values of f.
The work function of the metal used is 8.2×10^{-19} J.

Which graph shows the variation of $E_{k(max)}$ with f?

[1 mark]

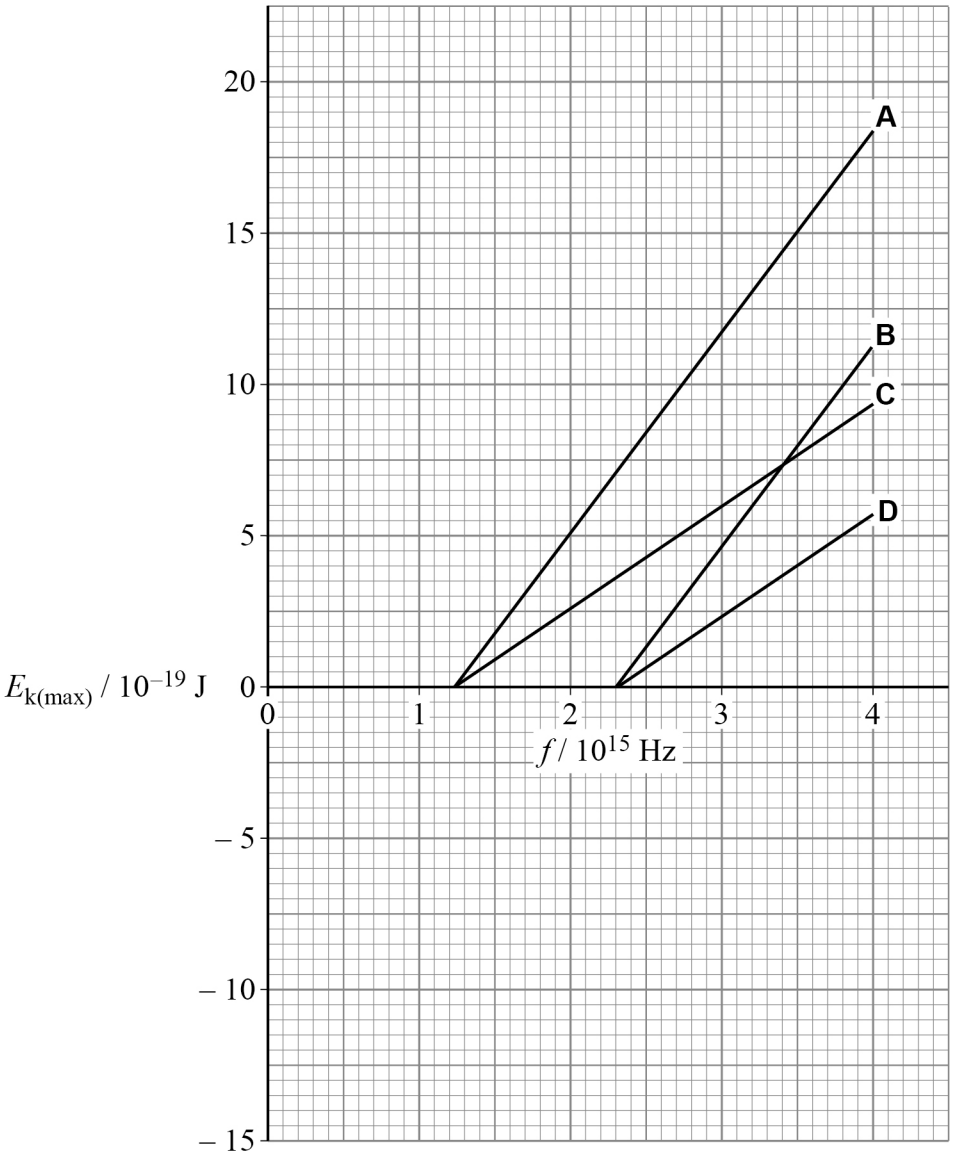

A ⬭

B ⬭

C ⬭

D ⬭

Do not write outside the box

2 6 Which **single** change will cause the stopping potential of the photoelectrons to increase?

[1 mark]

A increasing the number of photons per second that are incident on the surface

B increasing the wavelength of the incident radiation

C increasing the frequency of the incident radiation

D using a metal of greater work function

14

END OF QUESTIONS

Do not write outside the box

There are no questions printed on this page

DO NOT WRITE ON THIS PAGE
ANSWER IN THE SPACES PROVIDED

Do not write outside the box

Question number	**Additional page, if required.** **Write the question numbers in the left-hand margin.**

Do not write outside the box

Question number	**Additional page, if required.** **Write the question numbers in the left-hand margin.**

Do not write outside the box

Question number	**Additional page, if required.** **Write the question numbers in the left-hand margin.**

Do not write outside the box

There are no questions printed on this page

DO NOT WRITE ON THIS PAGE
ANSWER IN THE SPACES PROVIDED

Copyright information

For confidentiality purposes, all acknowledgements of third-party copyright material are published in a separate booklet. This booklet is published after each live examination series and is available for free download from www.oxfordaqaexams.org.uk.

Permission to reproduce all copyright material has been applied for. In some cases, efforts to contact copyright-holders may have been unsuccessful and Oxford International AQA Examinations will be happy to rectify any omissions of acknowledgements. If you have any queries please contact the Copyright Team.

Copyright © 2022 Oxford International AQA Examinations and its licensors. All rights reserved.