OXFORD

INTERNATIONAL AQA EXAMINATIONS

Please write clearly in block capitals.

Centre number | | | | | | Candidate number | | | | |

Surname _____

Forename(s) _____

Candidate signature _____

OXFORD AQA INTERNATIONAL AS

PHYSICS

Unit 2 Electricity, waves and particles

Thursday 25 January 2018 06:00 GMT Time allowed: 2 hours

A

Materials

For this paper you must have:
- a Data and Formulae Booklet as a loose insert
- a ruler with millimetre measurements
- a scientific calculator, which you are expected to use where appropriate.

Instructions
- Use black ink or black ball-point pen.
- Fill in the boxes at the top of this page.
- Answer **all** questions.
- You must answer the questions in the spaces provided. Do not write outside the box around each page or on blank pages.
- All working must be shown.
- Do all rough work in this book. Cross through any work you do not want to be marked.

Information
- The marks for questions are shown in brackets.
- The maximum mark for this paper is 80.

For Examiner's Use	
Question	Mark
1	
2	
3	
4	
5	
6	
7	
8	
9	
10–23	
TOTAL	

Do not write outside the box

Section A

Answer **all** questions in this section.

0 1 . 1 Outline what is meant by a superconductor.

[2 marks]

0 1 . 2 State **one** application of superconductors.

[1 mark]

3

0 2 X-rays and ultrasound are used in medical imaging.

0 2 . 1 State **one** advantage of using X-rays instead of ultrasound in medical imaging.

[1 mark]

0 2 . 2 Describe why ultrasound, rather than X-rays, is used to produce an image of a fetus.

[2 marks]

3

Do not write outside the box

0 3 A student uses a micrometer, that has no zero error, to measure the diameter of a copper wire.

Figure 1 shows the micrometer scales as the diameter is measured.

Figure 1

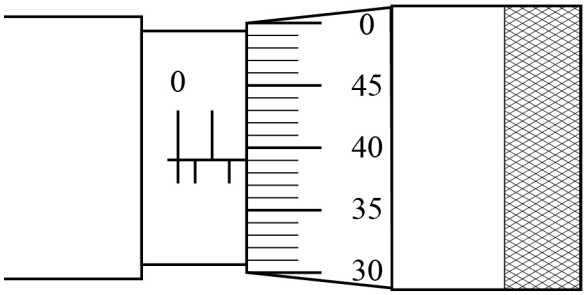

0 3 . 1 Show that the cross-sectional area of the wire is about $2.8 \times 10^{-6}\ \mathrm{m}^2$

[2 marks]

0 3 . 2 The resistivity of copper is $1.7 \times 10^{-8}\ \Omega\ \mathrm{m}$
The wire has a length of $85\ \mathrm{cm}$

Calculate the resistance of the wire.
Give your answer to an appropriate number of significant figures.

[3 marks]

resistance = _____ Ω

5

Turn over ►

Do not write outside the box

0 4 **Figure 2** shows three identical resistors, each with a resistance R, in a circuit connected to a cell with emf $1.5\ \text{V}$
The cell has negligible internal resistance.

Figure 2

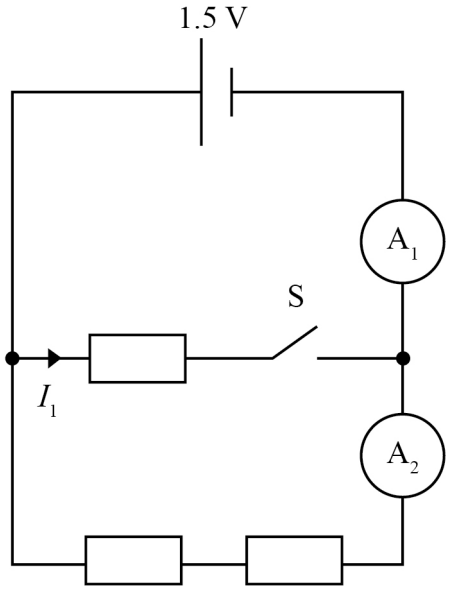

0 4 . 1 When switch S is closed the reading of ammeter A_1 is $1.2\ \text{A}$ and the reading of ammeter A_2 is $0.40\ \text{A}$

State the value of the current I_1 when switch S is closed.

[1 mark]

I_1 = _____ A

0 4 . 2 Calculate R.

[1 mark]

R = _____ Ω

Do not write outside the box

0 4 . 3 Switch S is returned to the open position.

State and explain the effect this has on the readings of A_1 and A_2.

[3 marks]

5

Turn over for the next question

Do not write outside the box

0 5 **Figure 3** shows some of the energy levels for a hydrogen atom.

Figure 3

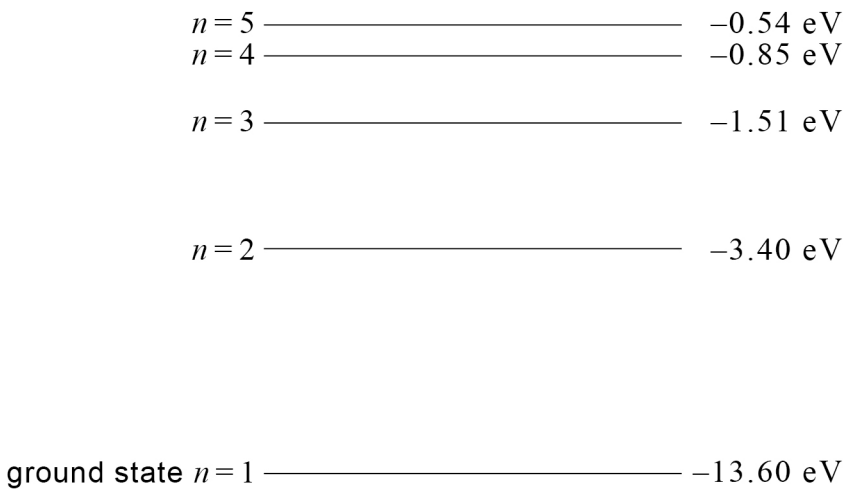

0 5 . 1 A hydrogen atom is in the ground state. It absorbs all the energy of a photon and becomes excited to the $n = 3$ energy level.

Calculate the frequency of the photon absorbed by the hydrogen atom.

[3 marks]

frequency = _____ Hz

0 5 . 2 State, in eV, the ionisation energy of a hydrogen atom.

[1 mark]

ionisation energy = _____ eV

Do not write outside the box

0 5 . 3 A photon with an energy of $18.4\ \mathrm{eV}$ interacts with a hydrogen atom in its ground state.

Describe how the principle of energy conservation could apply in this situation.

[3 marks]

_____

_____

_____

_____

_____

_____

_____

_____

_____

7

Turn over for the next question

Do not write outside the box

0 6 . 1 Describe the nature of an electromagnetic wave.

[3 marks]

Do not write outside the box

0 6 . 2 A source of microwaves and a detector are set up with two metal grilles **A** and **B** between them, as shown in **Figure 4**. The reading on a voltmeter connected to the detector is $5\ \mathrm{mV}$. Each grille consists of a series of parallel, thin, metal rods.

Figure 4

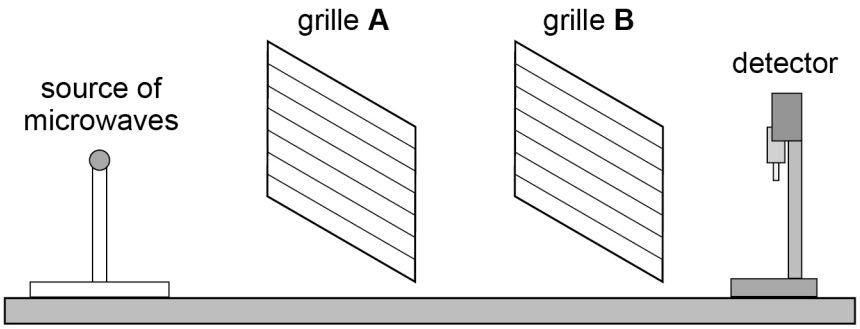

Grille **A** is rotated through $90°$ about a horizontal axis as shown in **Figure 5**.

Figure 5

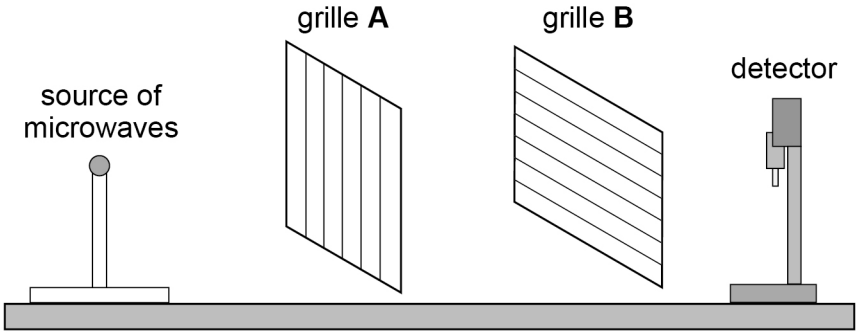

Explain the changes in the voltmeter reading as grille **A** is rotated.

[2 marks]

Question 6 continues on the next page

Do not write outside the box

0 6 . 3 In another experiment the source is placed $0.90\ \mathrm{m}$ away from a metal plate, as shown in **Figure 6**.

Figure 6

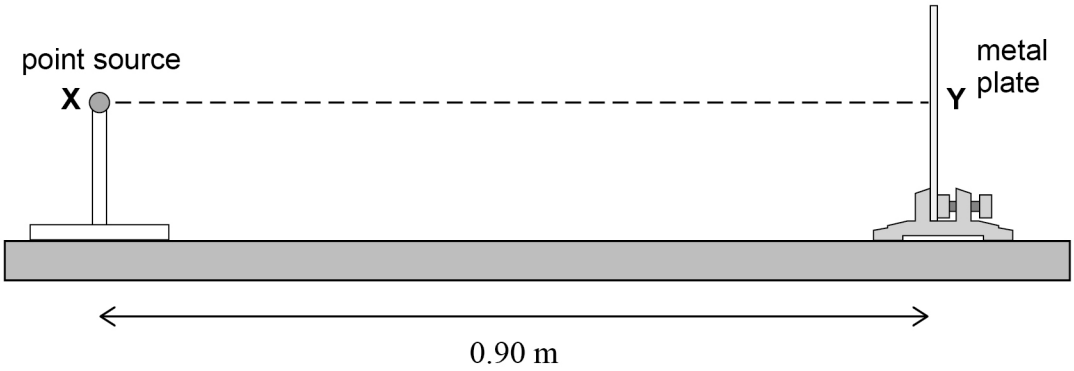

Explain how a stationary wave is formed along the line **XY** between the source and the metal plate.

[3 marks]

Do not write outside the box

0 6 . 4 The microwaves emitted from the source have a wavelength of $60\ \text{cm}$

Sketch on **Figure 7** the shape of the stationary wave formed.

[1 mark]

Figure 7

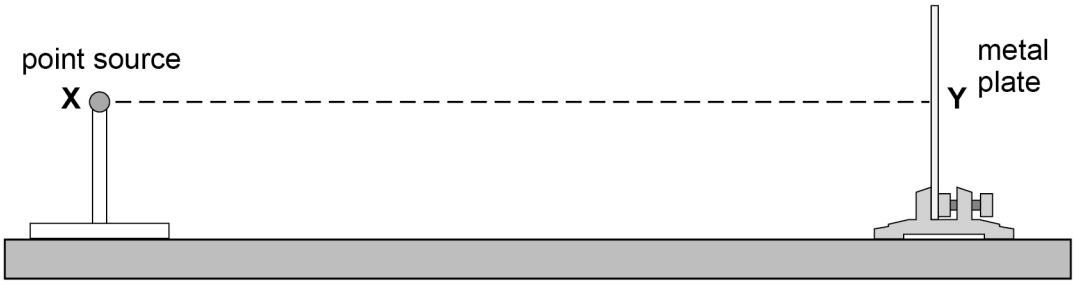

0 6 . 5 A detector connected to a voltmeter can be moved along the line **XY** in **Figure 6**.

Explain how the voltmeter readings vary as the detector is moved along the line **XY**.

[2 marks]

11

Do not write outside the box

0 7 . 1 Define the electromotive force (emf) of a battery.

[2 marks]

0 7 . 2 A battery with an emf of 12.0 V and an internal resistance of 1.5 Ω is connected in the circuit shown in **Figure 8**.

Figure 8

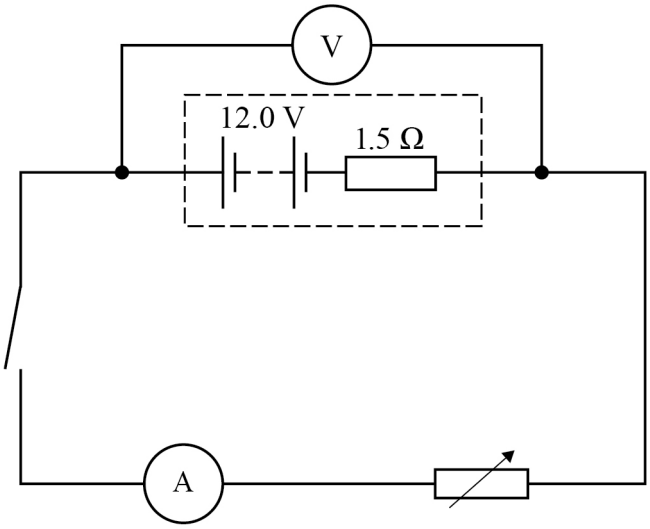

The voltmeter reading is 9.0 V when the current in the circuit is 2.0 A

Calculate the resistance of the variable resistor when the voltmeter reads 9.0 V

[2 marks]

resistance = _____ Ω

Do not write outside the box

0 7 . 3 Determine the maximum current that can be provided by the battery.

[2 marks]

maximum current = _____ A

0 7 . 4 With the switch closed the variable resistor is adjusted to obtain a range of ammeter and voltmeter readings. Finally the switch is opened and a final ammeter and voltmeter reading are obtained.

Sketch on **Figure 9** a graph to show the variation of voltmeter reading V with current I.

Label your axes with suitable numerical values.

[2 marks]

Figure 9

Question 7 continues on the next page

Do not write outside the box

0 7 . 5 The battery, when fully charged, can deliver a total charge of 1.15×10^4 C

For a particular application, the fully-charged battery is required to supply a constant current to an external circuit of resistance $0.1\ \Omega$ for 30 minutes.

Discuss the suitability of the battery for this application.

You should use calculations to support your answer.

[3 marks]

Do not write outside the box

0 7 . 6 **Figure 10** shows the variation with current of the power dissipated in the variable resistor.

Figure 10

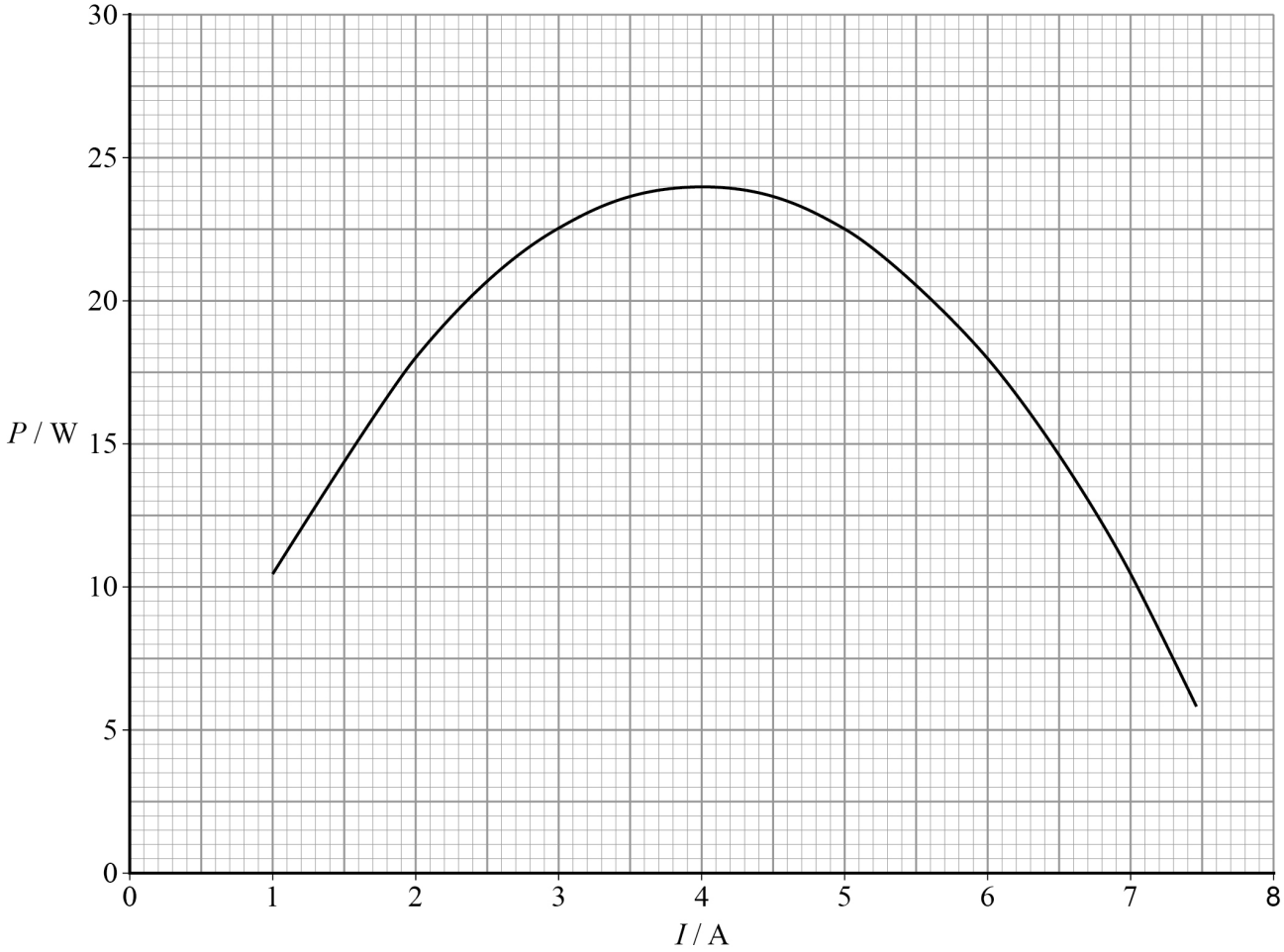

Calculate using data from **Figure 10** the value of the variable resistance when P is a maximum.

[3 marks]

variable resistance = _____ Ω

Question 7 continues on the next page

Do not write outside the box

0 7 . 7 **Figure 10** suggests that as the current increases past 7.5 A, the power dissipated in the variable resistor eventually reaches zero.

Explain why the circuit behaves in this way.

[2 marks]

16

END OF SECTION A

Do not write outside the box

Section B

Answer **all** questions in this section.

0 8 The variation of the maximum kinetic energy of photoelectrons with the wavelength of incident electromagnetic radiation may be investigated using the apparatus in **Figure 11**.

Figure 11

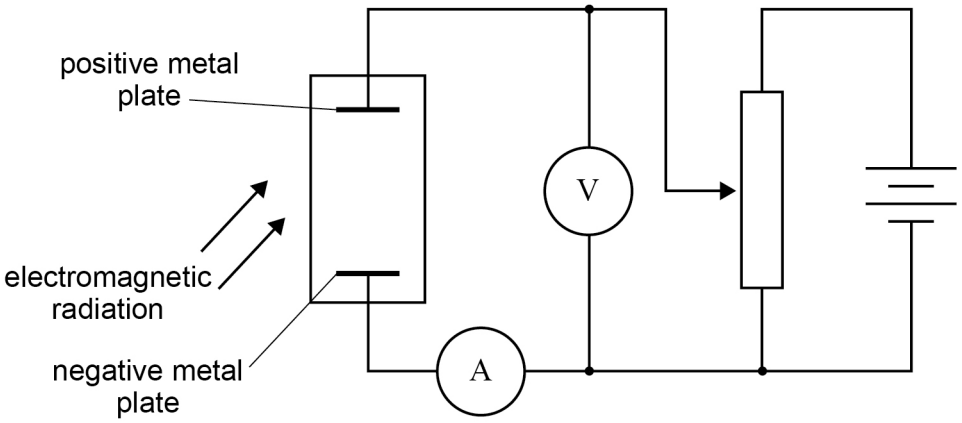

When the positive metal plate is illuminated with monochromatic electromagnetic radiation of a sufficiently high frequency, electrons are emitted and move towards the negative plate, causing a current in the circuit. The potential difference between the positive plate and the negative plate is adjusted until the current is zero. When this happens, the potential difference measured by the voltmeter is called the stopping potential V_s.

The maximum kinetic energy of the photoelectrons $E_{k(max)}$ is eV_s.

Question 8 continues on the next page

Do not write outside the box

0 8 . 1 In one experiment, the results in **Table 1** were obtained:

Table 1

Frequency of incident radiation / 10^{14} Hz	V_s / V	$E_{k(max)}$ / 10^{-20} J
6.0	0.15 ± _____	2.4 ± 0.8
6.8	0.55 ± _____	8.6 ± 0.8
7.5	0.80 ± _____	12.8 ± 0.8
8.6	1.25 ± _____	20.0 ± 0.8

Complete **Table 1** by calculating the values of the absolute uncertainties of V_s.

[1 mark]

0 8 . 2 The values of frequency and $E_{k(max)}$ have been plotted on **Figure 12**.

Complete the graph by adding error bars for each point and by drawing a best fit straight line.

Assume that there is negligible uncertainty in the values of frequency.

[2 marks]

0 8 . 3 The equation for the graph is:

$$E_{k(max)} = hf - \phi$$

where h is the Planck constant and ϕ is the work function of the metal from which the positive plate is made.

Determine using your graph a value for h.

[2 marks]

h = _____ J s

Do not write outside the box

Figure 12

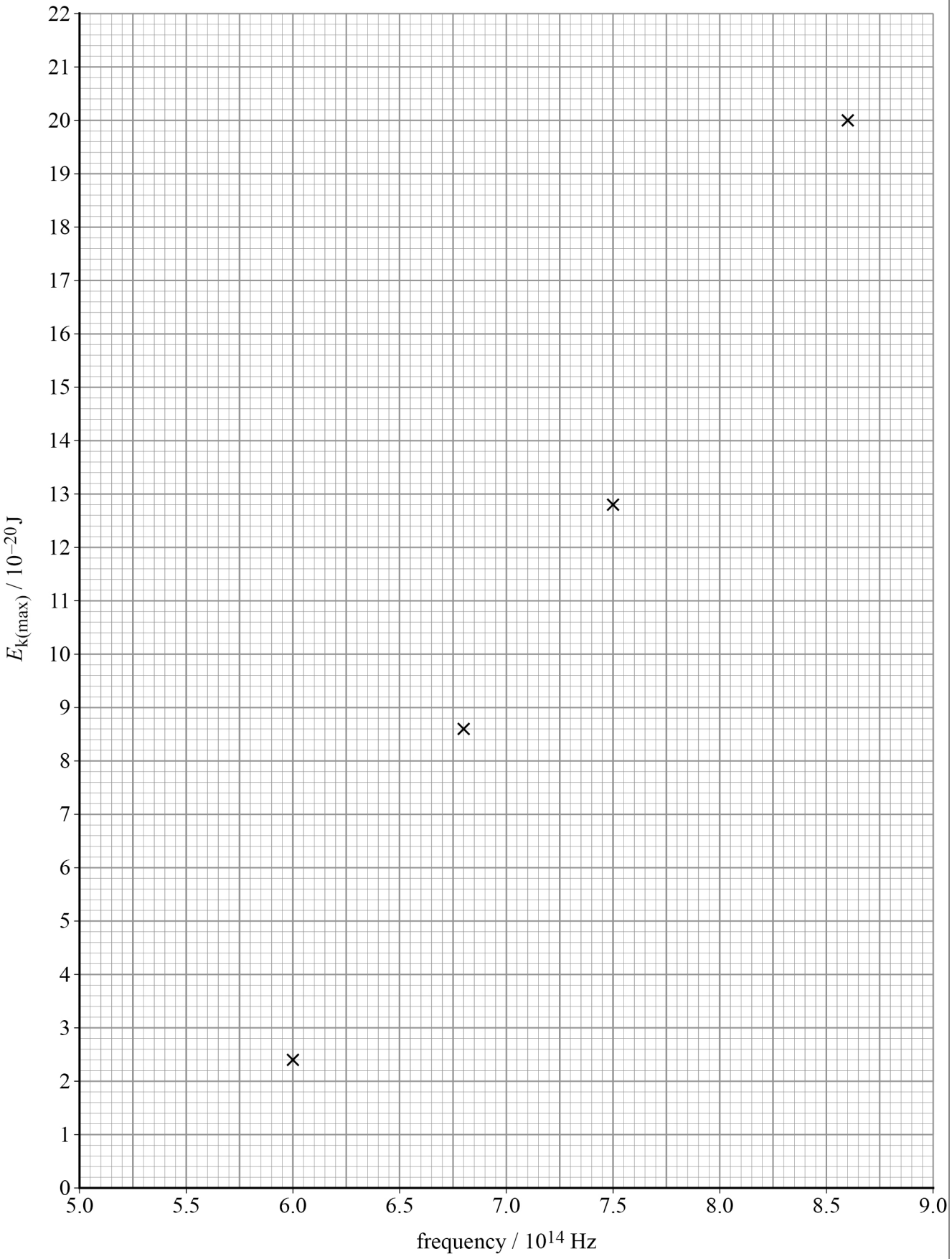

Question 8 continues on the next page

Do not write outside the box

0 8 . 4 Photoelectrons are not emitted below a threshold frequency f_0.

Determine using your graph the value of f_0.

[1 mark]

f_0 = _____ Hz

0 8 . 5 Determine using your graph the uncertainty in your value of f_0.

[2 marks]

uncertainty in f_0 = ± _____ Hz

0 8 . 6 Suggest **one** way in which the results in question **08.1** could be improved.

[1 mark]

_____

_____

9

Do not write outside the box

Turn over for the next question

DO NOT WRITE ON THIS PAGE
ANSWER IN THE SPACES PROVIDED

Do not write outside the box

0 9 A racing car of mass 760 kg stops for a tyre change.
A mechanic uses a lever to hold the car in equilibrium as shown in **Figure 13**.
The lever exerts a vertical force of 550 N on the car.

Figure 13

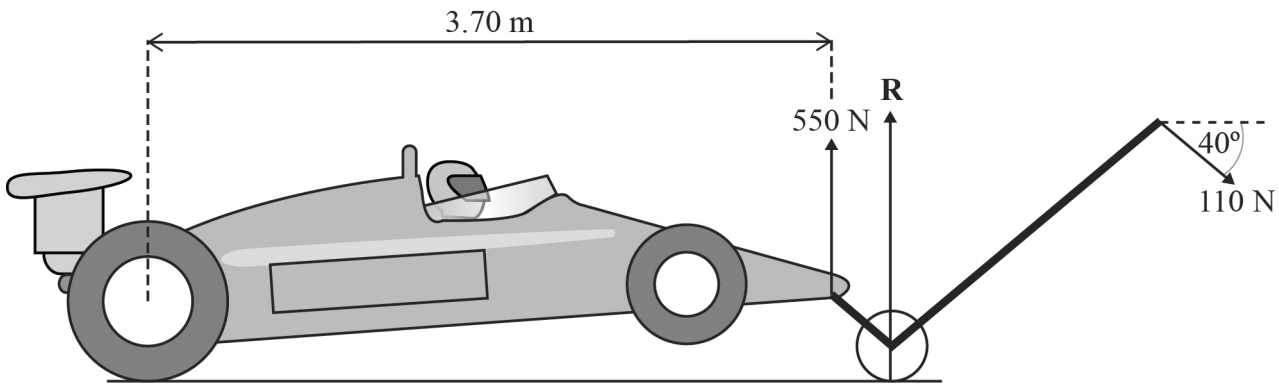

0 9 . 1 Draw and label **two** other vertical forces acting on the car in **Figure 13**.

[2 marks]

0 9 . 2 Calculate the horizontal distance between the centre of the rear wheel and the centre of mass of the car.

[2 marks]

distance = _____ m

Do not write outside the box

0 9 . 3 The mechanic exerts a force on the lever of $110\ \mathrm{N}$ at $40°$ to the horizontal as shown in **Figure 13**. The normal reaction force of the ground on the lever is $\mathbf{R}$.

Calculate the magnitude of $\mathbf{R}$.

[3 marks]

magnitude of $\mathbf{R}$ = _____ N

7

END OF SECTION B

Do not write outside the box

Section C

Each of the questions in this section is followed by four responses **A**, **B**, **C** and **D**.

For each question select the best response.

Only **one** answer per question is allowed.
For each answer completely fill in the circle alongside the appropriate answer.

CORRECT METHOD

WRONG METHODS 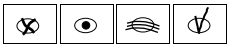

If you want to change your answer you must cross out your original answer as shown.

If you wish to return to an answer previously crossed out, ring the answer you now wish to select as shown.

You may do your working in the blank space around each question but this will not be marked.
Do **not** use additional sheets for this working.

Do not write outside the box

1 0 The graph shows the variation with distance of the displacement of a progressive wave.

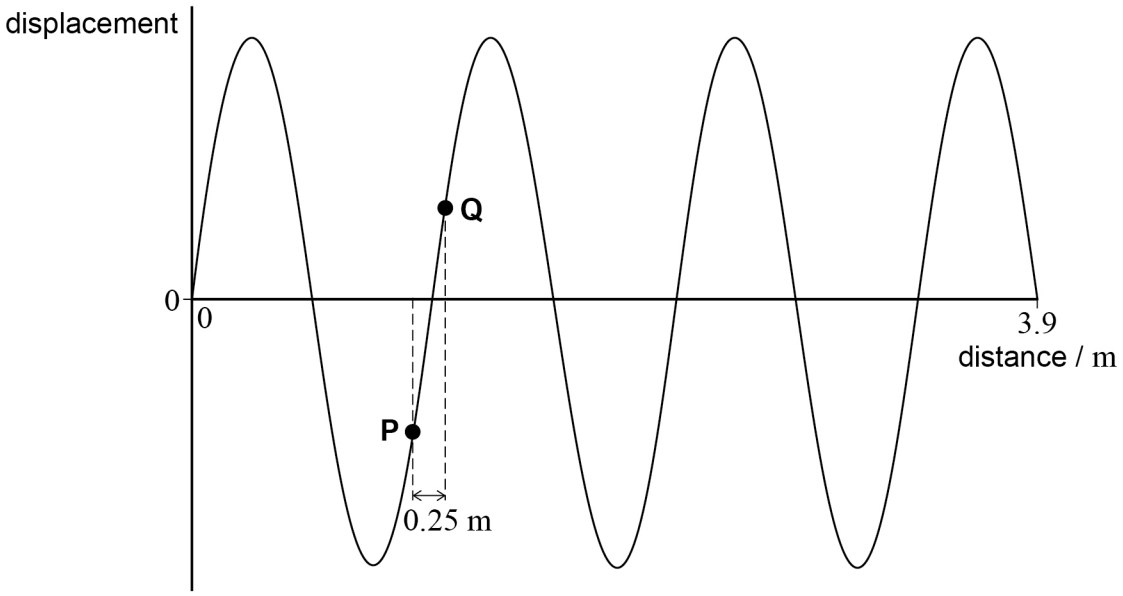

What is the phase difference between points **P** and **Q**?

[1 mark]

A 0.22 rad

B 0.40 rad

C 1.2 rad

D 1.4 rad

1 1 Which is equivalent to the SI unit of resistivity?

[1 mark]

A $A\ V^{-1}\ m^{-1}$

B $C^{-1}\ V\ s\ m$

C $V\ A\ m$

D $C\ V\ m\ s^{-1}$

Turn over ►

Do not write outside the box

1 2 When a mass m, suspended from a spring with spring constant k, is set into simple harmonic motion it oscillates with time period T.

What is the time period of a mass $2m$ suspended from a spring with a spring constant $\frac{k}{2}$?

[1 mark]

A $\frac{T}{2}$

B $\frac{T}{\sqrt{2}}$

C $\sqrt{2}\,T$

D $2T$

1 3 The cladding of a step-index optical fibre

[1 mark]

A reduces material dispersion.

B reduces signal loss.

C must have a higher refractive index than the core.

D must be opaque.

1 4 Monochromatic light of wavelength $610\ \text{nm}$ illuminates a double slit.
An interference pattern is observed on a screen $4.5\ \text{m}$ from the slits. Consecutive bright fringes are $1.1\ \text{cm}$ apart.

What is the slit separation?

[1 mark]

A $0.0025\ \text{mm}$

B $0.025\ \text{mm}$

C $0.25\ \text{mm}$

D $2.5\ \text{mm}$

Do not write outside the box

1 5 A length **PQRS** of resistance wire of uniform cross-section is connected to a battery of emf 3.0 V and negligible internal resistance.

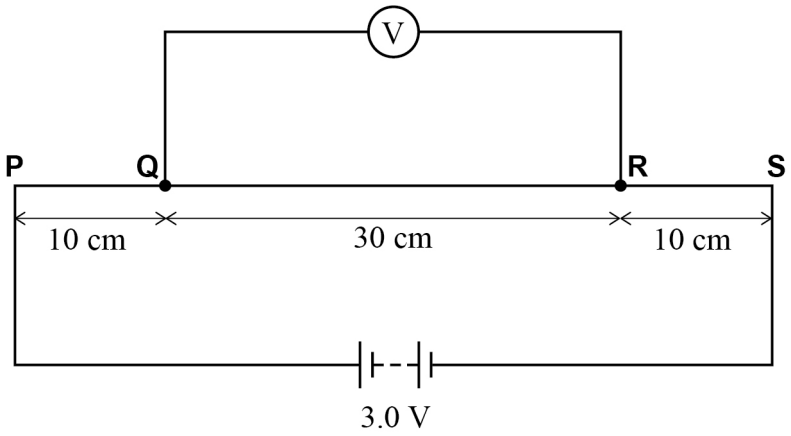

What is the reading on the voltmeter?

[1 mark]

A 0.6 V

B 1.2 V

C 1.8 V

D 2.4 V

Turn over for the next question

Do not write outside the box

1 6 Which component has the voltage–current (V–I) characteristics shown by the graph below?

[1 mark]

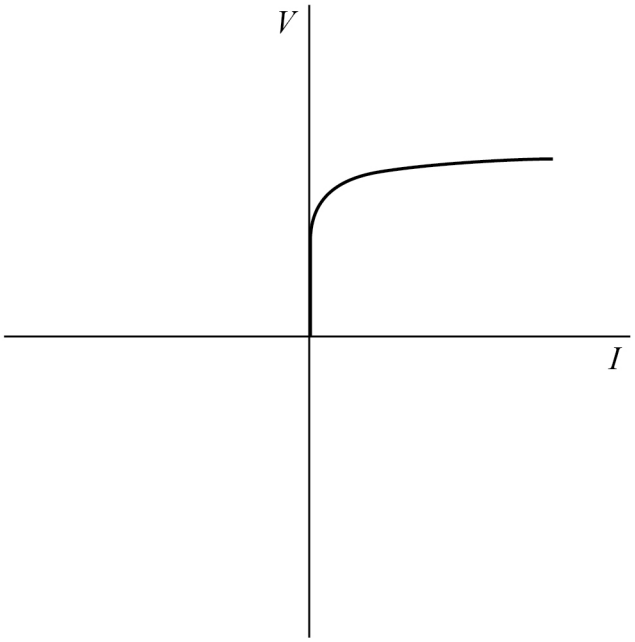

A filament lamp

B metal conductor at constant temperature

C semiconductor diode

D thermistor

1 7 A diffraction grating has a spacing of $3.0\ \mu\text{m}$

Light of wavelength $610\ \text{nm}$ is incident normally on the diffraction grating.

What is the largest order obtained?

[1 mark]

A 2nd

B 4th

C 5th

D 8th

Do not write outside the box

1 8 What is the de Broglie wavelength of an electron travelling at 30% of the speed of light?

Ignore any relativistic effects.

[1 mark]

A 2.4×10^{-14} m

B 8.1×10^{-14} m

C 2.4×10^{-12} m

D 8.1×10^{-12} m

1 9 The refractive index for light passing from air into medium **A** is 1.3
The refractive index for light passing from air into medium **B** is 1.6

Which statement is **not** correct?

[1 mark]

A The critical angle for light travelling from **A** into **B** is about $54°$

B Light travelling from **B** into **A** will refract away from the normal.

C The speed of light in **A** is about $0.77c$

D Light travels slower in **B** than in **A**.

Turn over for the next question

Do not write outside the box

2 0 The diagram shows the path of a ray of light through two transparent parallel layers.

The refractive indices shown on the diagram are for light travelling from air into each medium.

[1 mark]

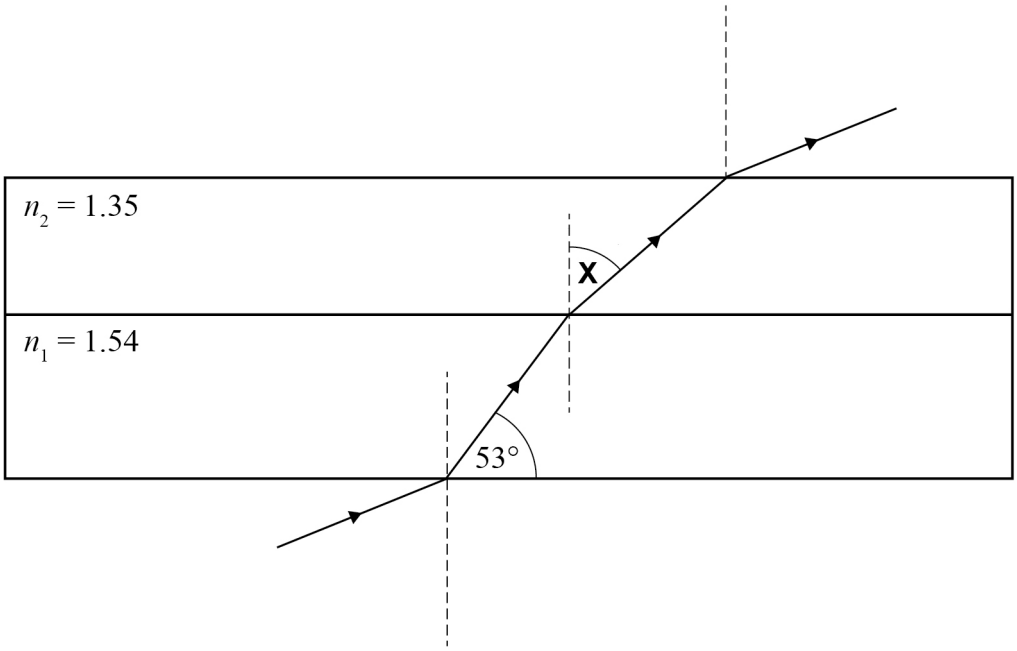

What is angle **X**?

A 32°

B 37°

C 43°

D 67°

Do not write outside the box

2 1 A student wishes to measure the slit separation of a double slit using the interference pattern produced by the slit.

Which row shows the source she should choose and the reason for her choice?

[1 mark]

	Source	Reason	
A	Monochromatic red light	The fringes will be brighter	⬭
B	Monochromatic red light	The interference patterns do not overlap	⬭
C	White light	The fringes will be brighter	⬭
D	White light	The interference patterns do not overlap	⬭

Turn over for the next question

Do not write outside the box

2 2 A simple pendulum is released from its extreme position and completes one oscillation.

Which graph shows the variation of kinetic energy E_k with time t for the oscillation?

[1 mark]

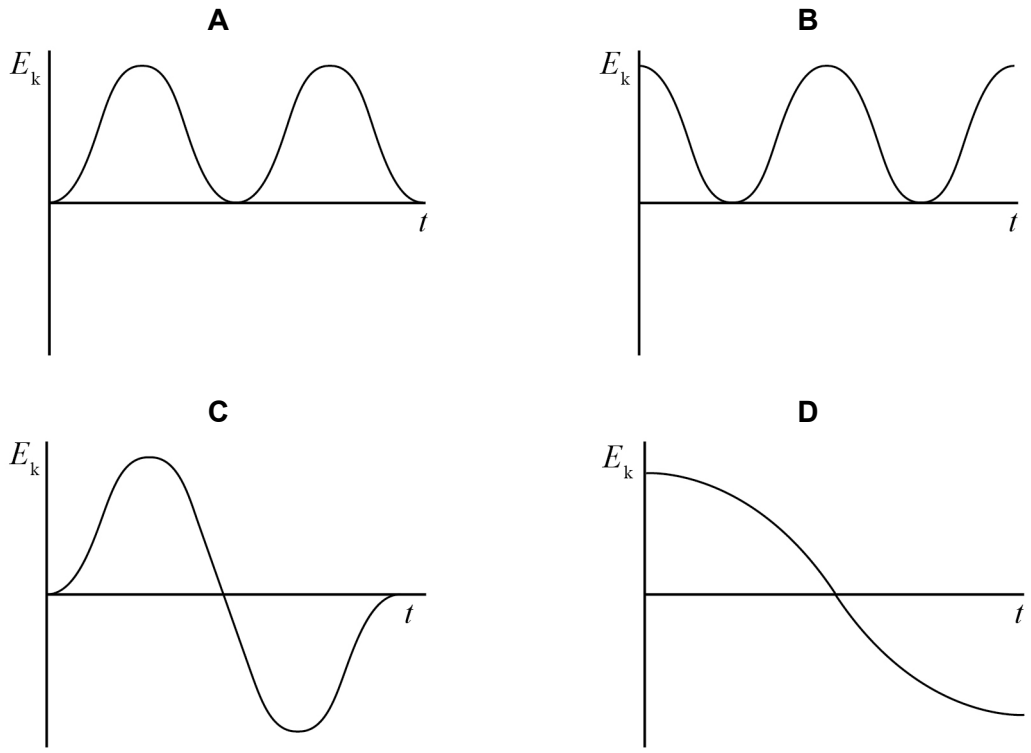

A ⬭

B ⬭

C ⬭

D ⬭

Do not write outside the box

2 3 Which graph shows the variation of amplitude A with driving frequency f for a damped system undergoing forced oscillations?

[1 mark]

A

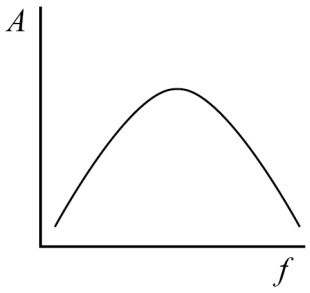

B

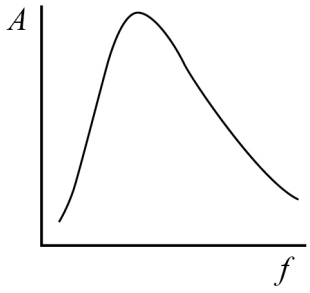

C

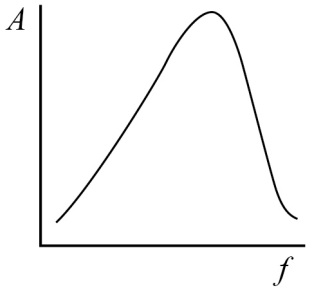

D

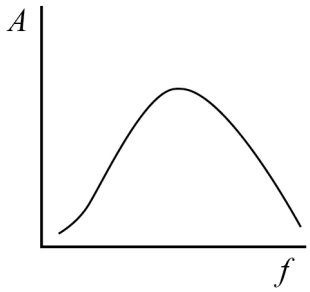

A ⬭

B ⬭

C ⬭

D ⬭

14

END OF QUESTIONS

Do not write outside the box

There are no questions printed on this page

DO NOT WRITE ON THIS PAGE
ANSWER IN THE SPACES PROVIDED

Do not write outside the box

There are no questions printed on this page

DO NOT WRITE ON THIS PAGE
ANSWER IN THE SPACES PROVIDED

Do not write outside the box

There are no questions printed on this page

DO NOT WRITE ON THIS PAGE
ANSWER IN THE SPACES PROVIDED

Copyright information

For confidentiality purposes, acknowledgements of third party copyright material will be published in a separate booklet rather than including them on the examination paper or support materials. This booklet is published after each examination series and is available for free download from www.oxfordaqaexams.org.uk after the live examination series.

Permission to reproduce all copyright material has been applied for. In some cases, efforts to contact copyright-holders may have been unsuccessful and Oxford International AQA Examinations will be happy to rectify any omissions of acknowledgements. If you have any queries please contact the Copyright Team, AQA, Stag Hill House, Guildford, GU2 7XJ.

Copyright © 2018 Oxford International AQA Examinations and its licensors. All rights reserved.