OXFORD AQA
INTERNATIONAL QUALIFICATIONS

Please write clearly in block capitals.

Centre number | | | | | | Candidate number | | | | |

Surname _____

Forename(s) _____

Candidate signature _____
I declare this is my own work.

INTERNATIONAL A-LEVEL
PHYSICS

Unit 3 Fields and their consequences

Tuesday 27 May 2025 | 07:00 GMT | Time allowed: 2 hours

Materials
For this paper you must have:
- a Data and Formulae Booklet as a loose insert
- a ruler with millimetre measurements
- a scientific calculator, which you are expected to use where appropriate
- a protractor.

Instructions
- Use black ink or black ball-point pen.
- Fill in the boxes at the top of this page.
- Answer **all** questions.
- You must answer the questions in the spaces provided. Do not write outside the box around each page or on blank pages.
- All working must be shown.
- If you need extra space for your answer(s), use the lined pages at the end of this book. Write the question number against your answer(s).
- Do all rough work in this book. Cross through any work you do not want to be marked.

Information
- The marks for questions are shown in brackets.
- The maximum mark for this paper is 80.

For Examiner's Use	
Question	Mark
1	
2	
3	
4	
5	
6	
7	
8–22	
TOTAL	

Do not write outside the box

Section A

Answer **all** questions in this section.

0 1 **Figure 1** shows a current-carrying coil inside a uniform magnetic field.
The coil rotates about an axis that is perpendicular to the direction of the field.

Figure 1

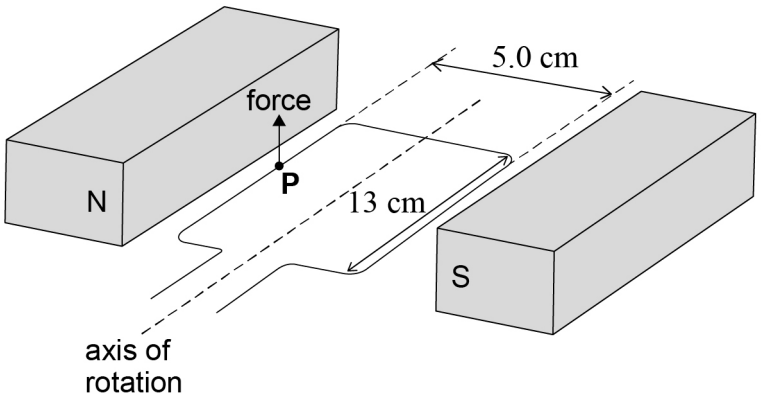

The coil experiences a magnetic force at point **P** as shown in **Figure 1**.

0 1 . 1 Annotate **Figure 1** with an arrow to show the direction of the current in the coil at **P**.
[1 mark]

The uniform magnetic field has a horizontal magnetic flux density of 75 mT.

0 1 . 2 The coil has a length of 13 cm, a width of 5.0 cm and 66 turns.

Determine the couple acting on the coil at the instant shown in **Figure 1**.

current in the coil = 1.5 A

[3 marks]

couple = _____ N m

Do not write outside the box

0 1 . 3 The coil is removed.

Figure 2 shows a vertical metal rod of length $8.75\ \text{cm}$ inside the magnetic field.

Figure 2

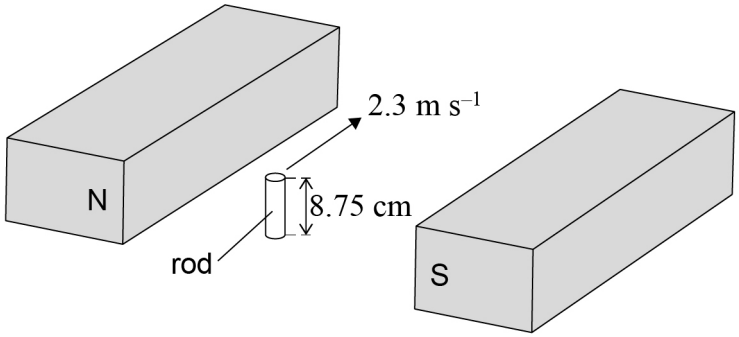

The rod has a constant velocity of $2.3\ \text{m s}^{-1}$ perpendicular to the magnetic flux density.

Calculate the emf induced between the ends of the rod.

[2 marks]

emf = _____ V

6

Turn over for the next question

Do not write outside the box

0 2 Vanadium-52 has a decay constant of $3.08 \times 10^{-3}\ s^{-1}$.

A sample of vanadium-52 has an initial activity of 121 GBq.

0 2 . 1 Determine the time taken for the activity to fall to 51 GBq.

[2 marks]

time = _____ s

0 2 . 2 Calculate the mass of vanadium-52 in the sample when its activity is 51 GBq.

mass of one mole of vanadium-52 atoms = 0.052 kg

[3 marks]

mass = _____ kg

Do not write outside the box

0 2 . 3 The decay of vanadium-52 is random.

Suggest how this affects the ability to make an accurate prediction of:

- the activity of the sample 1 ms after its activity was 51 GBq
- whether a nucleus will decay in a time interval of 1 ms.

[2 marks]

7

Turn over for the next question

Do not write outside the box

0 3 **Figure 3** shows a person riding a bike on a horizontal track.

The bike and rider have a centre of mass at point **C**.
C moves in a circle about point **O**. The circle has a radius of $22.5\ \mathrm{m}$.

Figure 3

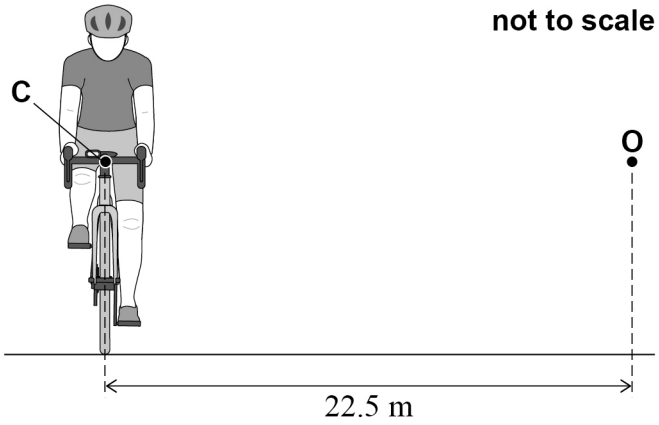

The total mass of the bike and rider is $79.5\ \mathrm{kg}$.
The bike and rider travel at a constant speed of $14.2\ \mathrm{m\ s^{-1}}$.

The total frictional force acting on the bike is at its maximum value.
F_1 is the horizontal component of the frictional force acting towards **O**.

0 3 . 1 Show that F_1 is approximately $710\ \mathrm{N}$.

[1 mark]

Do not write outside the box

A different cycling track is at an angle to the horizontal as shown in **Figure 4**.

The bike and rider travel in a horizontal circle about **O** on this track.

Figure 4

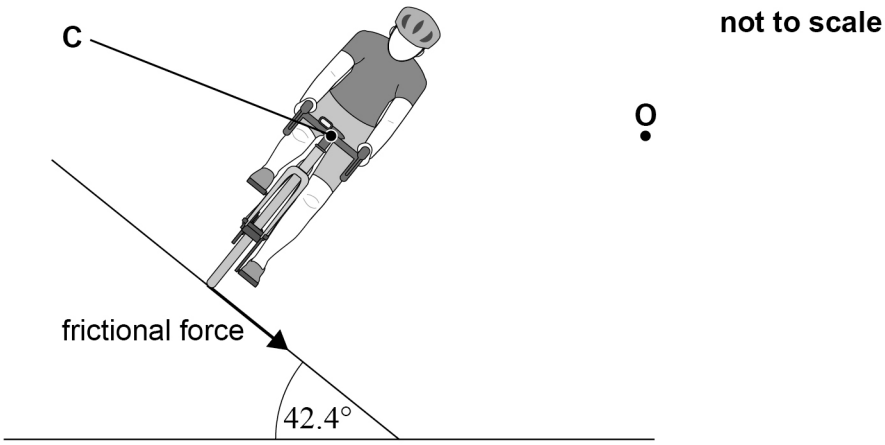

not to scale

0 3 . 2 Annotate **Figure 4** with labelled arrows to show:

- the normal contact force **N** from the track on the bike
- the combined weight **W** of the bike and rider
- the resultant force **R**.

[2 marks]

Question 3 continues on the next page

Do not write outside the box

The track in **Figure 4** is at an angle of $42.4°$ to the horizontal.

C moves around **O** in a horizontal circle of radius $22.5\ \mathrm{m}$.

0 3 . 3 The bike and rider are travelling at a constant speed of $14.2\ \mathrm{m\ s^{-1}}$ and experience a normal contact force of $1040\ \mathrm{N}$.

F_2 is the horizontal component of the frictional force acting on the bike.

Show that the magnitude of F_2 is less than the magnitude of F_1.

[3 marks]

Do not write outside the box

0 3 . 4 The bike and rider now travel in a circle of radius $22.5\ \mathrm{m}$ on the track in **Figure 4** at a constant speed greater than $14.2\ \mathrm{m\ s^{-1}}$.

At this speed, the frictional force between the bike's tyres and the track is at its maximum value.

Explain why the bike and rider can travel at a greater speed on the track in **Figure 4** than on the track in **Figure 3**.
You should refer to the forces acting on the bike and rider.

[4 marks]

10

Turn over for the next question

Do not write outside the box

There are no questions printed on this page

DO NOT WRITE ON THIS PAGE
ANSWER IN THE SPACES PROVIDED

Do not write outside the box

0 4 . 1 Define gravitational potential at a point.

[2 marks]

Figure 5 shows a binary star system consisting of two stars **A** and **B**.
A and **B** each have the same mass and their centres are separated by a distance of 3.0×10^{12} m. **O** is the point midway between **A** and **B**.

Figure 5

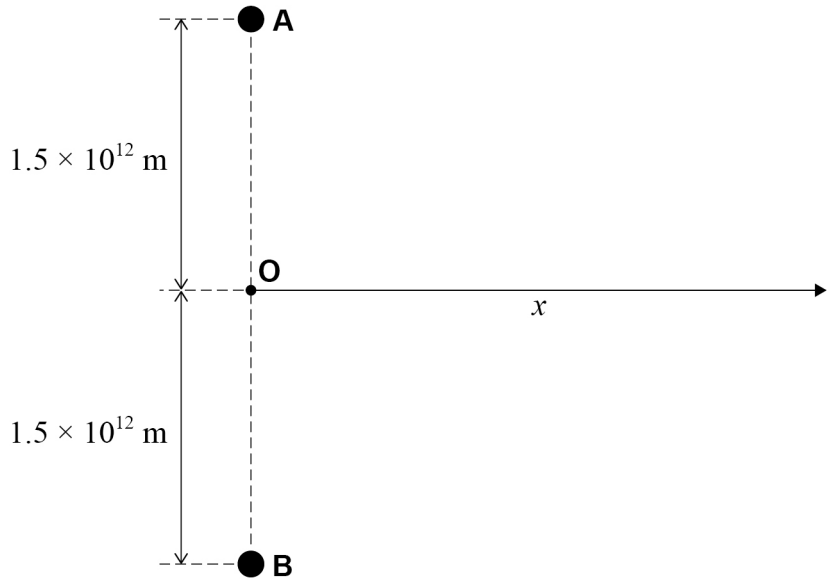

x is the distance from **O** along a line perpendicular to **AB**.
V_T is the total gravitational potential due to both **A** and **B**.

0 4 . 2 When $x = 0$ the value of V_T is -0.711 GJ kg^{-1}.

Calculate the mass of **A**.

[2 marks]

mass of **A** = _____ kg

Question 4 continues on the next page

Do not write outside the box

Figure 6 shows the variation of V_T with x.

Figure 6

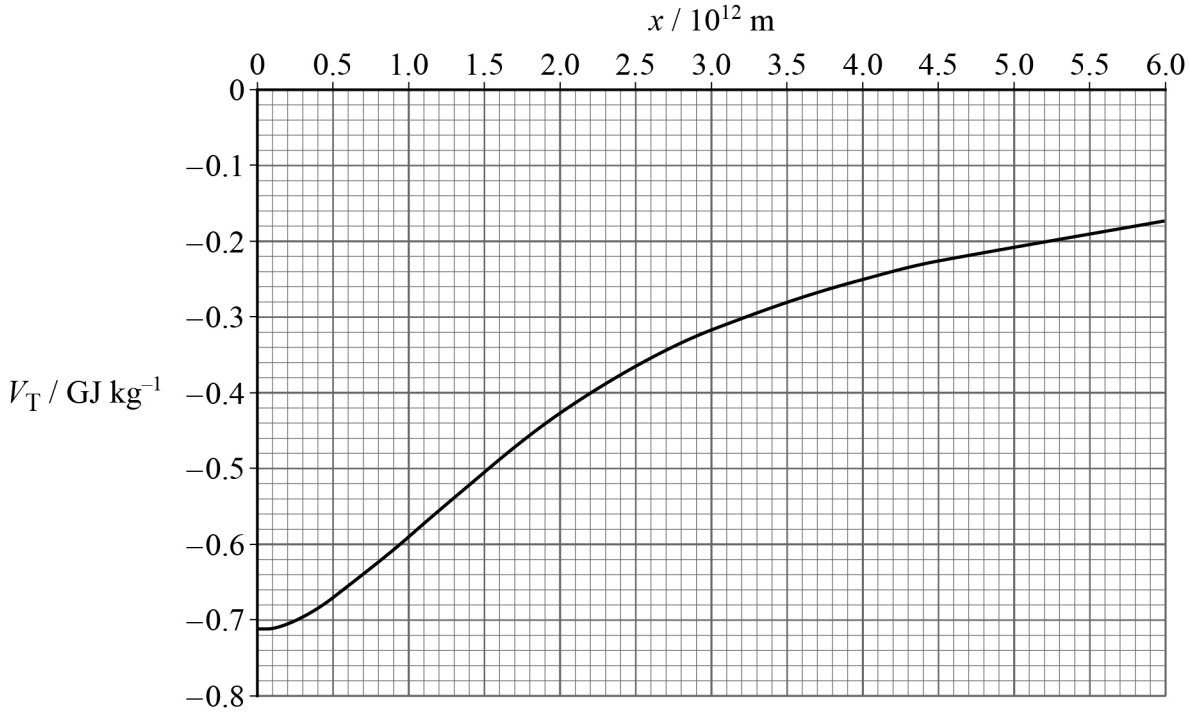

The magnitude of the resultant gravitational field strength due to **A** and **B** is g_T.

0 4 . 3 State the value of x at which g_T has its maximum value on **Figure 6**.
Go on to estimate this value of g_T.

Annotate **Figure 6** to support your calculation.

[3 marks]

x = _____ m

maximum value of g_T = _____ N kg^{-1}

Do not write outside the box

0 4 . 4 Describe the variation of g_T with x shown in **Figure 6**.

[2 marks]

0 4 . 5 **Figure 7** shows the variation of $\ln g_T$ with $\ln x$ for larger values of x than those shown in **Figure 6**.

Figure 7

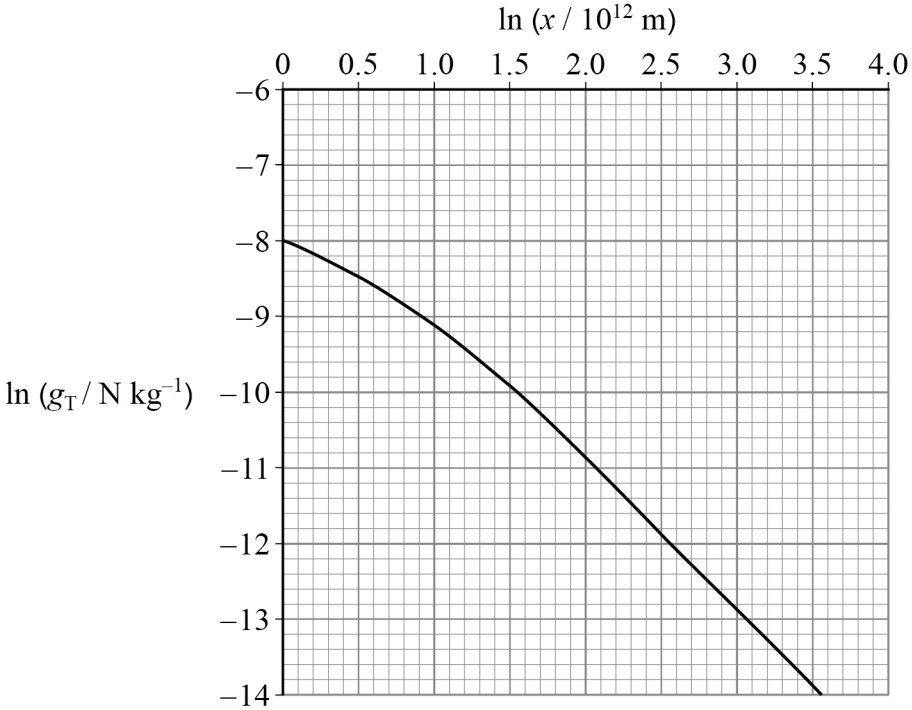

The variation of g_T with x follows an inverse-square law when x is greater than a minimum value x_{min}.

Determine x_{min}.
Annotate **Figure 7** to support your answer.

[3 marks]

x_{min} = _____ m

12

Do not write outside the box

0 5 This question is about a single proton as it moves through a linear accelerator.

In the linear accelerator, the proton is accelerated by a uniform electric field.
The uniform electric field is created by a potential difference V that acts across a distance of $2.0\ \text{cm}$.

The electric field strength is $13.3\ \text{MN C}^{-1}$.

0 5 . 1 Calculate V.
Give your answer to an appropriate number of significant figures.

[3 marks]

$V =$ _____ V

0 5 . 2 Calculate the acceleration of the proton.

mass of proton = $1.67 \times 10^{-27}\ \text{kg}$

[3 marks]

acceleration = _____ m s^{-2}

Do not write outside the box

In the linear accelerator the proton travels through a series of hollow metal cylinders.

Figure 8 shows the first two hollow metal cylinders **C1** and **C2**.

V is applied between **C1** and **C2** to accelerate the proton as it moves from **C1** to **C2**.

Figure 8

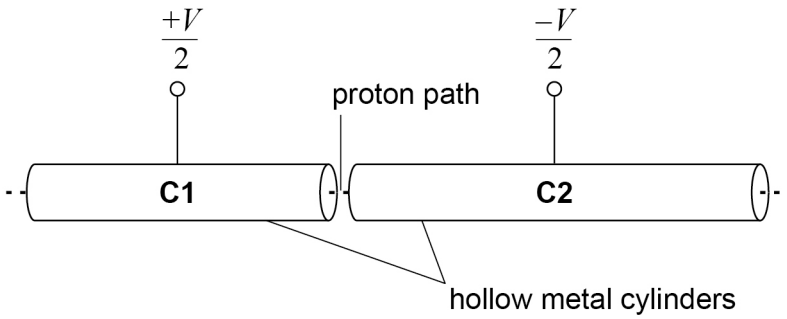

The surface of **C1** is at a potential of $\frac{+V}{2}$ and the surface of **C2** is at a potential of $\frac{-V}{2}$.

The linear accelerator is inside a vacuum.

0 5 . 3 Explain why the acceleration of the proton is zero inside **C1** and inside **C2**.

[3 marks]

Question 5 continues on the next page

Do not write outside the box

0 5 . 4 The proton takes the same time to pass through each metal cylinder.

Explain why the length of **C2** is greater than the length of **C1**.

[2 marks]

11

Do not write outside the box

0 6 **Figure 9** shows a capacitor circuit.

Figure 9

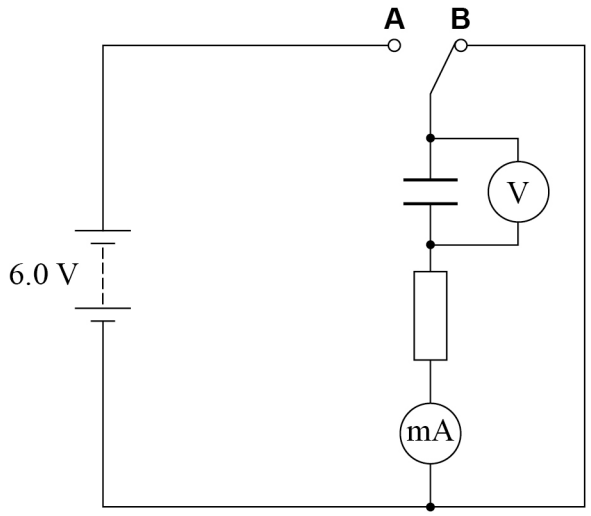

The battery has an emf of $6.0\ \mathrm{V}$ and negligible internal resistance.
Initially, the capacitor is fully discharged.

The switch is moved to position **A** at time $t = 0$

0 6 . 1 Calculate $\dfrac{\text{voltmeter reading}}{\text{emf of the battery}}$ after a time equal to one time constant.

[1 mark]

$\dfrac{\text{voltmeter reading}}{\text{emf of the battery}} =$ _____

Question 6 continues on the next page

Do not write outside the box

The switch is moved to position **B** at time $t = 7.0$ s.

Figure 10 shows the variation of the milliammeter reading with t.

Figure 10

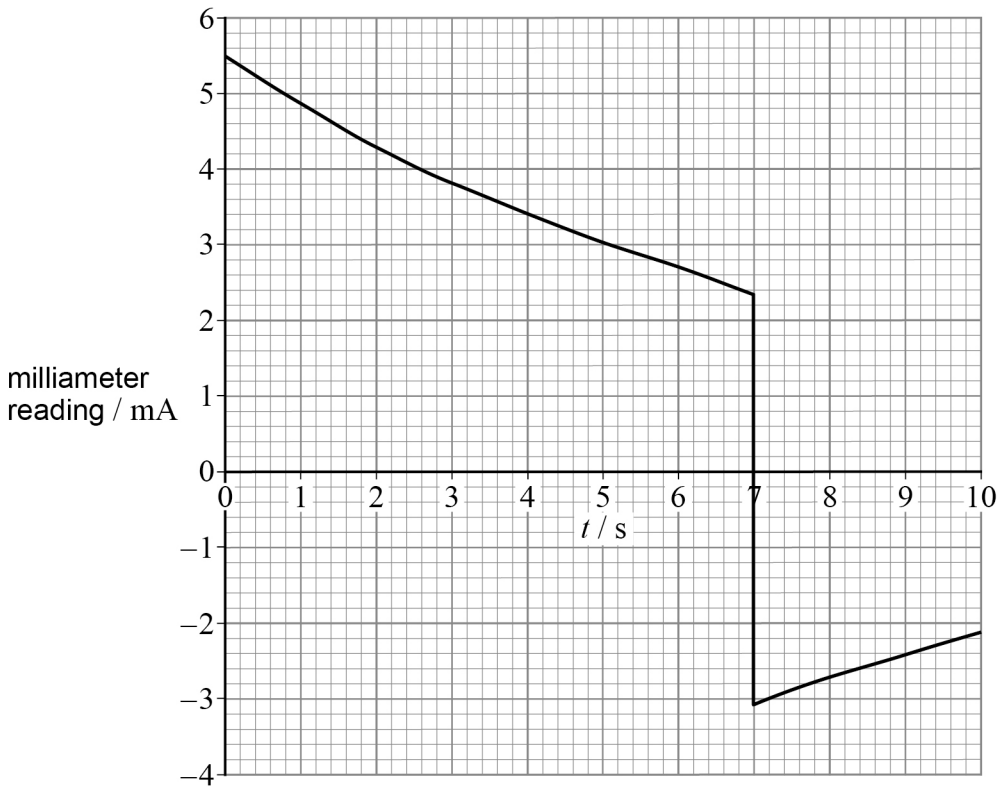

0 6 . 2 Show that the resistance of the resistor is approximately $1000\ \Omega$.

[2 marks]

Do not write outside the box

0 6 . 3 Determine the time constant and the capacitance of the capacitor in this circuit.

[3 marks]

time constant = _____ s

capacitance = _____ F

Question 6 continues on the next page

Do not write outside the box

0 6 . 4 Explain the shape of the graph in **Figure 10**.

In your answer you should refer to:

- the changes in the voltmeter reading from $t = 0$ to $t = 7.0$ s
- the relationship between the voltmeter and milliammeter readings from $t = 0$ to $t = 7.0$ s
- the changes in the voltmeter and milliammeter readings when t is greater than 7.0 s.

No calculations are required.

[6 marks]

12

Do not write outside the box

0 7 **Figure 11** shows a simple pendulum used in an experiment to measure the acceleration g due to gravity.
Figure 11 also shows a card marked with a vertical line.

Figure 11

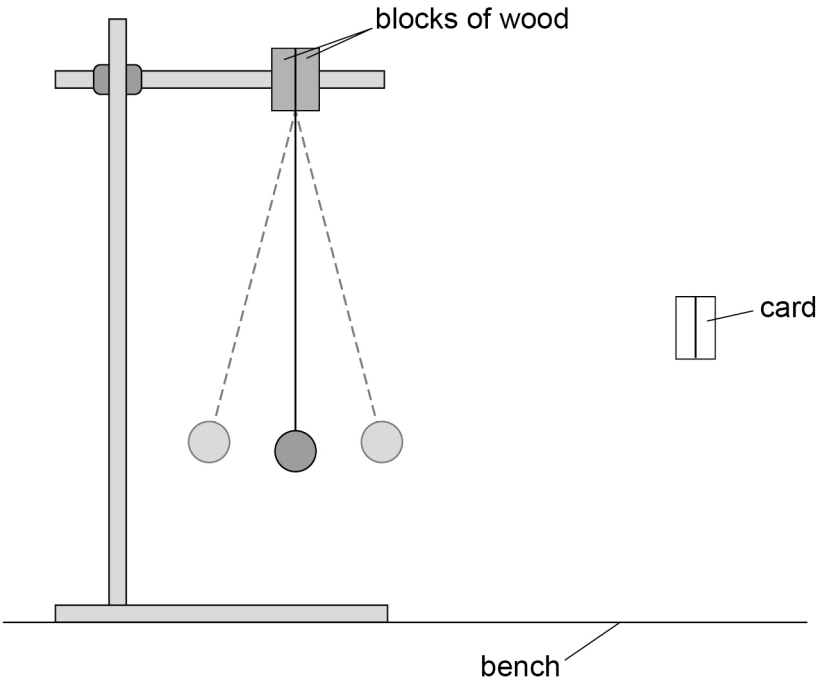

0 7 . 1 Annotate **Figure 11** with a double-headed arrow to show the length L of the pendulum.

[1 mark]

0 7 . 2 The card is to be used as a fiducial marker to reduce the uncertainty in the measurement of the period T of the pendulum.

Draw the card in a suitable position on **Figure 11**.
Go on to explain why you have chosen this position.

[2 marks]

_____

_____

_____

_____

Question 7 continues on the next page

Do not write outside the box

0 7 . 3 Describe **two** other techniques that can be used to minimise the uncertainty in T.

[2 marks]

1 _____

_____

_____

_____

2 _____

_____

_____

_____

Do not write outside the box

0 7 . 4 A student varies L and attempts to measure the period T for each value of L.

Figure 12 shows the student's graph of their T^2 against L.

Figure 12

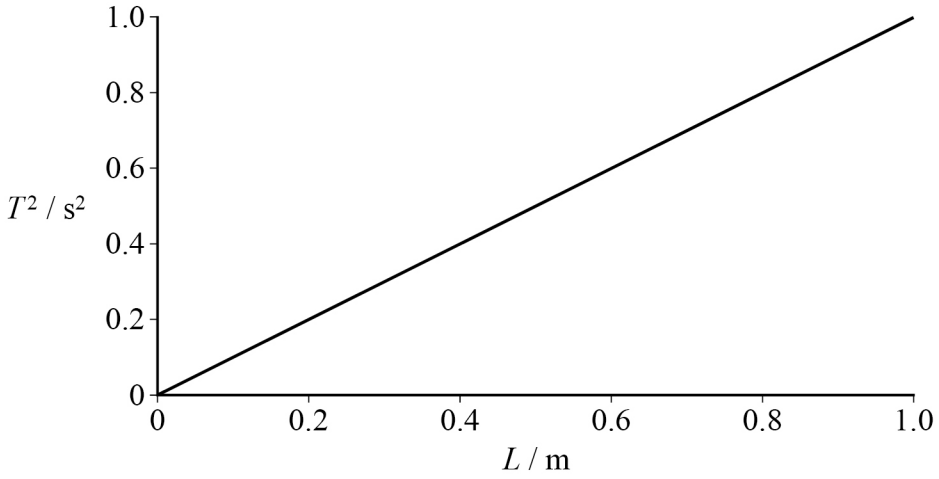

Due to a mistake in their measurement of T, the student obtains a value for g of $39.1\ \text{m s}^{-2}$.

Suggest the mistake made by the student.
Go on to determine the correct value for g for the student's data.

[2 marks]

g = _____ m s^{-2}

7

END OF SECTION A

Do not write outside the box

Section B

Each of the questions in this section is followed by four responses, **A**, **B**, **C** and **D**.

For each question select the best response.

Only **one** answer per question is allowed.
For each question, completely fill in the circle alongside the appropriate answer.

CORRECT METHOD ⬬ WRONG METHODS

If you want to change your answer you must cross out your original answer as shown.

If you wish to return to an answer previously crossed out, ring the answer you now wish to select as shown.

You may do your working in the blank space around each question but this will not be marked. Do **not** use additional pages for this working.

0 8 An object moves with simple harmonic motion of amplitude $0.80\ \mathrm{m}$ and period $9.0\ \mathrm{s}$.

What is the speed of the object when its displacement is $0.60\ \mathrm{m}$?

[1 mark]

A $0.14\ \mathrm{m\ s^{-1}}$

B $0.20\ \mathrm{m\ s^{-1}}$

C $0.37\ \mathrm{m\ s^{-1}}$

D $0.42\ \mathrm{m\ s^{-1}}$

Do not write outside the box

0 9 A damped oscillator is set into forced vibrations by a periodic driving force of frequency f. Graphs **A**, **B**, **C** and **D** are drawn to the same scale.

Which graph shows the heaviest damping?

[1 mark]

A

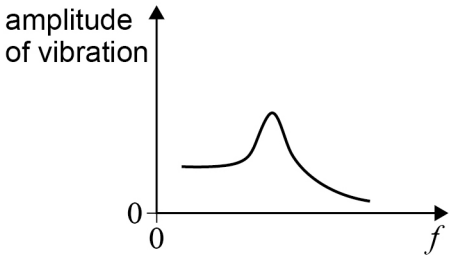

B

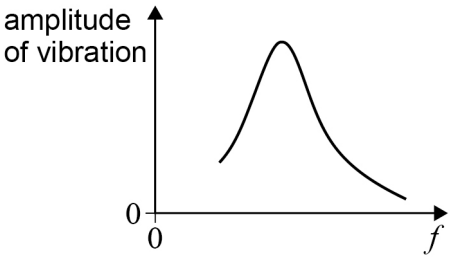

C

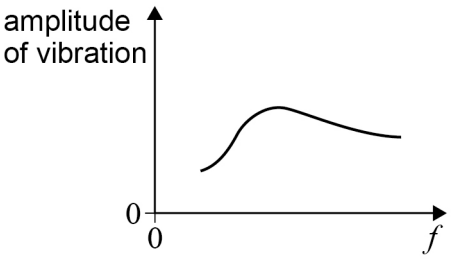

D

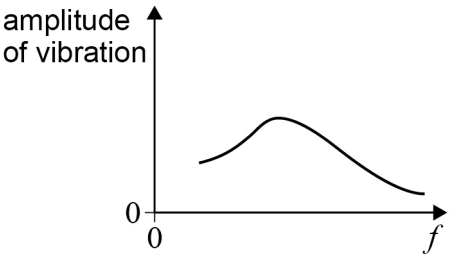

Do not write outside the box

1 0 A satellite orbits the Earth at a constant orbital speed of v.
The radius of the orbit is R.

The satellite is moved to a new orbit of the Earth where it has a constant orbital speed of $2v$.

What is the radius of the new orbit?

[1 mark]

A $\frac{R}{4}$

B $\frac{R}{2}$

C $2R$

D $4R$

1 1 Four point charges are placed at the corners of a square as shown.

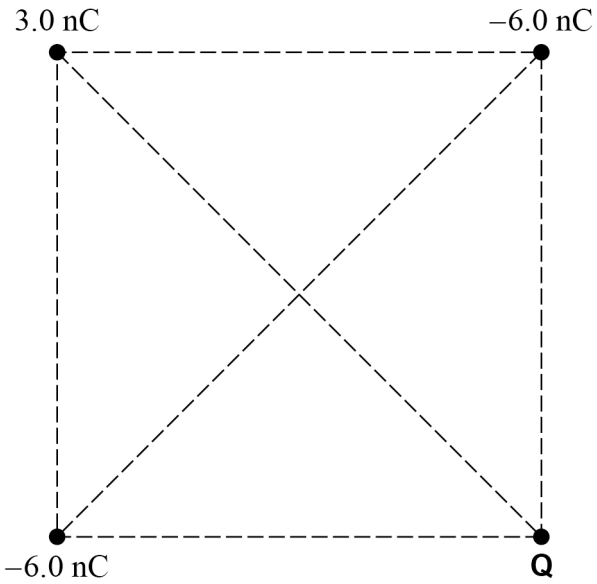

The electric potential is zero at the centre of the square.

What is the charge of **Q**?

[1 mark]

A –9.0 nC

B –3.0 nC

C 3.0 nC

D 9.0 nC

Do not write outside the box

1 2 Which is equivalent to the farad?

[1 mark]

A $A\ s\ V^{-1}$ ⬭

B $A\ s^{-1}\ V^{-1}$ ⬭

C $C\ J^{-1}$ ⬭

D $V\ C^{-1}$ ⬭

1 3 A student wants to construct a capacitor using two sheets of copper and a sheet of dielectric material. All of the sheets have the same area.

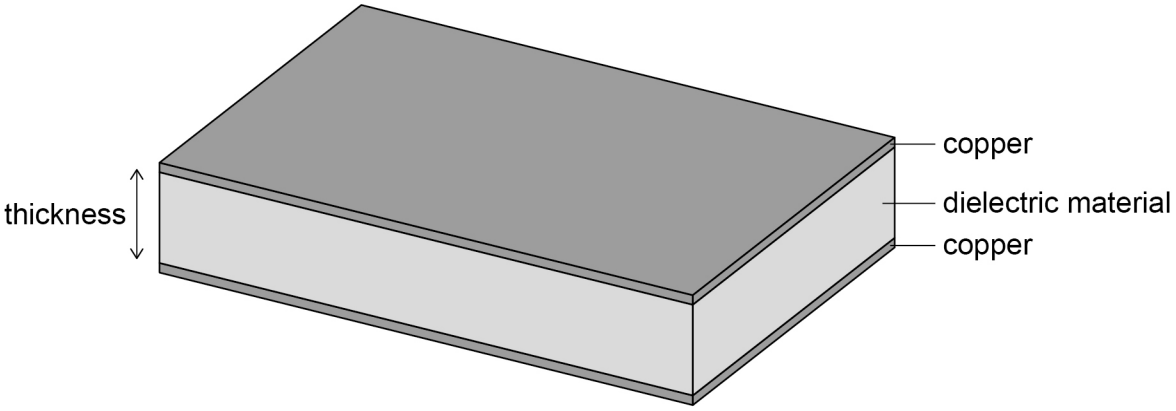

A sheet of dielectric material is inserted into the space between the sheets of copper so that the sheets of copper are in contact with the material.

The student has four sheets of dielectric material **A**, **B**, **C** and **D**, each with a different thickness and relative permittivity.

Which sheet produces a capacitor with the largest capacitance?

[1 mark]

	Thickness / mm	Relative permittivity	
A	0.04	1.5	⬭
B	0.06	2.4	⬭
C	0.08	3.6	⬭
D	0.16	6.2	⬭

Do not write outside the box

1 4 A sample of radioactive radium-222 contains 1.00×10^{20} atoms.
Radium-222 has a half-life of 3.82 days.

How many radium-222 atoms decay in 10 days?

[1 mark]

A 3.42×10^{13}

B 1.76×10^{14}

C 1.63×10^{19}

D 8.37×10^{19}

1 5 Which graph is **not** a straight line for a radioactive nuclide?

[1 mark]

A number of nuclei that decay every second against number of undecayed nuclei

B $\ln$(number of decayed nuclei) against $\ln$(time)

C activity against number of nuclei that decay every second

D $\ln$(activity) against $\ln$(number of undecayed nuclei)

1 6 A particle with charge Q is travelling with speed v as it enters a uniform magnetic field.
The field has a magnetic flux density B.
The particle experiences a magnetic force that is vertically upwards as it enters the field.

Which statement must **always** be correct?

[1 mark]

A The force on the particle is BQv.

B The kinetic energy of the particle is constant.

C The magnetic force on the particle remains vertically upwards.

D The particle follows a circular path.

Do not write outside the box

1 7 A coil with 100 turns has a length of 35 mm and a width of 20 mm. The coil is placed in a uniform magnetic field of magnetic flux density 0.40 T.

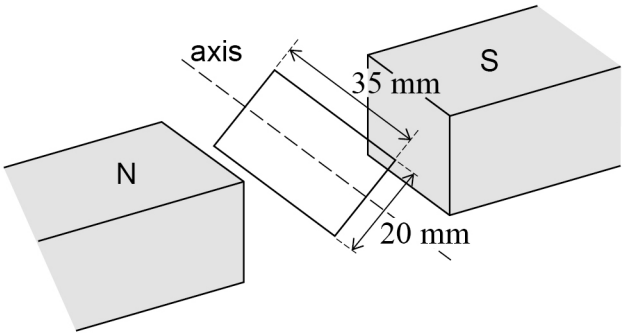

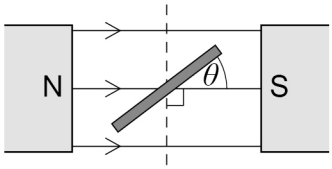

The flux linkage in the coil is 1.0×10^{-2} Wb when the angle is θ.
θ is shown in the diagram.

What is θ?

[1 mark]

A 1.2° ⬭

B 21° ⬭

C 69° ⬭

D 89° ⬭

1 8 A single-turn rectangular coil of area A rotates at frequency f in a uniform magnetic field. The peak value of the induced emf is ε.

A second single-turn rectangular coil rotates in the same magnetic field and has the same peak induced emf ε.

Which row shows the area and frequency of rotation of the second coil?

[1 mark]

	Area of coil	Frequency of rotation	
A	$4A$	$0.5f$	⬭
B	$2A$	$2f$	⬭
C	$2A$	$0.5f$	⬭
D	$0.25A$	$2f$	⬭

Do not write outside the box

1 9 The diagram shows three identical magnets **P**, **Q** and **R**.

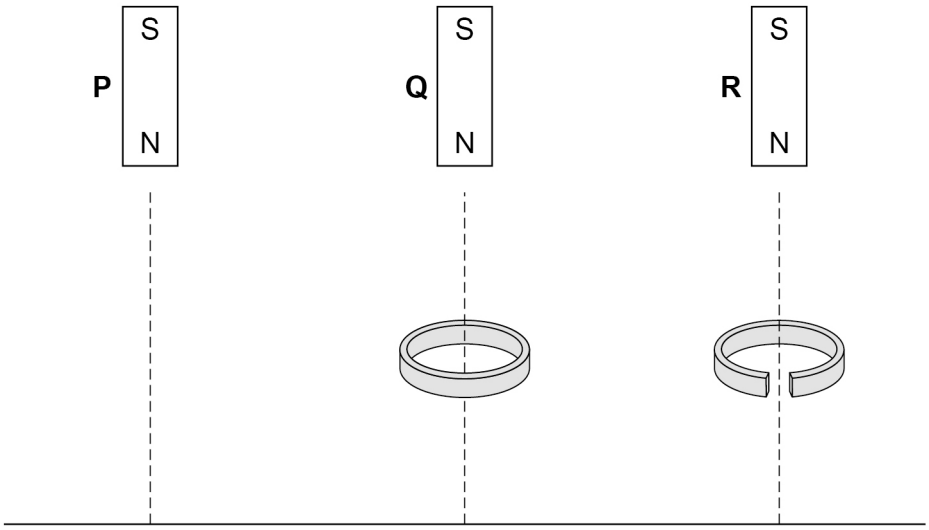

The magnets are released from the same height, at the same time, and fall to the ground.

P falls directly to the ground.
Q falls through the centre of a thick conducting ring.
R falls through an identical ring that has a gap cut in it.

Which gives the order that the magnets reach the ground?

[1 mark]

A **P** and **R** arrive at the same time, followed by **Q**.

B **P** and **Q** arrive at the same time, followed by **R**.

C **P** arrives first, followed by **Q** and then **R**.

D **P**, **Q** and **R** arrive at the same time.

2 0 An ac supply transfers energy to a resistor. An rms current of $8\ \mathrm{A}$ and a direct current I transfer energy at the same rate in the resistor.

What is I?

[1 mark]

A $2\sqrt{2}\ \mathrm{A}$

B $4\ \mathrm{A}$

C $4\sqrt{2}\ \mathrm{A}$

D $8\ \mathrm{A}$

Do not write outside the box

2 1 A transformer has 2000 turns on the primary coil and 900 turns on the secondary coil. A 230 V ac supply produces a current of 0.10 A in the primary coil. The current in the secondary coil is 0.21 A.

All of the flux produced by the primary coil links the secondary coil.

What is the efficiency of the transformer?

[1 mark]

A 45% ⬭

B 48% ⬭

C 95% ⬭

D 100% ⬭

2 2 A sinusoidal signal with an rms voltage of 80 V is connected across the inputs of an oscilloscope.
The y-gain of the oscilloscope is 40 V cm^{-1}.

What is the amplitude of the sinusoidal waveform displayed on the screen?

[1 mark]

A 1.4 cm ⬭

B 2.0 cm ⬭

C 2.8 cm ⬭

D 5.6 cm ⬭

15

END OF QUESTIONS

Do not write outside the box

There are no questions printed on this page

DO NOT WRITE ON THIS PAGE
ANSWER IN THE SPACES PROVIDED

Do not write outside the box

Question number	**Additional page, if required.** **Write the question numbers in the left-hand margin.**

Do not write outside the box

Question number	**Additional page, if required.** **Write the question numbers in the left-hand margin.**

Do not write outside the box

Question number	**Additional page, if required.** **Write the question numbers in the left-hand margin.**

Do not write outside the box

There are no questions printed on this page

DO NOT WRITE ON THIS PAGE
ANSWER IN THE SPACES PROVIDED

Copyright information

For confidentiality purposes, all acknowledgements of third-party copyright material are published in a separate booklet. This booklet is published after each live examination series and is available for free download from www.oxfordaqa.com

Permission to reproduce all copyright material has been applied for. In some cases, efforts to contact copyright-holders may have been unsuccessful and OxfordAQA will be happy to rectify any omissions of acknowledgements. If you have any queries please contact the Copyright Team.

Copyright © 2025 OxfordAQA International Examinations and its licensors. All rights reserved.