OXFORD AQA
INTERNATIONAL QUALIFICATIONS

Please write clearly in block capitals.

Centre number | | | | | | Candidate number | | | | |

Surname _____

Forename(s) _____

Candidate signature _____
I declare this is my own work.

INTERNATIONAL A-LEVEL
PHYSICS

Unit 5 Physics in practice

Thursday 13 June 2024 | 07:00 GMT | Time allowed: 2 hours

Materials
For this paper you must have:
- a Data and Formulae Booklet as a loose insert
- a ruler with millimetre measurements
- a scientific calculator, which you are expected to use where appropriate
- a protractor.

Instructions
- Use black ink or black ball-point pen.
- Fill in the boxes at the top of this page.
- Answer **all** questions.
- You must answer the questions in the spaces provided. Do not write outside the box around each page or on blank pages.
- All working must be shown.
- If you need extra space for your answer(s), use the lined pages at the end of this book. Write the question number against your answer(s).
- Do all rough work in this book. Cross through any work you do not want to be marked.

Information
- The marks for questions are shown in brackets.
- The maximum mark for this paper is 80.

For Examiner's Use	
Question	Mark
1	
2	
3	
4	
5	
6	
7	
TOTAL	

Do not write outside the box

Section A

Answer **all** questions in this section.

0 1 **Figure 1** shows a fixed mass of gas held in an insulated cylinder.

Figure 1

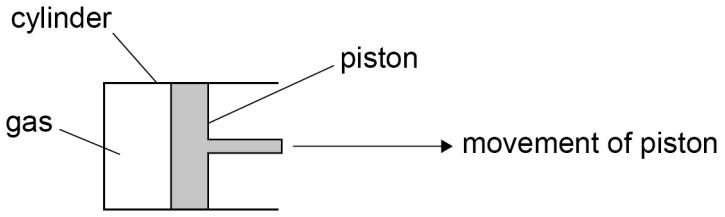

The volume V and the pressure P of the gas are measured as the gas is allowed to expand.

Table 1 shows derived values of $\ln(P / \text{Pa})$ and $\ln(V / \text{cm}^3)$.

Table 1

$\ln(P / \text{Pa})$	$\ln(V / \text{cm}^3)$
14.6	4.38
13.7	5.08
13.1	5.48
12.8	5.77
12.3	6.17

0 1 . 1 Plot, on **Figure 2**, a graph of $\ln(P / \text{Pa})$ against $\ln(V / \text{cm}^3)$.
Use the false origin provided.

[4 marks]

Do not write outside the box

Figure 2

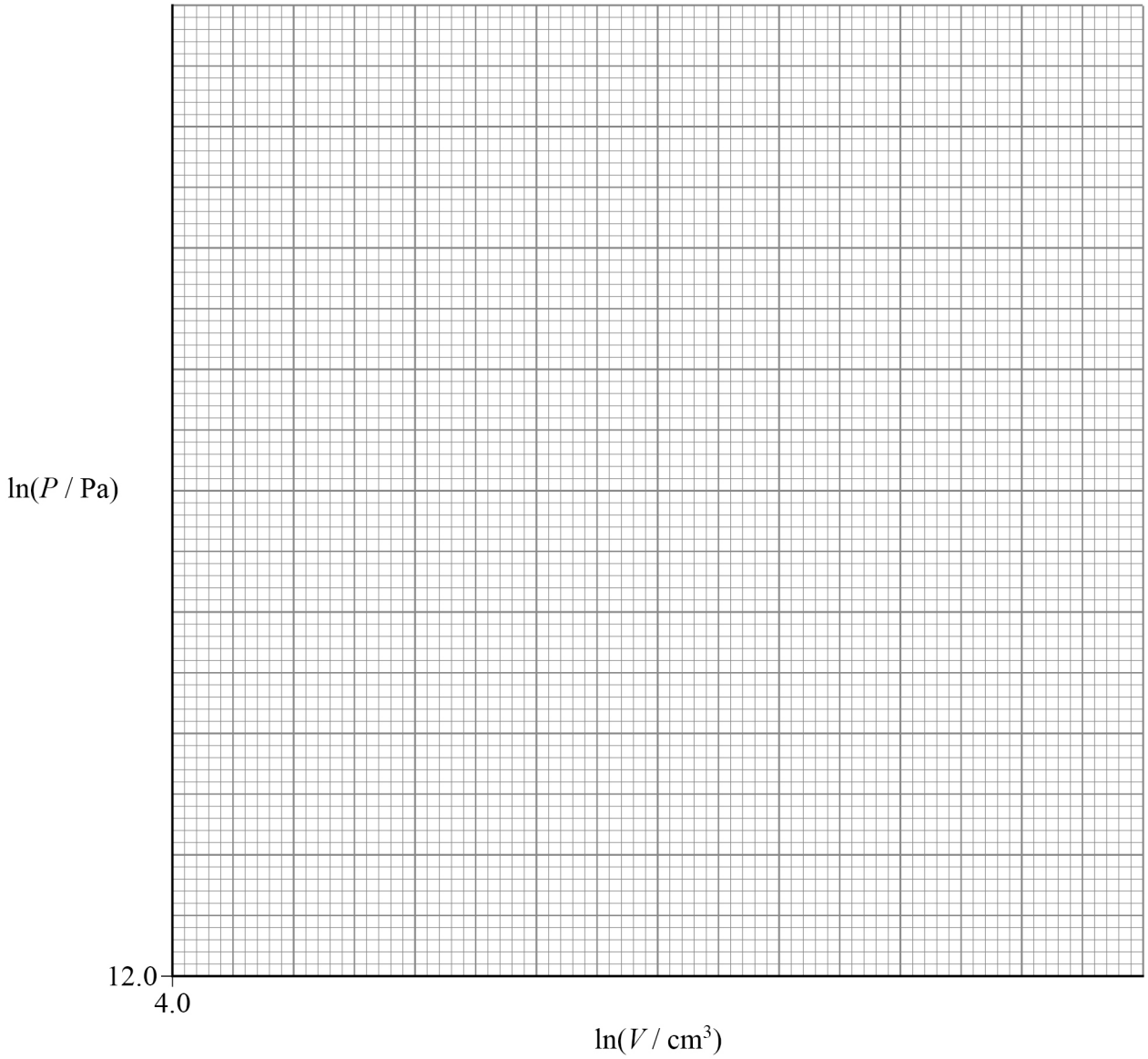

Question 1 continues on the next page

Do not write outside the box

0 1 . 2 Determine the gradient of the graph.

[2 marks]

gradient = _____

0 1 . 3 P and V are connected by the relationship:

$$PV^{\gamma} = k$$

where k and γ are constants.

Determine γ for this gas.

[2 marks]

γ = _____

8

Do not write outside the box

0 2 **Figure 3** shows apparatus used to determine the specific heat capacity c of a liquid.

Figure 3

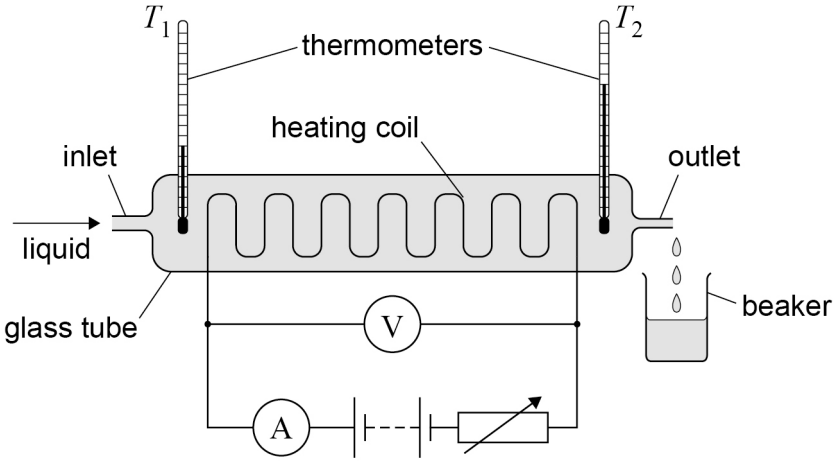

A liquid flows through a glass tube at a constant rate. The liquid is heated by a heating coil, then leaves the tube and is collected in a beaker. Before any measurements are taken, the heating coil is turned on until the temperatures shown by the thermometers become constant.

The initial temperature T_1 of the water at the inlet as it enters the tube and the final temperature T_2 of the water at the outlet as it leaves the tube are measured.
The voltage V_1 across the heating coil and the current I_1 in the coil are measured.
The mass m_1 of liquid collected in a time $t = 60$ s is measured.

The principle of conservation of energy leads to the equation:

$$V_1 I_1 t = m_1 c(T_2 - T_1) + Q$$

where Q is the energy transfer to the surroundings.

0 2 . 1 This equation does not include the energy used to change the temperature of the apparatus.

Explain why.

[1 mark]

_____

_____

_____

Question 2 continues on the next page

Do not write outside the box

The rate of flow of liquid is now changed. The experiment is repeated to eliminate Q from the calculation.
The voltage and current are adjusted so that T_1 and T_2 have the same values as they had in the first determination.
The new value V_2 of the voltage and the new value I_2 of the current are now measured.
The new mass m_2 of liquid collected in a time $t = 60$ s is measured.

0 2 . 2 Explain why Q is the same for both determinations.

[2 marks]

0 2 . 3 Show that c is given by:

$$c = \frac{(V_1 I_1 - V_2 I_2)t}{(m_1 - m_2)(T_2 - T_1)}$$

[2 marks]

Do not write outside the box

The data below are the measurements for the liquid.

$$V_1 I_1 - V_2 I_2 = 37.5\ (\pm 4\%)\ \text{W}$$
$$T_1 = 18.0\ (\pm 0.1)\ °\text{C}$$
$$T_2 = 23.6\ (\pm 0.1)\ °\text{C}$$
$$m_1 = 418\ (\pm 1)\ \text{g}$$
$$m_2 = 255\ (\pm 1)\ \text{g}$$
$$t = 60\ (\pm 1\%)\ \text{s}$$

0 2 . 4 State the absolute uncertainty in $(T_2 - T_1)$ and in $(m_1 - m_2)$.

[1 mark]

absolute uncertainty in $(T_2 - T_1)$ = _____

absolute uncertainty in $(m_1 - m_2)$ = _____

0 2 . 5 State the percentage uncertainty in $(T_2 - T_1)$ and in $(m_1 - m_2)$.

[1 mark]

percentage uncertainty in $(T_2 - T_1)$ = _____

percentage uncertainty in $(m_1 - m_2)$ = _____

Question 2 continues on the next page

Do not write outside the box

0 2 . 6 Calculate c in J g^{-1} K^{-1}.

[1 mark]

c = _____ J g^{-1} K^{-1}

0 2 . 7 Calculate the absolute uncertainty in the value for c.

[2 marks]

absolute uncertainty = _____ J g^{-1} K^{-1}

0 2 . 8 During the experiment, some liquid leaks from the apparatus at the inlet in **Figure 3**.

Explain whether this leak affects the calculated value for c.

[1 mark]

_____

_____

_____

11

Do not write outside the box

Turn over for the next question

DO NOT WRITE ON THIS PAGE
ANSWER IN THE SPACES PROVIDED

Do not write outside the box

0 3 A student investigates the relationship between the temperature θ of a thermistor and its resistance R. **Figure 4** shows some of the apparatus that he uses.

Figure 4

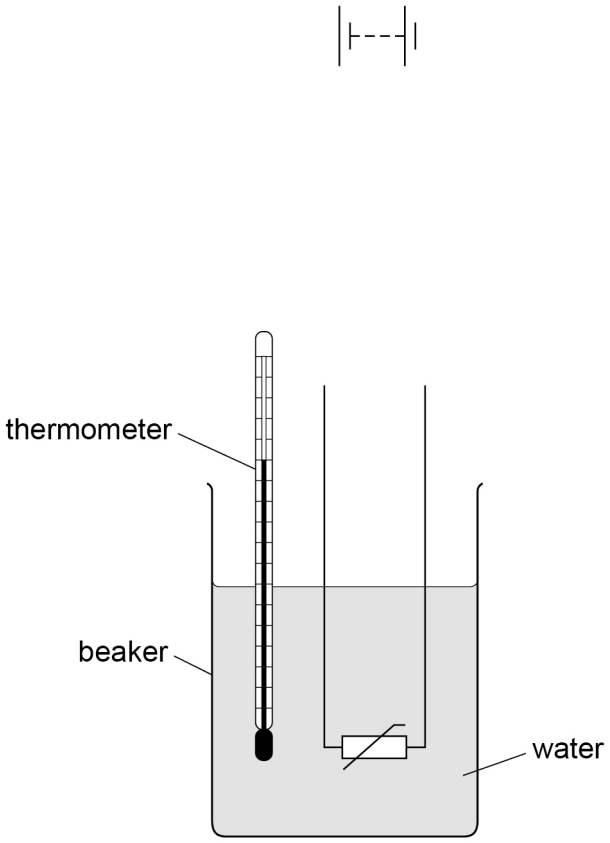

The student varies θ by changing the temperature of the water.
For each temperature he measures the current I in the thermistor and the potential difference V across the thermistor. He then calculates R.

0 3 . 1 The student wants I to be the same for each determination of R.
He needs to measure I and V.
He connects the thermistor to the battery using a potential divider that will allow him to adjust V.

Complete **Figure 4** to show how to connect the thermistor to the battery.
Include the additional components needed in your diagram.

[2 marks]

Do not write outside the box

Table 2 shows the student's values of θ and R.

Table 2

θ / °C	R / kΩ
20	12
40	5.0
60	3.5
80	2.0

The student believes that R is inversely proportional to the absolute temperature of the thermistor.

0 3 . 2 Suggest how to analyse these results to check whether or not the student is correct. You are not required to analyse the data.

[2 marks]

_____

_____

_____

_____

_____

0 3 . 3 Describe **two** ways in which the student could improve his data to help him decide whether his hypothesis is valid.

[2 marks]

1 _____

_____

_____

2 _____

_____

_____

6

Do not write outside the box

0 4 A student estimates the Planck constant h using the circuit shown in **Figure 5**. The student uses a variable power supply to change the voltage V across the LED.

Figure 5

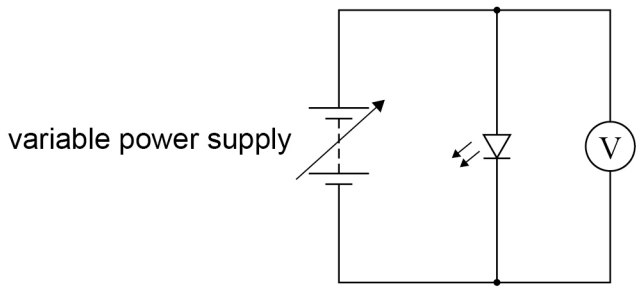

The student has six different LEDs. Each LED emits a different wavelength λ of light.

The pd across one LED is increased from zero. The student first notices that the LED is emitting light when the pd is V_1.

The pd across the LED is now decreased from a large value towards zero. The student first notices that the LED has stopped emitting light when the pd is V_2.

For each LED, the student records V_1 and V_2 and obtains λ from the LED manufacturer's data.

Table 3 shows V_1 and V_2 together with the manufacturer's value of λ and the value of $\frac{1}{\lambda}$ for all six LEDs.

Table 3

λ / nm	$\frac{1}{\lambda}$ / 10^6 m^{-1}	V_1 / V	V_2 / V
460	2.17	2.30	2.18
520	1.92	2.12	1.98
570	1.75	1.94	1.81
620	1.61	1.81	1.69
810	1.23	1.42	1.28
940	1.06	1.28	1.16

Do not write outside the box

Figure 6 shows, for the first five data sets, the variation with $\frac{1}{\lambda}$ of the values of V_1 and V_2.

V_1 and V_2 are shown as the ends of the error bars for each value of $\frac{1}{\lambda}$.

Figure 6

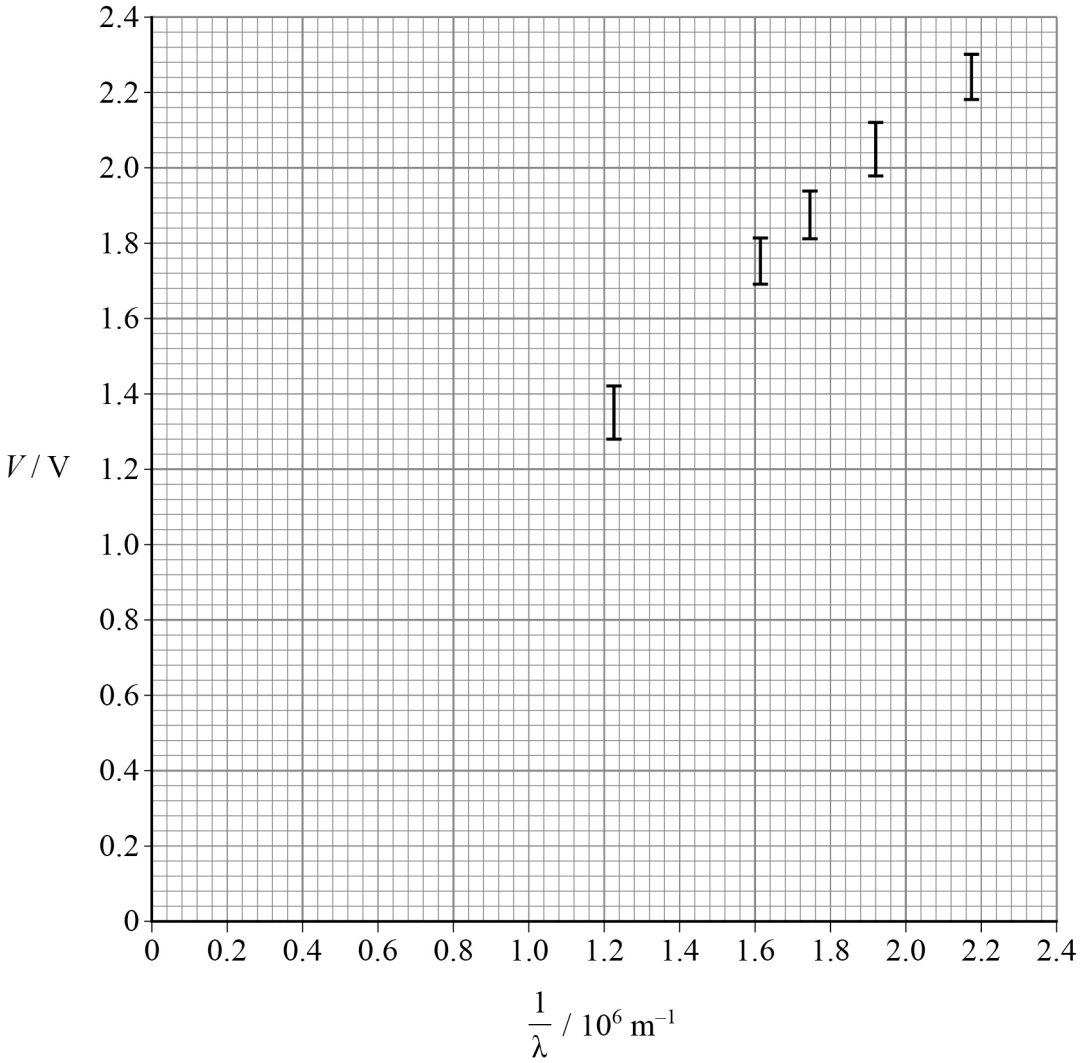

0 4 . 1 Plot, on **Figure 6**, the values for the final data set in **Table 3**, using an error bar for V.

[1 mark]

0 4 . 2 Draw the **two** best-fit lines that show the maximum and minimum gradients for the graph.

[1 mark]

Question 4 continues on the next page

Do not write outside the box

The student suggests that λ is related to V by:

$$\lambda = \frac{hc}{eV}$$

0 4 . 3 Calculate, using the gradients of your best-fit lines in **Figure 6**, a maximum value and a minimum value for the Planck constant h.

[4 marks]

maximum value of h = _____ J s

minimum value of h = _____ J s

0 4 . 4 Comment on the accuracy of the determination of h in Question **04.3**.

[3 marks]

_____

_____

_____

_____

_____

_____

_____

_____

Do not write outside the box

0 4 . 5 Suggest why, for each LED, V_1 is always greater than V_2.

[1 mark]

0 4 . 6 Suggest **one** practical way in which the student could improve the measurement of V_1 and V_2 in order to reduce the size of each error bar.

[1 mark]

11

END OF SECTION A

Do not write outside the box

Section B

Answer **all** questions in this section.

0 5 **Figure 7** shows a water-sprinkler system that distributes water to horizontal ground. Water under pressure enters the system and is pushed out of 24 identical jets arranged radially on the sprinkler.
The sprinkler is fixed in place with the jets at a vertical distance h above the ground. Only one of the jets is shown in **Figure 7**.

Figure 7

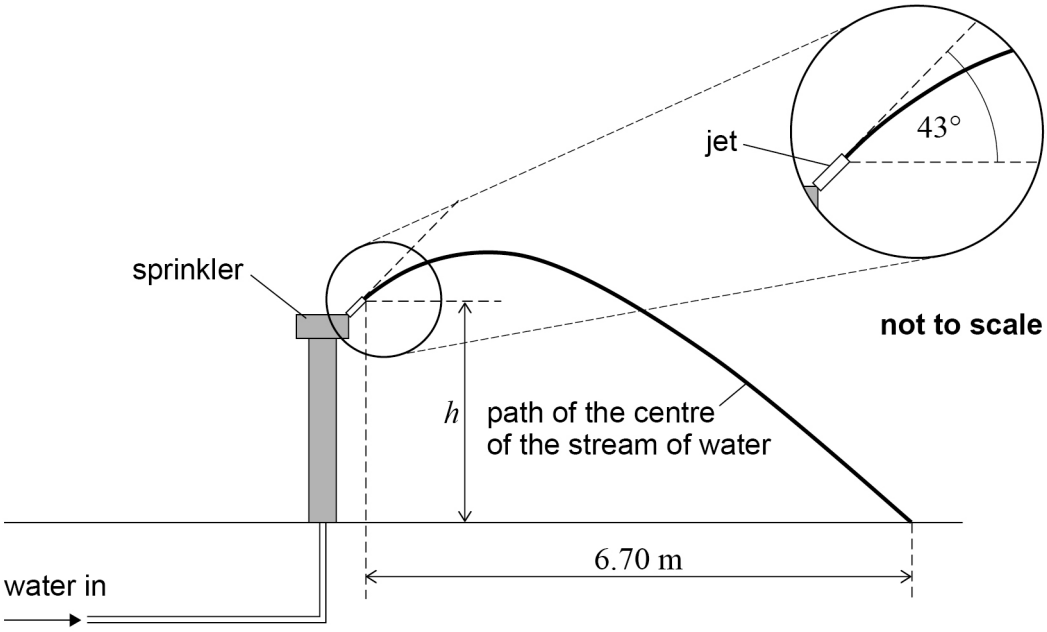

Water is emitted from the sprinkler at the rate of 1680 kg per hour.

density of water = 1.00×10^3 kg m^{-3}

0 5 . 1 The jets have circular cross-sections.
The radius of each jet is 8.82×10^{-4} m.

Show that the speed of the water as it emerges from a jet is approximately 8.0 m s^{-1}.

[3 marks]

Do not write outside the box

The jet shown in **Figure 7** is at an angle of $43°$ to the horizontal.
The centre of the stream of water reaches the ground at a horizontal distance of $6.70\ \mathrm{m}$ from the jet.

0 5 . 2 Calculate h.
Assume that air resistance is negligible.

[4 marks]

$h =$ _____ m

0 5 . 3 In practice, not all of the water leaving the jet has the same speed.

Explain why water from the jet travels a range of horizontal distances before reaching the ground.

[2 marks]

_____

_____

_____

_____

_____

_____

Question 5 continues on the next page

Do not write outside the box

Figure 8 is a view from above of a different water-sprinkler system. Only two of the 24 jets are shown.
Each jet is directed at an angle of 60° to the line joining the jet to the centre of the sprinkler, as shown in **Figure 8**.
Each jet is horizontal.

Figure 8

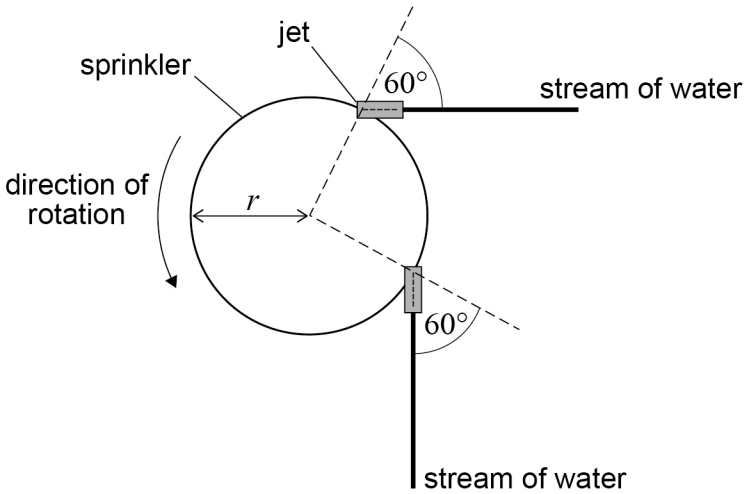

The water leaving each jet exerts a force $F = 0.24\ \text{N}$ on the sprinkler.
The total torque on the sprinkler arises from the force exerted by each of the 24 jets.

0 5 . 4 The average speed of water leaving each jet is $9.0\ \text{m s}^{-1}$.

Calculate the mass of water leaving the whole sprinkler in one second.

[3 marks]

mass in one second = _____ kg

0 5 . 5 The radius r of the sprinkler is $2.6 \times 10^{-2}\ \text{m}$.

Calculate the total torque exerted on the sprinkler by the 24 water jets.

[2 marks]

torque = _____ N m

14

Do not write outside the box

0 6 **Figure 9** shows a Van de Graaff generator. It stores a large positive charge on its metal dome.

Figure 9

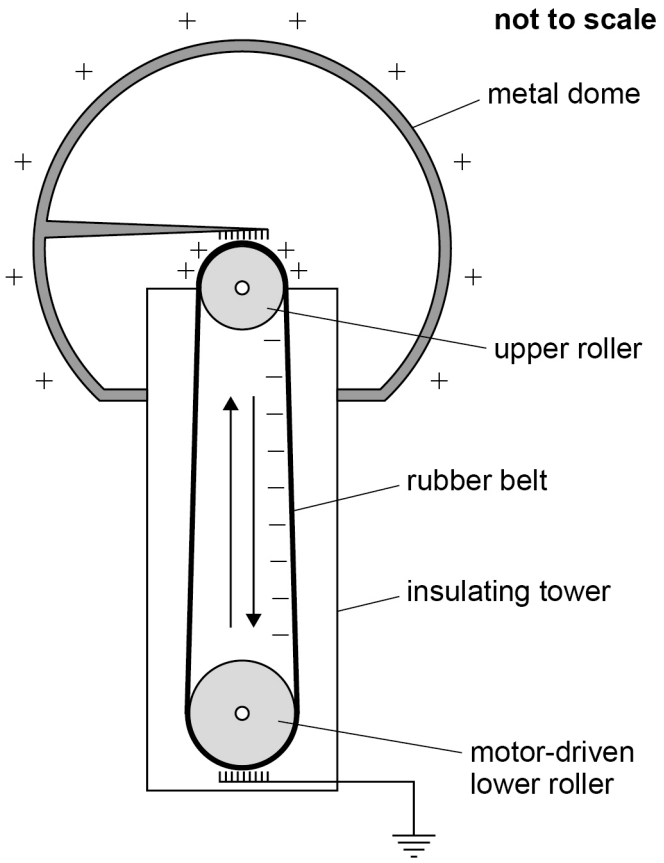

A motor drives the lower roller that drives the rubber belt. The belt carries electrons away from the metal dome.
The metal dome is left with a positive charge.

The belt does not slip on the rollers.
The motor makes the lower roller rotate at 1200 revolutions per minute.
The lower roller has a diameter of 4.2 cm.

0 6 . 1 Calculate the speed of the belt.

[2 marks]

speed = _____ $m\ s^{-1}$

Question 6 continues on the next page

Do not write outside the box

0 6 . 2 The upper roller has a period of rotation of 40 ms.

Calculate the circumference of the upper roller.

[1 mark]

circumference = _____ m

When the Van de Graaff generator is charged, the electric potential at the surface of its dome is 120 000 V.

The dome of the Van de Graaff generator acts as a capacitor that stores energy. Consider the dome to be a sphere of radius r.

0 6 . 3 Show that the capacitance of the dome is $4\pi\varepsilon_0 r$.

[2 marks]

0 6 . 4 The Van de Graaff generator is a machine that transfers energy.
Assume that the useful energy output of the Van de Graaff generator is equal to the energy stored in this capacitor.

The dome has a diameter of 35 cm. It takes approximately 5 s for the Van de Graaff generator to become fully charged.
The motor that drives the belt has a power rating of 48 W.

Estimate the percentage efficiency of the Van de Graaff generator as it is charging.

[3 marks]

percentage efficiency = _____

Do not write outside the box

0 6 . 5 When the Van de Graaff generator is placed in a vacuum and fully charged, it can be used to accelerate charged particles.

An ion with a specific charge of $+4.82 \times 10^{7}\ \mathrm{C\ kg^{-1}}$ is released from the dome.

Calculate the maximum possible speed of the ion.

[4 marks]

maximum speed = _____ $\mathrm{m\ s^{-1}}$

12

Turn over for the next question

Do not write outside the box

0 7 The two most common uranium isotopes in uranium deposits are U-235 and U-238. The percentages of U-235 and U-238 in deposits of ore are approximately the same all over the world but these percentages change with time.

Table 4 shows the percentages of atoms of U-235 and U-238 present in uranium deposits today and 1.7×10^9 years ago.

Table 4

Isotope	Percentage present today	Estimated percentage present 1.7×10^9 years ago
U-235	0.72	3.1
U-238	99.28	96.9

0 7 . 1 Show that the estimated percentages of U-235 and U-238 present 1.7×10^9 years ago are approximately consistent with the percentages present today.

decay constant for U-235 = 9.84×10^{-10} year^{-1}
decay constant for U-238 = 1.55×10^{-10} year^{-1}

[4 marks]

Do not write outside the box

The U-235 in a uranium deposit can lead to a nuclear reaction occurring naturally. Such a natural nuclear reactor operated in a uranium deposit about 1.7×10^9 years ago.

Evidence of this reactor is shown by:
- the presence in the uranium deposit of nuclides that are products of U-235 fission
- this uranium deposit having a smaller proportion of U-235 than deposits in other parts of the world.

0 7 . 2 Explain why the percentage of U-235 in a uranium deposit is an important factor in determining whether a chain reaction can occur.

[2 marks]

Water was able to penetrate the deposit and come into close contact with the U-235.

0 7 . 3 Explain why fission chain reactions could only be sustained when water was in close contact with the U-235.

[4 marks]

Question 7 continues on the next page

Do not write outside the box

The fission reactions occurred in start–stop cycles.

The fission reactions heated the water and turned it into high-pressure steam at temperatures of several hundred °C. The pressure of the steam forced the water away from the U-235 deposit, stopping the fission. As the rock cooled and the steam condensed, water re-entered the deposit and the fission cycle began again.

The duration of each cycle was a few hours from start to finish.

0 7 . 4 Suggest **one** property of the rock that would affect the duration of each start–stop cycle.

[1 mark]

_____

_____

0 7 . 5 Suggest **one** property of the water that would affect the duration of each start–stop cycle.

[1 mark]

_____

_____

0 7 . 6 The mean energy released from the fission of a U-235 nucleus is 211 MeV.

Show that an energy release of 211 MeV is equivalent to a change in mass defect of approximately 4×10^{-28} kg.

[2 marks]

Do not write outside the box

0 7 . 7 It is estimated that the total mass defect from all of the U-235 fissions was 4.6 kg during the lifetime of the natural reactor.

Calculate, in kg, the total mass of U-235 nuclei that underwent fission during the lifetime of the reactor.

molar mass of U-235 = 0.235 kg

[3 marks]

total mass of U-235 = _____ kg

0 7 . 8 One reason why the natural nuclear reactor stopped operating was because the percentage of U-235 in the deposit decreased.

Suggest **one** other reason why the reactor stopped operating.

[1 mark]

_____

_____

_____

18

END OF QUESTIONS

Do not write outside the box

There are no questions printed on this page

DO NOT WRITE ON THIS PAGE
ANSWER IN THE SPACES PROVIDED

Do not write outside the box

Question number	**Additional page, if required.** **Write the question numbers in the left-hand margin.**

Do not write outside the box

Question number	**Additional page, if required.** **Write the question numbers in the left-hand margin.**

Copyright information

For confidentiality purposes, all acknowledgements of third-party copyright material are published in a separate booklet. This booklet is published after each live examination series and is available for free download from www.oxfordaqa.com

Permission to reproduce all copyright material has been applied for. In some cases, efforts to contact copyright-holders may have been unsuccessful and OxfordAQA will be happy to rectify any omissions of acknowledgements. If you have any queries please contact the Copyright Team.

Copyright © 2024 OxfordAQA International Examinations and its licensors. All rights reserved.