OXFORD

INTERNATIONAL
AQA EXAMINATIONS

Please write clearly in block capitals.

Centre number | | | | | | Candidate number | | | | |

Surname _____

Forename(s) _____

Candidate signature _____
I declare this is my own work.

INTERNATIONAL A-LEVEL
PHYSICS

Unit 5 Physics in practice

Time allowed: 2 hours

Materials
For this paper you must have:
- a Data and Formulae Booklet as a loose insert
- a ruler with millimetre measurements
- a scientific calculator, which you are expected to use where appropriate
- a protractor.

Instructions
- Use black ink or black ball-point pen.
- Fill in the boxes at the top of this page.
- Answer **all** questions.
- You must answer the questions in the spaces provided. Do not write outside the box around each page or on blank pages.
- All working must be shown.
- If you need extra space for your answer(s), use the lined pages at the end of this book. Write the question number against your answer(s).
- Do all rough work in this book. Cross through any work you do not want to be marked.

Information
- The marks for questions are shown in brackets.
- The maximum mark for this paper is 80.

For Examiner's Use	
Question	Mark
1	
2	
3	
4	
5	
6	
7	
TOTAL	

Do not write outside the box

Section A

Answer **all** questions in this section.

0 1 **Figure 1** shows apparatus used in an experiment to investigate the energy transfers when a ball bounces on a horizontal surface.
The diagram shows the position of the ball when it is first released, and the ball at the top of its first bounce.
The ball is released from a height x.
The height y of the ball's first bounce is recorded.

Figure 1

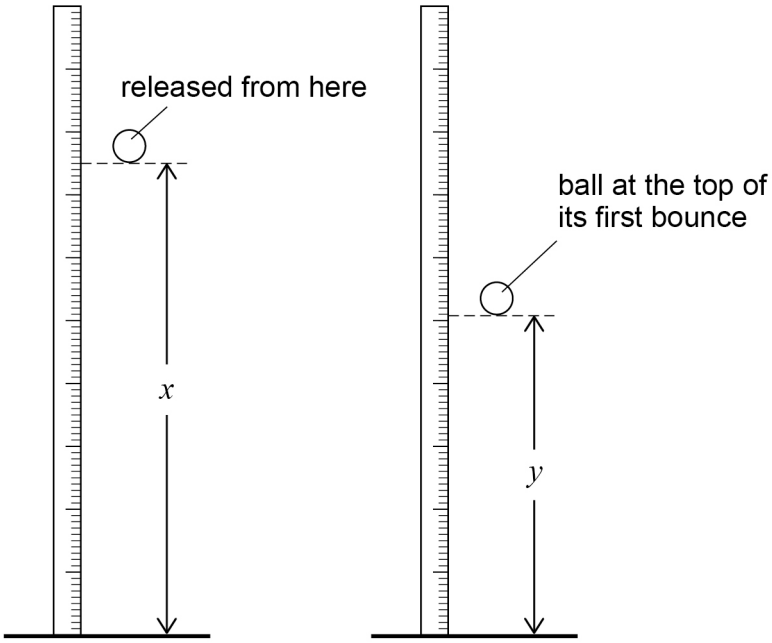

0 1 . 1 The ball is released five times from a height x of $750\ \text{mm} \pm 2\ \text{mm}$.
Height y is recorded each time.
Table 1 shows the measurements of y.

Table 1

***y* / mm**	505	490	485	510	495

Calculate the mean value y_{mean} for the data in **Table 1**.

[1 mark]

y_{mean} = _____ mm

Do not write outside the box

0 1 . 2 Calculate the absolute uncertainty in y_{mean}.

[1 mark]

absolute uncertainty in y_{mean} = _____ mm

The energy E lost by the ball during its collision with the surface is given by

$$E = mgh_d$$

where m is the mass of the ball and $h_d = x - y_{mean}$.

0 1 . 3 Calculate h_d and the absolute uncertainty in h_d.

[2 marks]

h_d = _____ mm

absolute uncertainty in h_d = _____ mm

0 1 . 4 Calculate E for $m = 2.5$ g.

State an appropriate unit for your answer.

[2 marks]

E = _____

unit _____

0 1 . 5 The absolute uncertainty in $m = \pm 0.1$ g.
The absolute uncertainty in the gravitational field strength is negligible.

Calculate the percentage uncertainty in E.

[2 marks]

percentage uncertainty in E = _____ %

8

Turn over ►

Do not write outside the box

There are no questions printed on this page

DO NOT WRITE ON THIS PAGE
ANSWER IN THE SPACES PROVIDED

Do not write outside the box

0 2 **Figure 2** shows apparatus used to investigate how the frictional force acting on a block varies with the mass M placed on the block.

Figure 2

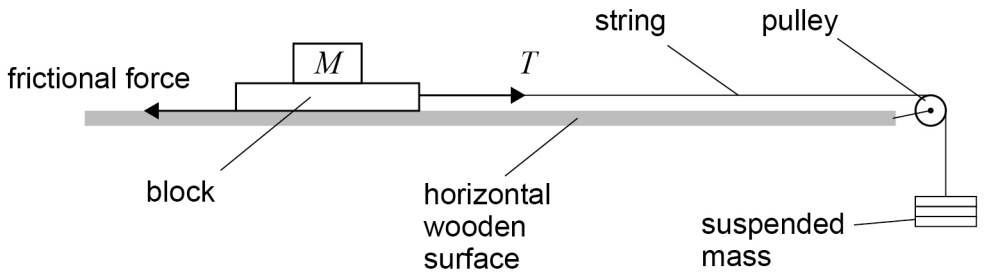

The suspended mass is increased in $50\ \mathrm{g}$ increments.
The largest mass that fails to move the block is noted.
The smallest mass that does move the block is noted.
The value of m, the minimum suspended mass that is needed to move the block, must lie within this $50\ \mathrm{g}$ range.

The experiment is repeated for a range of values of M. The $50\ \mathrm{g}$ range within which m lies is recorded for each value of M.

Question 2 continues on the next page

Do not write outside the box

0 2 . 1 **Figure 3** shows data for m and M.
The error bars indicate the uncertainty in the value of m.

Draw **two** straight lines on **Figure 3** with the maximum and minimum gradients that are consistent with the error bars.

[1 mark]

Figure 3

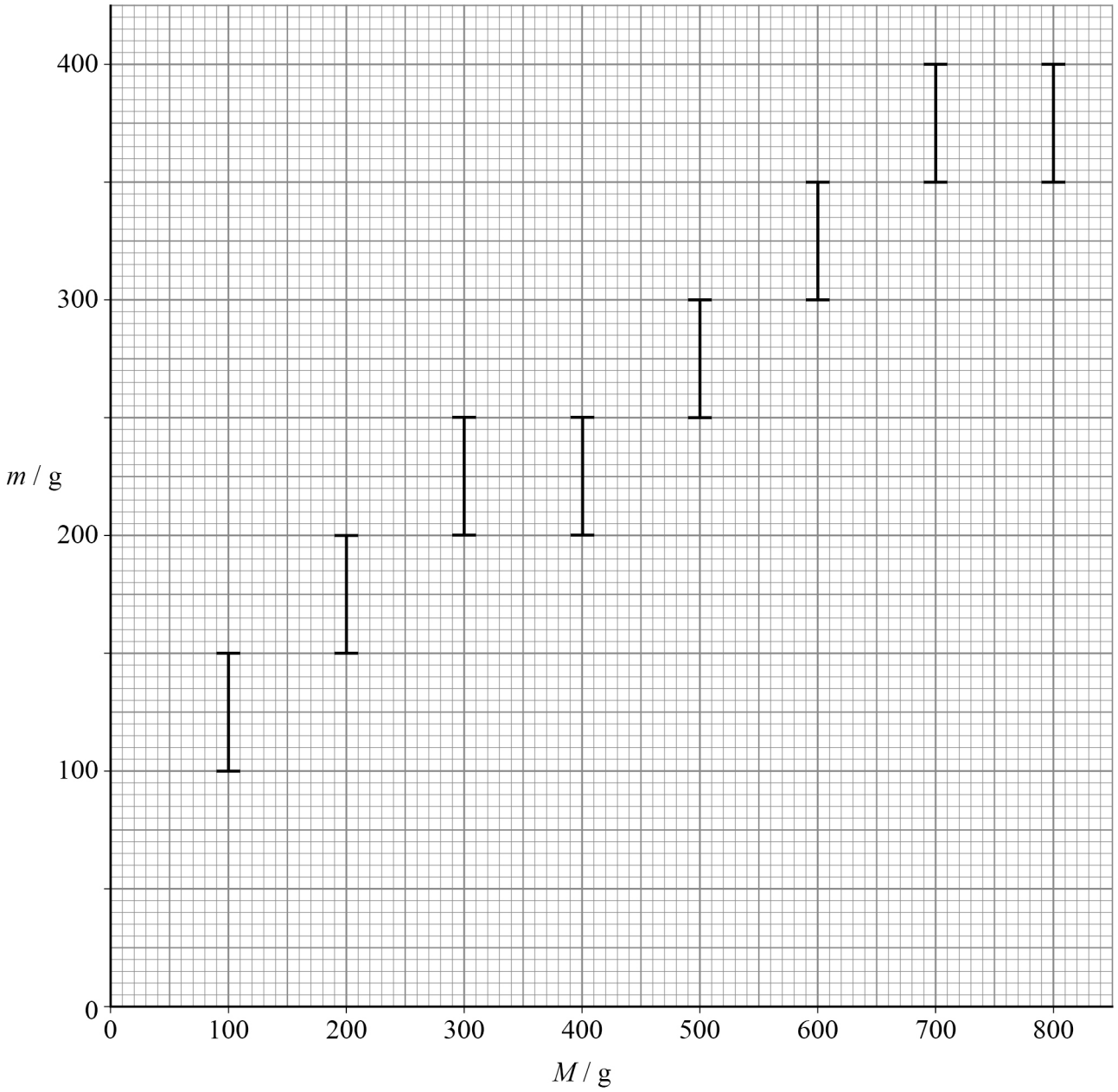

Do not write outside the box

0 2 . 2 Determine the gradients of both your lines.

[3 marks]

maximum gradient = _____

minimum gradient = _____

0 2 . 3 The relationship between m and M is given by:

$$m = \mu(M + M_b)$$

where M_b is the mass of the block and μ is a constant.
The pulley is assumed to be frictionless.

Determine maximum and minimum possible values for M_b.

[4 marks]

maximum possible value of M_b = _____ g

minimum possible value of M_b = _____ g

8

Turn over ►

Do not write outside the box

0 3 **Figure 4** shows a transformer in a circuit with an ac power supply.

Figure 4

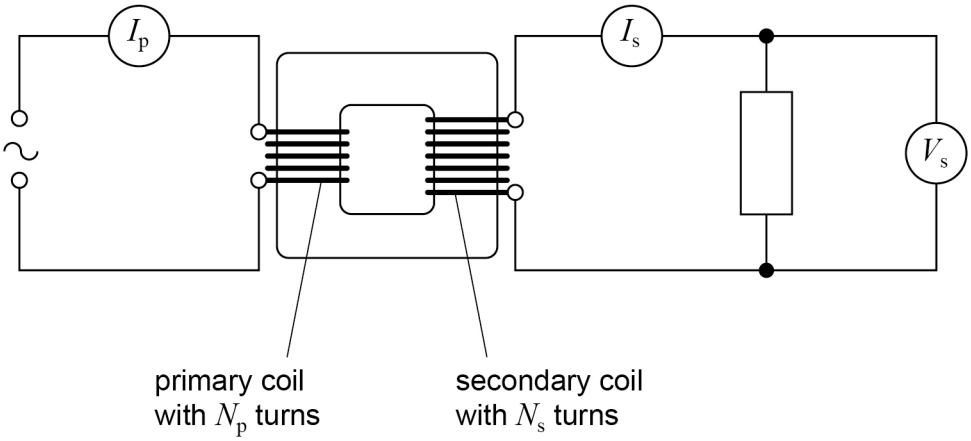

The turns ratio of the transformer is $\frac{N_s}{N_p}$.

The apparatus was used to investigate the relationship between the turns ratio and the output voltage V_s.
The primary current I_p and the secondary current I_s were also measured.

In one experiment, the input voltage V_p was kept constant and a primary coil with 100 turns was used.
Table 2 shows the results from this experiment.

Table 2

N_s / turns	I_p / mA	I_s / mA	V_s / V
50	0.55	1.06	3.13
150	5.06	3.23	9.47
200	8.88	4.19	12.57

Do not write outside the box

0 3 . 1 Determine, using the turns ratio, a reliable estimate for V_p.

[2 marks]

V_p = _____ V

0 3 . 2 Calculate the efficiency of the transformer for a turns ratio of 2

[2 marks]

efficiency = _____

Question 3 continues on the next page

Do not write outside the box

0 3 . 3 It is suggested that the efficiency of a transformer varies with the input voltage V_p.

Describe an experiment to test the relationship between the efficiency of the transformer and V_p.

Your answer should include:

- any apparatus needed in addition to the apparatus shown in **Figure 4**
- the measurements that you would take
- details of the procedure you would follow
- details of how you would present and interpret your results.

[5 marks]

9

Do not write outside the box

0 4 Boyle's law states that for a fixed mass of gas at constant temperature

$$pV = k$$

where p is the gas pressure, V is the gas volume and k is a constant.

0 4 . 1 Show that

$$\ln V = \ln k - \ln p$$

[1 mark]

Question 4 continues on the next page

Do not write outside the box

Table 3 shows results from an experiment to measure V and p for a fixed mass of gas over a range of pressures.

Table 3

p / kPa	V / cm^3	ln (p / kPa)	ln (V / cm^3)
70	88	4.25	
85	73	4.44	
100	62	4.61	
120	52	4.79	
140	45	4.94	

0 4 . 2 Complete **Table 3** by finding the values for $\ln(V / \text{cm}^3)$.

[1 mark]

0 4 . 3 Draw, on **Figure 5**, a graph of $\ln(V / \text{cm}^3)$ against $\ln(p / \text{kPa})$.
Draw a best fit line.

[4 marks]

Do not write outside the box

Figure 5

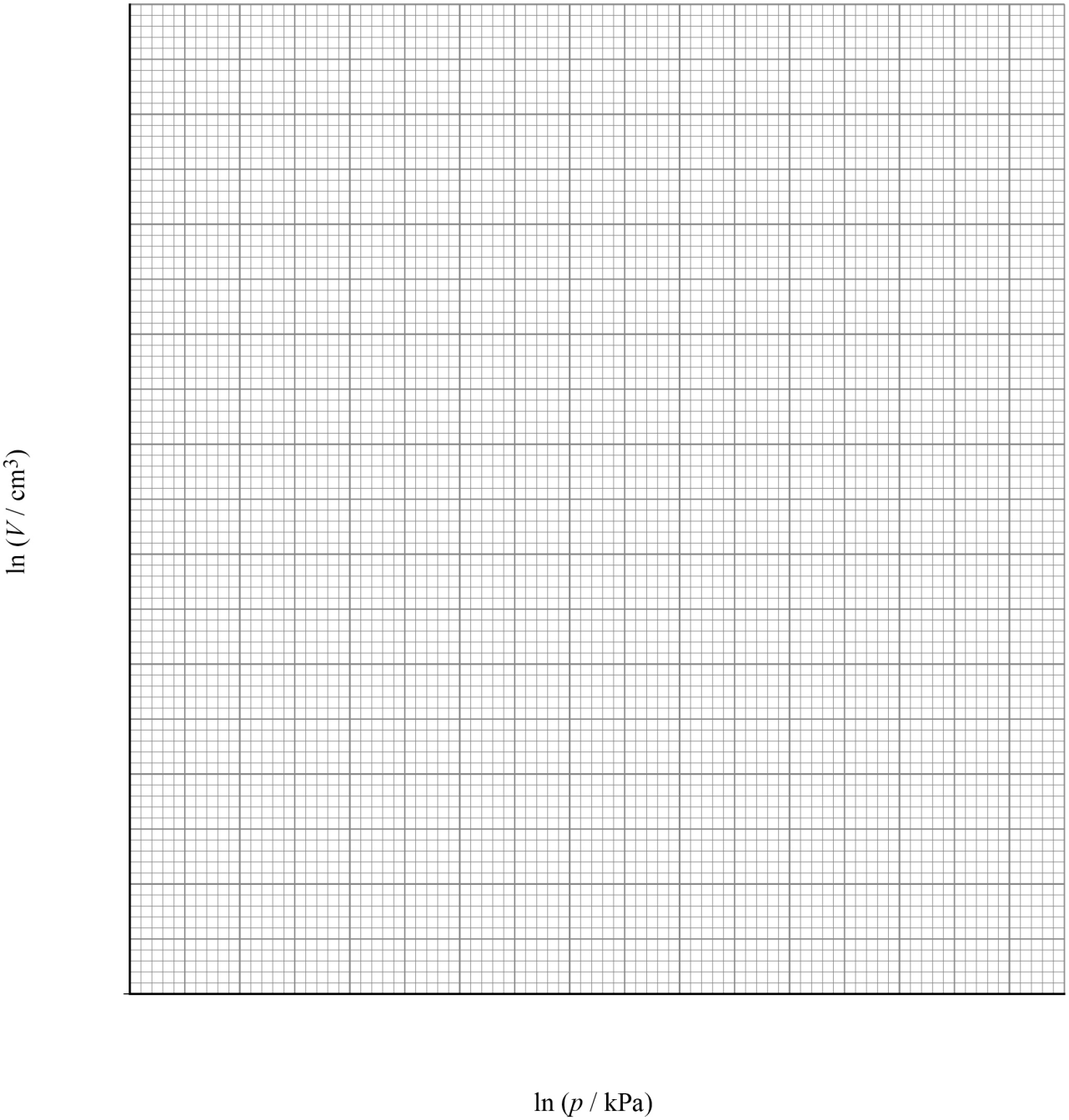

Question 4 continues on the next page

Do not write outside the box

0 4 . 4 Deduce whether or not your graph in **Figure 5** supports Boyle's law.

[2 marks]

_____

_____

0 4 . 5 Determine, in J, the value of k.

[3 marks]

$k =$ _____ J

11

END OF SECTION A

Do not write outside the box

Section B

Answer **all** questions in this section.

0 5 **Figure 6** shows the basic structure of an X-ray tube.

Figure 6

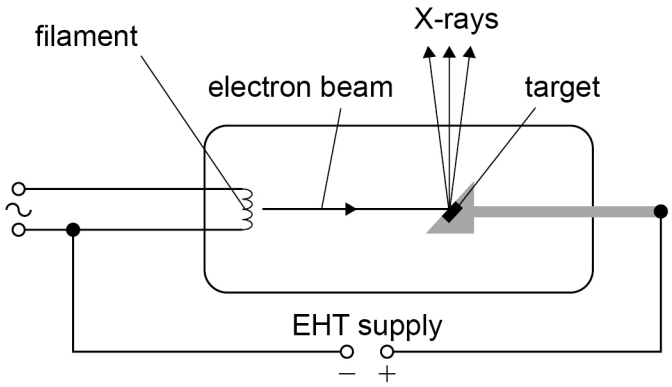

The X-ray tube has a potential difference (pd) of $66\ \mathrm{kV}$ between the filament and the target.
The current in the electron beam is $140\ \mathrm{mA}$.
The tube converts 98.5% of the energy input into heating the target. The remaining energy is used to emit X-rays.
The target is made from a material with a specific heat capacity of $134\ \mathrm{J\ kg^{-1}\ K^{-1}}$ and has a mass of $0.28\ \mathrm{kg}$.

0 5 . 1 Calculate the minimum wavelength of X-rays produced by the tube.

[3 marks]

minimum wavelength = _____ m

Question 5 continues on the next page

Do not write outside the box

0 5 . 2 Show that the power of the X-ray beam is approximately 140 W.

[2 marks]

0 5 . 3 Calculate the initial rate of increase of temperature of the target when the X-ray tube is turned on.

[2 marks]

initial rate of increase of temperature = _____ $K\ s^{-1}$

0 5 . 4 The initial rate of increase of temperature of the target is affected by changing the magnitude of the pd between the filament and the target.

Explain, with reference to the electrons in the electron beam, the effect of **increasing** the pd.

[1 mark]

_____

_____

_____

_____

Do not write outside the box

0 5 . 5 The initial rate of increase of temperature of the target is affected by changing the magnitude of the filament current.

Explain, with reference to the electrons in the electron beam, the effect of **increasing** the filament current.

[1 mark]

0 5 . 6 The filament in the X-ray tube has a temperature of approximately 2400 °C when the X-ray tube is operating.

Discuss the energy transfers that occur at the filament when the X-ray tube is operating.

[3 marks]

12

Do not write outside the box

0 6 This question is about the toughness of materials. A tough material is one that can absorb a lot of energy and deform before breaking.
One way of measuring toughness is to determine the amount of energy per unit volume that a material can absorb before breaking.

0 6 . 1 **Figure 7** shows a graph of stress σ against strain ε for a material.
σ_b and ε_b are the stress and the strain at the breaking point.

Figure 7

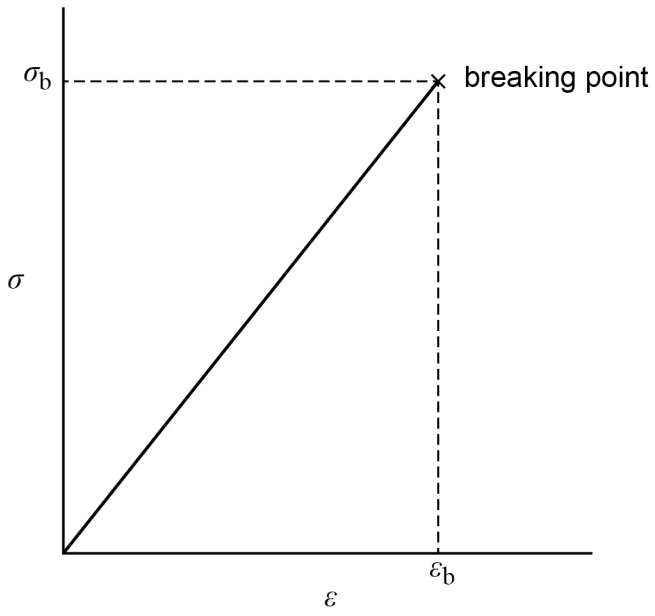

Show that the area under the stress–strain graph in **Figure 7** is equivalent to the energy per unit volume absorbed by the material.

[3 marks]

Do not write outside the box

Figure 8 shows a stress–strain curve for a metal. The breaking strain is 0.4

Figure 8

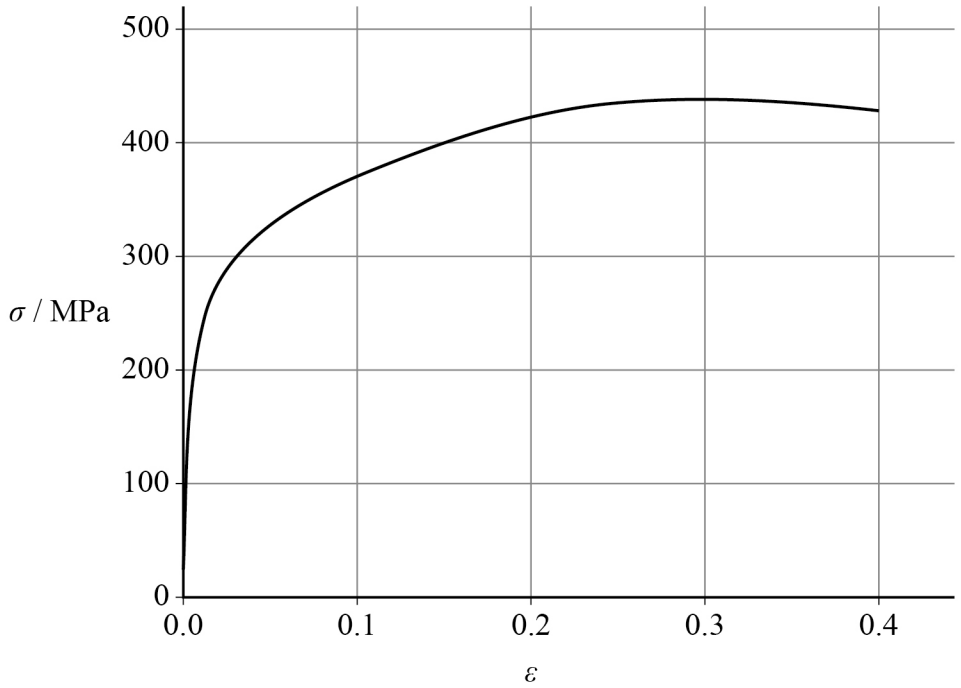

0 6 . 2 Explain what is meant by a breaking strain of 0.4

[1 mark]

_____

_____

_____

0 6 . 3 Estimate the toughness of the metal.

[2 marks]

toughness = _____ $J\ m^{-3}$

Question 6 continues on the next page

Do not write outside the box

0 6 . 4 **Figures 9A**, **9B** and **9C** show a different way of comparing the toughness of materials.

Figure 9A **Figure 9B** **Figure 9C**

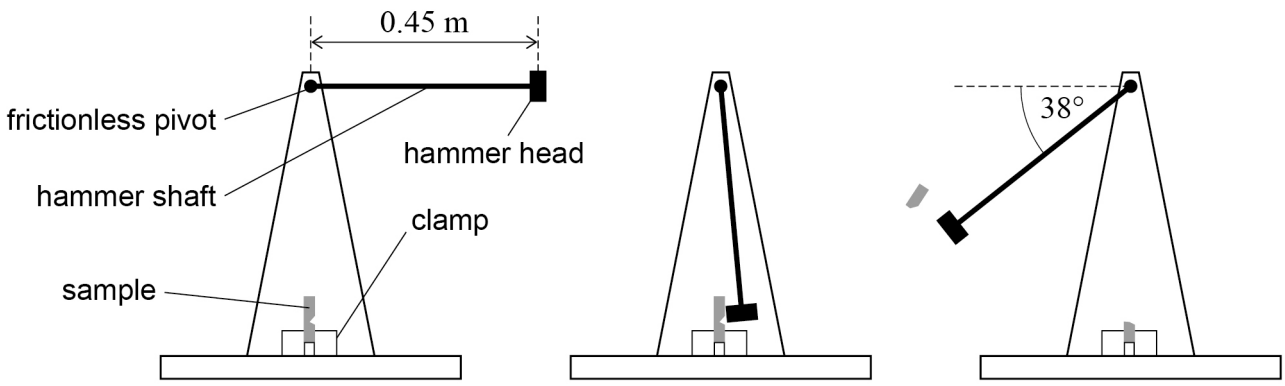

In **Figure 9A**, a sample of a material is placed in a clamp. A pivoted hammer is held in a stationary, horizontal position.

In **Figure 9B**, the hammer is released and swings down to hit the sample.

In **Figure 9C**, the hammer breaks the sample and swings to a new maximum height having transferred energy to the sample. In this case, the hammer swings to an angle of $38°$ to the horizontal.

The hammer head has a mass of $2.5\ \text{kg}$ and its centre of mass is $0.45\ \text{m}$ from the pivot.

Ignore air resistance and the mass of the hammer shaft.

Show that the speed of the hammer head as it reaches the sample is approximately $3.0\ \text{m s}^{-1}$.

[2 marks]

Do not write outside the box

0 6 . 5 Calculate the energy absorbed by the sample in the collision with the hammer head.

[3 marks]

energy absorbed = _____ J

0 6 . 6 The hammer head experiences an impulse of 2.8 N s due to its collision with the sample.

Calculate the momentum of the hammer head immediately after the collision.

[2 marks]

momentum = _____ kg m s^{-1}

0 6 . 7 Compare the impulse experienced by the hammer head with the impulse experienced by the broken piece of the sample in this collision.

[2 marks]

_____

_____

_____

_____

_____

_____

15

Do not write outside the box

0 7 A ship has a radar system to detect other ships nearby.
Figure 10 shows a radar antenna. The antenna rotates about its axis of rotation and emits electromagnetic waves.
The radar system is switched on and the antenna accelerates uniformly from rest to its maximum angular speed. It reaches its maximum angular speed after accelerating for one quarter of a turn. It then remains at this angular speed.
The antenna behaves like a uniform rod rotating about its centre of mass. Its moment of inertia is $0.92\ \text{kg m}^2$.

Figure 10

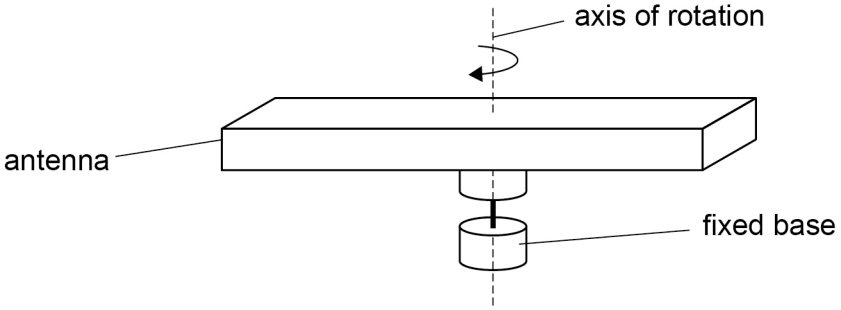

0 7 . 1 The antenna has a maximum angular speed of $4.2\ \text{rad s}^{-1}$.

Calculate its period of rotation.

[1 mark]

period of rotation = _____ s

0 7 . 2 Show that the average angular acceleration of the antenna during its first quarter turn is approximately $5.6\ \text{rad s}^{-2}$.

[3 marks]

Do not write outside the box

0 7 . 3 Calculate the torque applied to the antenna while it is accelerating.
Resistive torques are negligible.

[1 mark]

torque = _____ N m

0 7 . 4 The antenna emits electromagnetic waves with an average power of $10\ \mathrm{kW}$.
The angular acceleration of the antenna takes $0.748\ \mathrm{s}$.

Show that the power required to accelerate the antenna is insignificant compared with the power of the emitted electromagnetic waves.

[3 marks]

_____

_____

0 7 . 5 Determine, in $\mathrm{W\ m^{-2}}$, the average intensity of the electromagnetic waves at a distance $15\ \mathrm{km}$ from the antenna.

[2 marks]

average intensity = _____ $\mathrm{W\ m^{-2}}$

Question 7 continues on the next page

Do not write outside the box

The ship has two radar antennas **X** and **Y** as shown in **Figure 11**. They rotate at the same angular speed and emit electromagnetic waves of wavelength $10\ \text{cm}$.

The antennas behave like uniform rods rotating about their centres of mass.

Figure 11

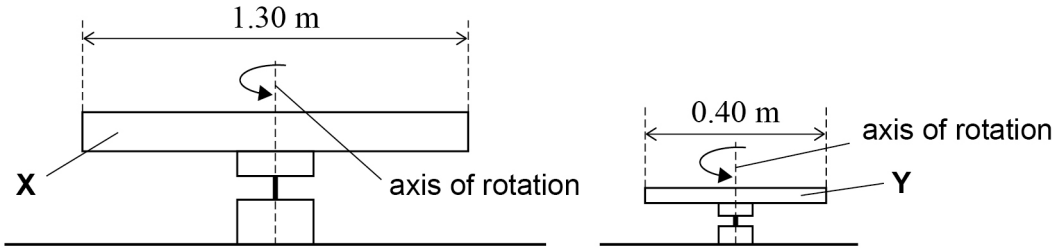

X has a length of $1.30\ \text{m}$, a mass of $6.5\ \text{kg}$ and a moment of inertia of $0.92\ \text{kg m}^2$.
Y has a length of $0.40\ \text{m}$ and a mass of $1.9\ \text{kg}$.
The mass is distributed in the same way in each antenna.

0 7 . 6 Calculate the moment of inertia of antenna **Y**.

[3 marks]

moment of inertia = _____ kg m^2

Do not write outside the box

0 7 . 7 Explain why interference is possible between waves from the two antennas.

[2 marks]

_____

_____

_____

_____

0 7 . 8 A second ship is $15\ \mathrm{km}$ away from the antennas.
The two antennas are separated by a distance of $8.4\ \mathrm{m}$.

Calculate the fringe separation at the position of the second ship.

[2 marks]

fringe separation = _____ m

17

END OF QUESTIONS

Do not write outside the box

There are no questions printed on this page

DO NOT WRITE ON THIS PAGE
ANSWER IN THE SPACES PROVIDED

Do not write outside the box

Question number	**Additional page, if required.** **Write the question numbers in the left-hand margin.**

Do not write outside the box

Question number	**Additional page, if required.** **Write the question numbers in the left-hand margin.**

Copyright information

For confidentiality purposes, all acknowledgements of third-party copyright material are published in a separate booklet. This booklet is published after each live examination series and is available for free download from www.oxfordaqaexams.org.uk.

Permission to reproduce all copyright material has been applied for. In some cases, efforts to contact copyright-holders may have been unsuccessful and Oxford International AQA Examinations will be happy to rectify any omissions of acknowledgements. If you have any queries please contact the Copyright Team.

Copyright © 2022 Oxford International AQA Examinations and its licensors. All rights reserved.