OXFORD

INTERNATIONAL
AQA EXAMINATIONS

Please write clearly in block capitals.

Centre number | | | | | | Candidate number | | | | |

Surname _____

Forename(s) _____

Candidate signature _____
I declare this is my own work.

INTERNATIONAL A-LEVEL
PHYSICS

Unit 4 Energy and Energy resources

Time allowed: 2 hours

Materials
For this paper you must have:
- a Data and Formulae Booklet as a loose insert
- a ruler with millimetre measurements
- a scientific calculator, which you are expected to use where appropriate
- a protractor.

Instructions
- Use black ink or black ball-point pen.
- Fill in the boxes at the top of this page.
- Answer **all** questions.
- You must answer the questions in the spaces provided. Do not write outside the box around each page or on blank pages.
- All working must be shown.
- If you need extra space for your answer(s), use the lined pages at the end of this book. Write the question number against your answer(s).
- Do all rough work in this book. Cross through any work you do not want to be marked.

Information
- The marks for questions are shown in brackets.
- The maximum mark for this paper is 80.

For Examiner's Use	
Question	Mark
1	
2	
3	
4	
5	
6	
7–21	
TOTAL	

Do not write outside the box

Section A

Answer **all** questions in this section.

0 1 **Figure 1** shows a boiling tube containing melted wax at 85 °C. The boiling tube is in a beaker of cold water.

Figure 1

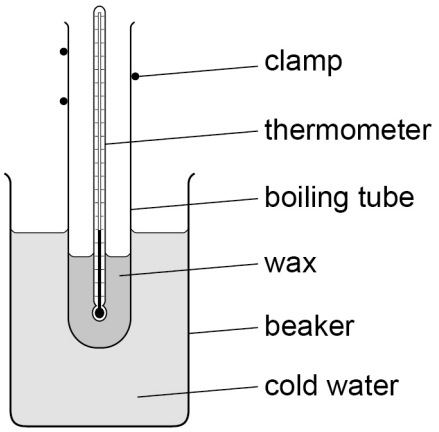

The temperature of the wax is recorded every minute for 16 minutes.
Figure 2 shows the results.

Figure 2

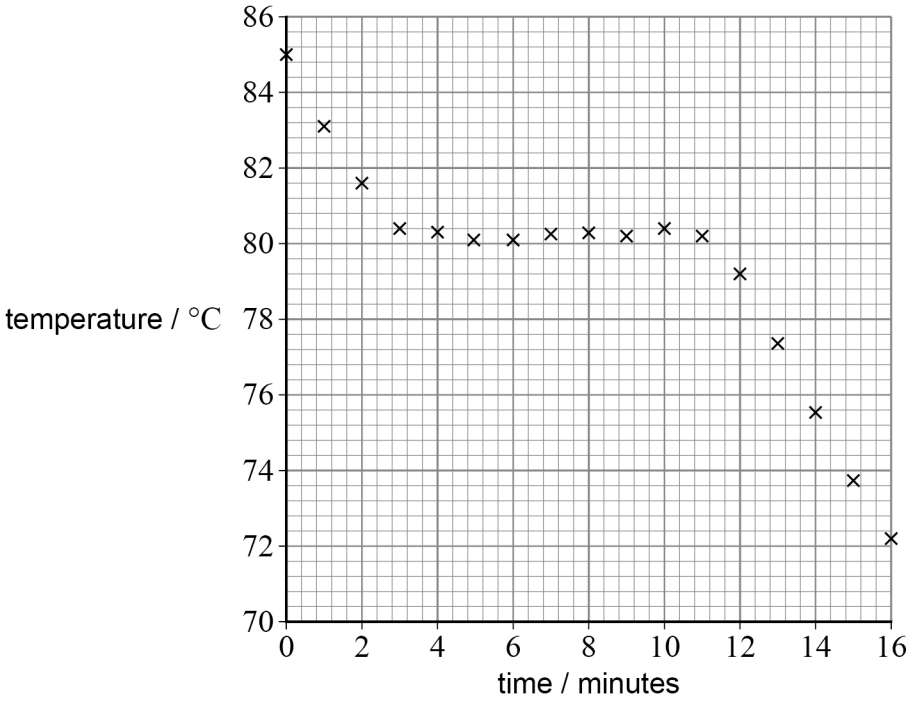

Do not write outside the box

0 1 . 1 Estimate, using **Figure 2**, the melting point of the wax.

[1 mark]

melting point = _____ °C

0 1 . 2 The internal energy of the wax decreases at an average rate of $7.8\ \mathrm{J\ s^{-1}}$ during the time the wax changes state.

Estimate the mass of wax in the boiling tube.

specific latent heat of the wax = $1.5 \times 10^5\ \mathrm{J\ kg^{-1}}$

[3 marks]

mass = _____ kg

0 1 . 3 Describe how the average kinetic energy and the average potential energy of the wax particles change between 8 and 16 minutes.

[2 marks]

_____

_____

_____

_____

_____

_____

_____

_____

6

Do not write outside the box

0 2 . 1 The volume of a fixed mass of gas is kept constant.

Explain why the pressure of the gas decreases when the temperature is decreased.

[3 marks]

0 2 . 2 Show that the pressure p of an ideal gas can be given as

$$p = \frac{\rho R T}{M}$$

where ρ is the density, T is the absolute temperature and M is the molar mass of the gas.

[2 marks]

Do not write outside the box

0 2 . 3 **Figure 3** shows the variation of pressure with temperature for a gas at a constant volume.

Figure 3

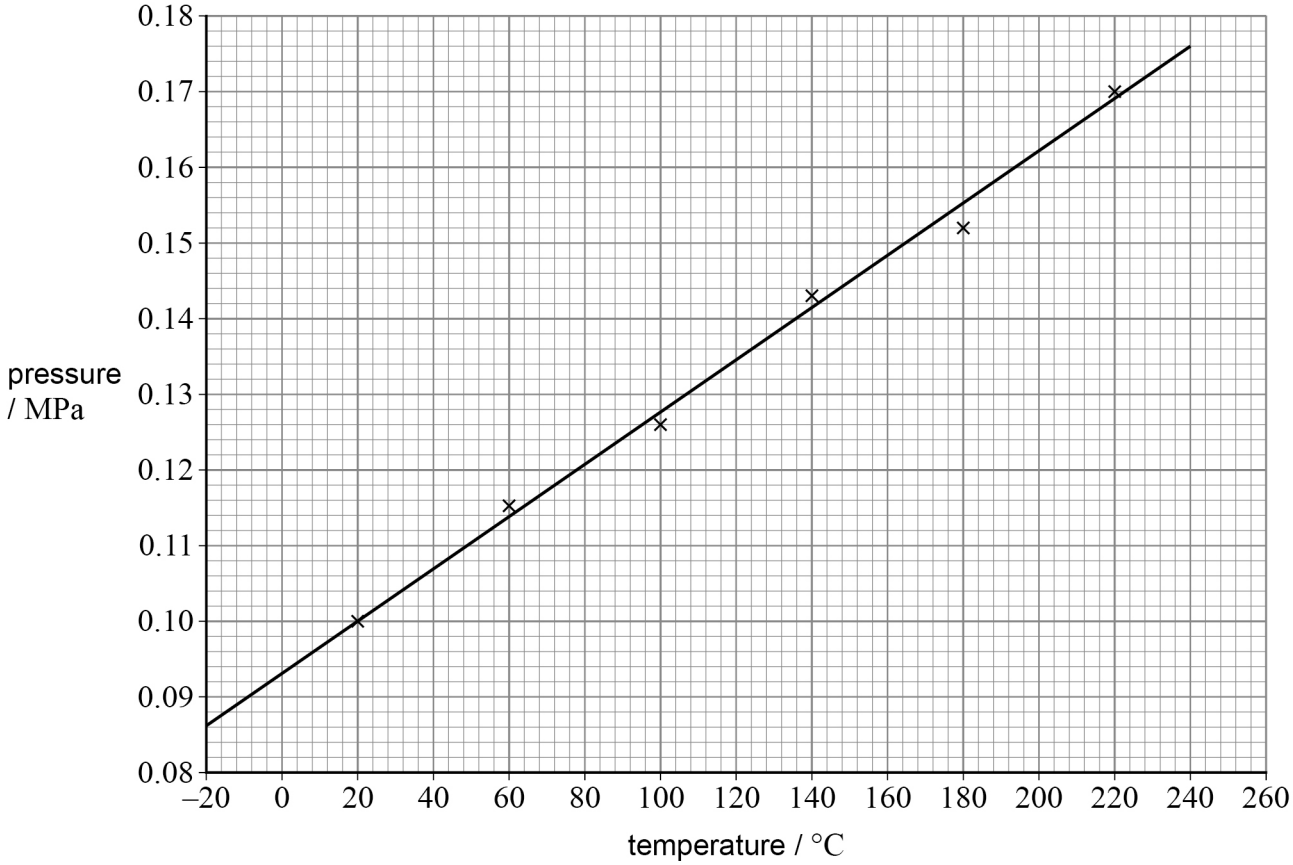

The density of the gas is $1.6\ \text{kg m}^{-3}$.
Assume that the gas is ideal.

Determine, in kg mol^{-1}, the molar mass of the gas.

[4 marks]

molar mass = _____ kg mol^{-1}

9

Turn over ►

Do not write outside the box

0 3 A flywheel energy storage system (FESS) stores kinetic energy in a rotating mass.

0 3 . 1 The flywheel in one FESS rotates at 1.4×10^4 revolutions per minute.

Show that the angular speed of the flywheel is approximately 1.5×10^3 rad s^{-1}.

[1 mark]

0 3 . 2 The flywheel has a moment of inertia of 92 kg m^2.

Show that the rotational kinetic energy stored by the flywheel is approximately 100 MJ.

[2 marks]

0 3 . 3 The flywheel connects to a generator. The generator exerts a constant resistive torque of 120 N m on the flywheel for 4.0 minutes.

Calculate the angular speed of the flywheel after 4.0 minutes.

[3 marks]

angular speed = _____ rad s^{-1}

Do not write outside the box

0 3 . 4 The flywheel in one FESS is a solid steel cylinder, as shown in **Figure 4**.

Figure 4

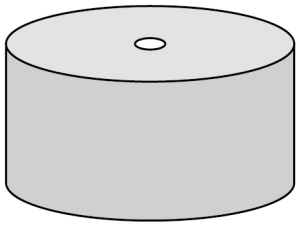

The maximum energy that can be safely stored in a FESS is limited by the material properties of the flywheel.
Designers consider replacing the steel flywheel with one of identical dimensions made of carbon fibre. Data about each material are shown in **Table 1**.

Table 1

Material	Breaking stress / GPa	Density / kg m^{-3}
steel	1.5	8.0×10^3
carbon fibre	4.5	1.6×10^3

Each design is required to store the same amount of rotational kinetic energy.

Suggest why the designers need to consider these densities and breaking stresses when choosing a material for the flywheel.
Calculations are not required.

[3 marks]

9

Do not write outside the box

0 4 A proton with $0.675\ \text{MeV}$ of kinetic energy collides and fuses with a stationary nucleus of boron-11 $\left({}^{11}_{5}\text{B}\right)$. An excited carbon-$12$ $\left({}^{12}_{6}\text{C}^{*}\right)$ nucleus is produced.

$$\text{p} + {}^{11}_{5}\text{B} \rightarrow {}^{12}_{6}\text{C}^{*}$$

This excited carbon-12 nucleus de-excites to a stable carbon-12 $\left({}^{12}_{6}\text{C}\right)$ nucleus by emitting a gamma photon.

$${}^{12}_{6}\text{C}^{*} \rightarrow {}^{12}_{6}\text{C} + \gamma$$

0 4 . 1 Calculate, in MeV, the energy of this gamma photon.
Assume the carbon nucleus does not recoil when the gamma ray is emitted.

State your answer to an appropriate number of significant figures.

mass of ${}^{11}_{5}\text{B}$ nucleus $= 11.00666\ \text{u}$

mass of ${}^{12}_{6}\text{C}$ nucleus $= 11.99680\ \text{u}$

[5 marks]

energy of gamma photon = _____ MeV

Do not write outside the box

0 4 . 2 An alternative mode of decay for ${}^{12}_{6}C^{*}$ is decay into a beryllium-8 $\left({}^{8}_{4}Be\right)$ nucleus and an alpha particle $\left({}^{4}_{2}\alpha\right)$.

$$ {}^{12}_{6}C^{*} \rightarrow {}^{8}_{4}Be + {}^{4}_{2}\alpha $$

The carbon nucleus is initially stationary. The beryllium-8 nucleus and the alpha particle move as a result of the decay.

Compare the momentum and the kinetic energy of the ${}^{8}_{4}Be$ nucleus to the momentum and the kinetic energy of the alpha particle immediately after the decay.

Support your answer with a calculation.

[4 marks]

momentum _____

_____

_____

kinetic energy _____

_____

_____

Question 4 continues on the next page

Do not write outside the box

0 4 . 3 One alpha particle with $2.9\ \mathrm{MeV}$ of kinetic energy rebounds from a different stationary $^{12}_{6}\mathrm{C}$ nucleus.

Show that the closest separation between the alpha particle and the $^{12}_{6}\mathrm{C}$ nucleus is approximately $6\ \mathrm{fm}$.

[3 marks]

0 4 . 4 Nuclear radii were initially estimated using the technique of the closest approach of alpha particles.

Electron-diffraction experiments give more accurate determinations of nuclear radii.

Suggest why.

[2 marks]

_____

_____

_____

_____

14

Do not write outside the box

0 5 . 1 The intensity of solar radiation at the radius of the Earth's orbit is $1400\ \mathrm{W\ m^{-2}}$.

Calculate the power output of the Sun.

distance of Earth from Sun = $1.5 \times 10^{8}\ \mathrm{km}$

[2 marks]

power output = _____ W

Question 5 continues on the next page

Do not write outside the box

Concentrated solar power (CSP) stations store the energy from solar radiation.

Figure 5 shows one CSP station.

Figure 5

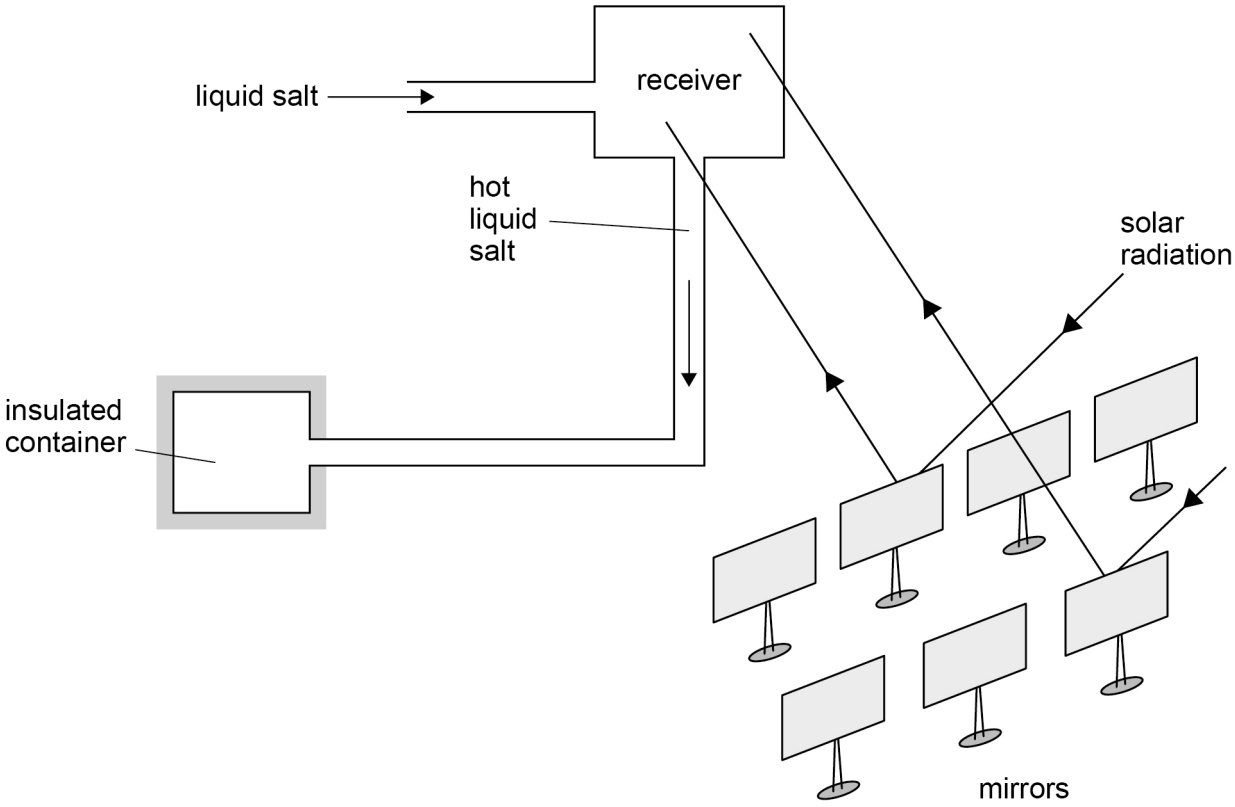

Mirrors reflect solar radiation onto a receiver. Energy from the solar radiation is transferred to liquid salt that flows through the receiver. The hot liquid salt is stored in an insulated container.

Do not write outside the box

0 5 . 2 This CSP station has 10 000 mirrors. Each mirror has a reflecting area of $120\ m^2$ and a reflection efficiency of 90%.

The intensity of solar radiation at each mirror is $900\ W\ m^{-2}$.

Calculate, in MW, the total power of the solar radiation reflected by the mirrors.

[2 marks]

total power = _____ MW

0 5 . 3 The reflected solar radiation heats liquid salt flowing through the receiver.

Liquid salt enters the receiver at 290 °C and leaves at 570 °C.
The salt flows through the receiver at a rate of $0.75\ m^3\ s^{-1}$.

Calculate the rate of energy transfer to the liquid salt in the receiver.

specific heat capacity of liquid salt = $1.5\ kJ\ kg^{-1}\ K^{-1}$
density of liquid salt = $1800\ kg\ m^{-3}$

[3 marks]

rate of energy transfer = _____ $J\ s^{-1}$

Question 5 continues on the next page

Do not write outside the box

0 5 . 4 The hot liquid salt is stored in an insulated container.

Figure 6 shows one cylindrical storage container for liquid salt at 570 °C. The internal diameter of the container is 42 m.

Figure 6

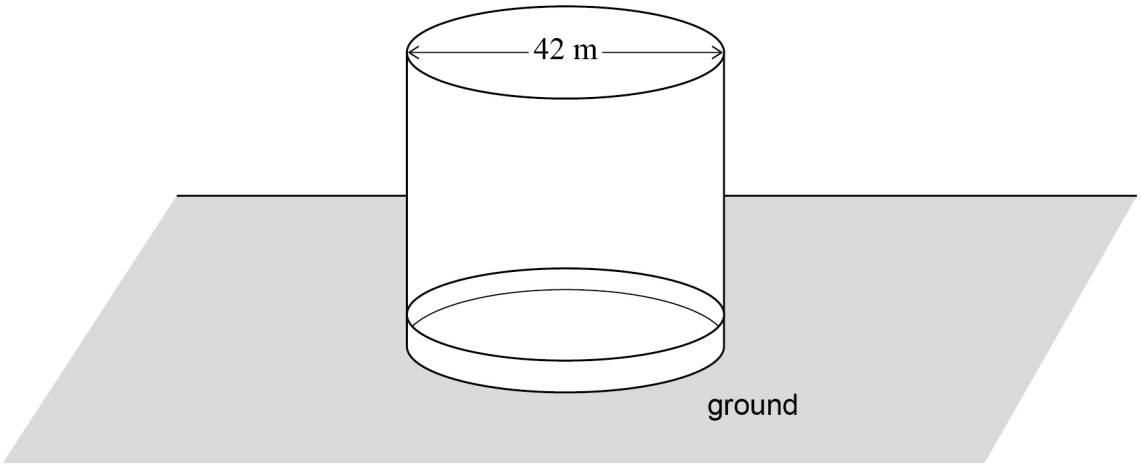

The initial rate of energy transfer through the floor of the container must be less than 100 kW. Assume that the temperature of the ground below the container remains constant at 15 °C.

Deduce whether a concrete floor of 45 cm thickness will be suitable.

thermal conductivity of concrete = $0.24\ \mathrm{W\ m^{-1}\ K^{-1}}$

[3 marks]

10

Do not write outside the box

0 6 . 1 Define the binding energy of a nucleus.

[1 mark]

_____

_____

0 6 . 2 Calculate the binding energy of a nucleus of thorium-232 $\left({}^{232}_{90}\text{Th}\right)$.

mass of ${}^{232}_{90}\text{Th}$ nucleus = 3.852×10^{-25} kg

[4 marks]

binding energy = _____ J

Question 6 continues on the next page

Do not write outside the box

0 6 . 3 Thorium-232 nuclei absorb neutrons and become uranium-233 nuclei after a series of radioactive decays.

$$^{1}_{0}\text{n} + ^{232}_{90}\text{Th} \rightarrow ^{233}_{90}\text{Th}$$

$$^{233}_{90}\text{Th} \rightarrow \mathbf{R} + ^{0}_{-1}\beta$$

$$\mathbf{R} \rightarrow ^{233}_{92}\text{U} + ^{0}_{-1}\beta$$

Deduce the proton number and nucleon number of **R**.

[1 mark]

proton number = _____

nucleon number = _____

Do not write outside the box

0 6 . 4 Uranium-233 nuclei undergo neutron-induced fission.

One possible fission reaction is shown below.

$$^{1}_{0}n + ^{233}_{92}U \rightarrow ^{136}_{54}Xe + ^{95}_{38}Sr + 3\,^{1}_{0}n$$

Table 2 shows the binding energy per nucleon for each nuclide.

Table 2

Nuclide	Binding energy per nucleon / MeV
$^{233}_{92}U$	7.60396
$^{136}_{54}Xe$	8.39619
$^{95}_{38}Sr$	8.54912

Calculate, in J, the energy released in this fission reaction.

[3 marks]

energy released = _____ J

Question 6 continues on the next page

Do not write outside the box

0 6 . 5 When a large number of nuclei of uranium-233 undergo fission, the average energy released per fission will be different to your answer to Question **06.4**.

Explain why.

[1 mark]

0 6 . 6 The critical mass of uranium-233 is 16 kg.

Show that the radius of a sphere of uranium-233 of critical mass is approximately 6 cm.

density of uranium-233 = 1.9×10^4 kg m^{-3}

[2 marks]

Do not write outside the box

0 6 . 7 The ratio of surface area to volume for a three-dimensional object is σ, where

$$\sigma = \frac{\text{surface area}}{\text{volume}}$$

Determine σ for the sphere in Question **06.6**.

[2 marks]

$\sigma =$ _____ m^{-1}

0 6 . 8 Explain why a cylinder of uranium-233 with a mass of 16 kg is unable to sustain a fission chain reaction.

[3 marks]

_____

_____

_____

_____

_____

_____

_____

_____

_____

_____

_____

_____

17

END OF SECTION A

Do not write outside the box

Section B

Each of the questions in this section is followed by four responses, **A**, **B**, **C** and **D**.

For each question select the best response.

Only **one** answer per question is allowed.
For each question, completely fill in the circle alongside the appropriate answer.

CORRECT METHOD ⬬ WRONG METHODS

If you want to change your answer you must cross out your original answer as shown.

If you wish to return to an answer previously crossed out, ring the answer you now wish to select as shown.

You may do your working in the blank space around each question but this will not be marked. Do **not** use additional pages for this working.

0 7 Which produces the largest change in temperature in a system?

[1 mark]

	Work done on system	Heating of system
A	+100 J	−200 J
B	−100 J	+300 J
C	−100 J	−300 J
D	+100 J	+150 J

Do not write outside the box

0 8 A student uses the equipment below to determine the specific heat capacity of a metal.

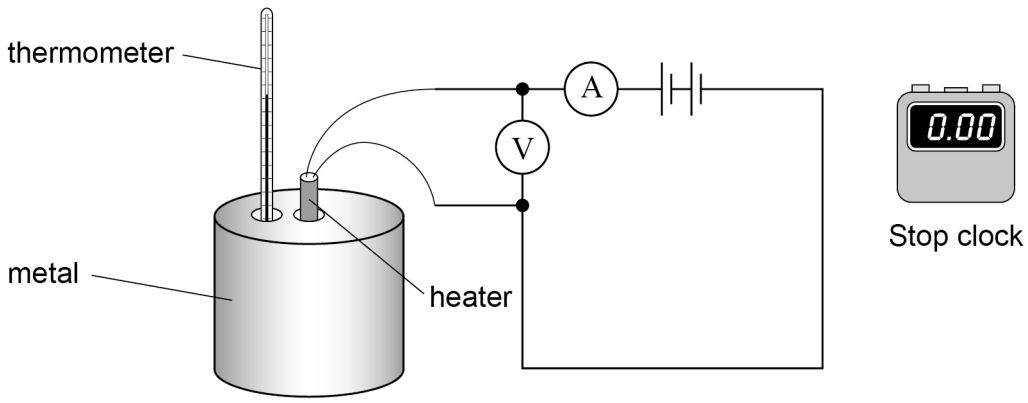

Which change to the experimental procedure increases the accuracy of the measured value of the specific heat capacity?

[1 mark]

A insulating the metal block ⬭

B repeating the measurements and calculating a mean ⬭

C using a metal block with a greater mass ⬭

D using a thermometer with a smaller resolution ⬭

Turn over for the next question

Do not write outside the box

0 9 Part of a house wall contains two materials, **P** and **Q**. The wall separates air at different temperatures.

The U-value of **P** is four times the U-value of **Q**.

The area of **P** is half the area of **Q**.

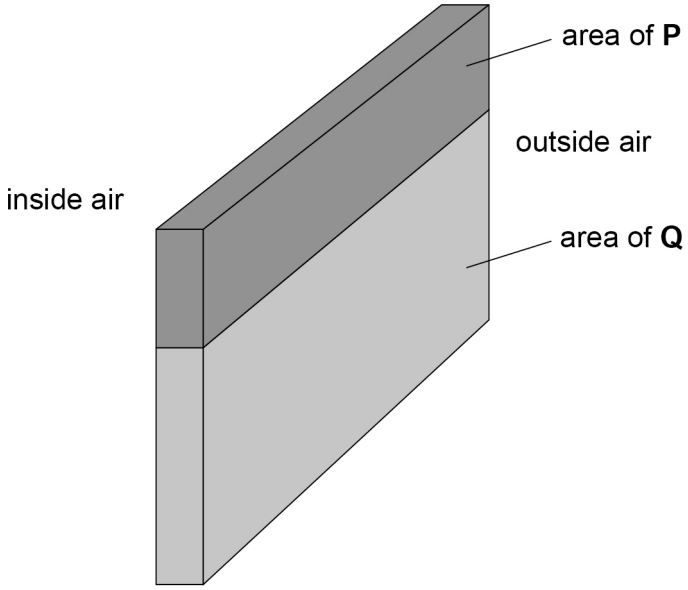

What is $\dfrac{\text{rate of energy transfer through } \mathbf{P}}{\text{rate of energy transfer through } \mathbf{Q}}$?

[1 mark]

A 8 ⬭

B 2 ⬭

C $\frac{1}{2}$ ⬭

D $\frac{1}{8}$ ⬭

Do not write outside the box

1 0 The graph shows the variation of volume V with temperature θ in °C for 2 mol of an ideal gas at constant pressure p.

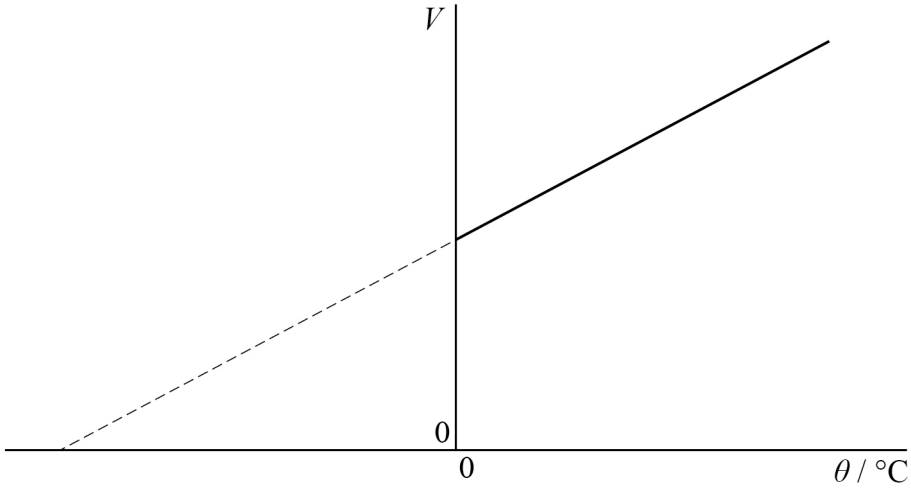

What is the gradient of the line?

[1 mark]

A $\frac{546R}{p}$ ⬭

B $\frac{2R}{p}$ ⬭

C $\frac{546k}{p}$ ⬭

D $\frac{2k}{p}$ ⬭

Turn over for the next question

Do not write outside the box

1 1 A gas undergoes one cycle of changes, starting at **X** as shown.

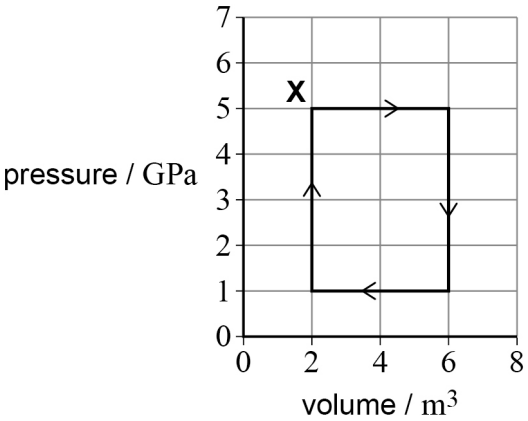

What is the net heat transfer to the gas?

[1 mark]

A −20 GJ ⬭

B −16 GJ ⬭

C +16 GJ ⬭

D +20 GJ ⬭

1 2 A ball of internal diameter 40 mm is filled with an ideal gas.
The pressure of the gas is 1.1×10^5 Pa and the temperature is 25 °C.

What is the number of gas particles in the ball?

[1 mark]

A 9.0×10^{20} ⬭

B 7.2×10^{21} ⬭

C 1.1×10^{22} ⬭

D 8.5×10^{22} ⬭

Do not write outside the box

1 3 A sample of nitrogen gas is at 80 °C.
Nitrogen has a molar mass of $28\ \text{g mol}^{-1}$.

What is the root mean square speed of the molecules in the sample?

[1 mark]

A $0.27\ \text{km s}^{-1}$ ⬭

B $0.56\ \text{km s}^{-1}$ ⬭

C $72\ \text{km s}^{-1}$ ⬭

D $310\ \text{km s}^{-1}$ ⬭

Turn over for the next question

Do not write outside the box

1 4 The graph shows the variation of intensity I of diffracted electrons with diffraction angle θ for a pure nuclide **X**.

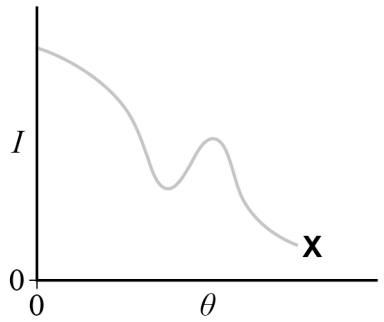

The experiment is repeated with a larger nuclide **Y**. The energy of the electrons is unchanged.

Which graph shows the variation of I with θ for nuclide **Y**?

[1 mark]

A

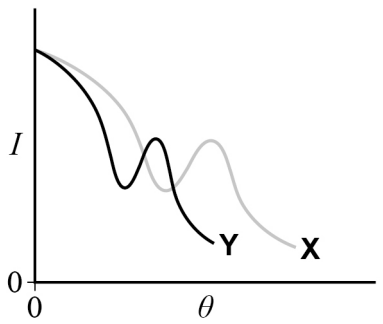

B

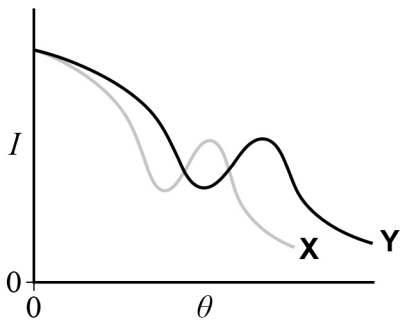

C

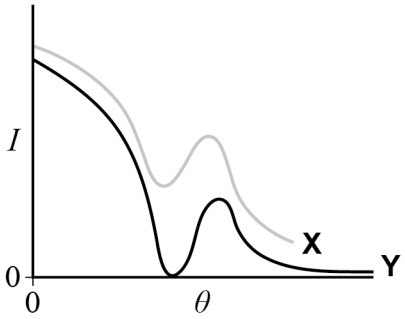

D

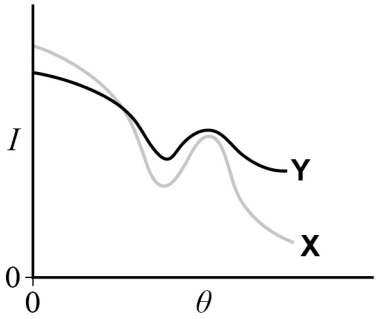

A ⬭

B ⬭

C ⬭

D ⬭

Do not write outside the box

1 5 The radius of a polonium-210 nucleus is 5.6 fm.

What is the radius of a silicon-28 nucleus?

[1 mark]

A 0.7 fm

B 1.2 fm

C 2.0 fm

D 2.9 fm

1 6 Moderators are used in thermal nuclear reactors because

[1 mark]

A fast neutrons are less likely to escape from the reactor.

B fast neutrons are more likely to decay into a proton.

C slow neutrons are unaffected by control rods.

D slow neutrons are more likely to be absorbed by the nuclear fuel.

1 7 The first step in the hydrogen cycle for solar fusion leads to the formation of deuterium nuclei.

A deuterium nucleus is produced by the fusion of two protons and the emission of

[1 mark]

A an alpha particle.

B a beta-minus particle.

C a beta-plus particle.

D a neutron.

Do not write outside the box

1 8 The moment of inertia of a thin rod of mass M and length L rotating about its end is $\frac{1}{3}ML^2$.

The rod rotates with angular speed ω.

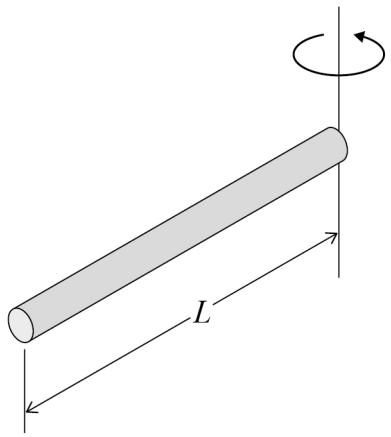

The rod is now made to rotate about its centre with the same rotational kinetic energy.

The moment of inertia of the rod is now $\frac{1}{12}ML^2$.

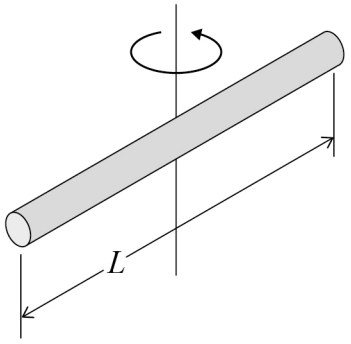

What is the new angular speed of the rod?

[1 mark]

A $\frac{\omega}{4}$

B $\frac{\omega}{2}$

C 2ω

D 4ω

Do not write outside the box

1 9 Which graph shows constant angular acceleration?

[1 mark]

A

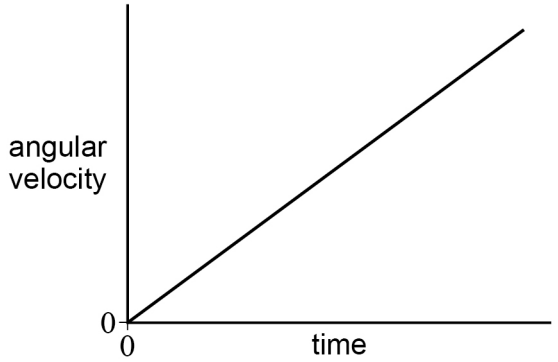

B

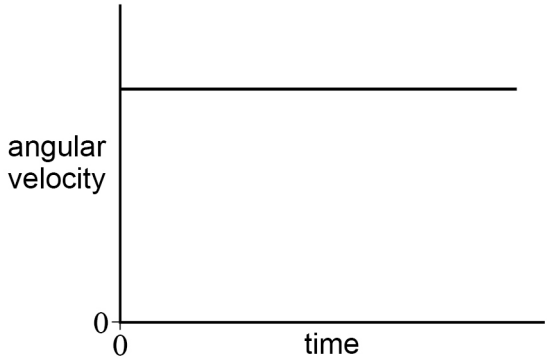

C

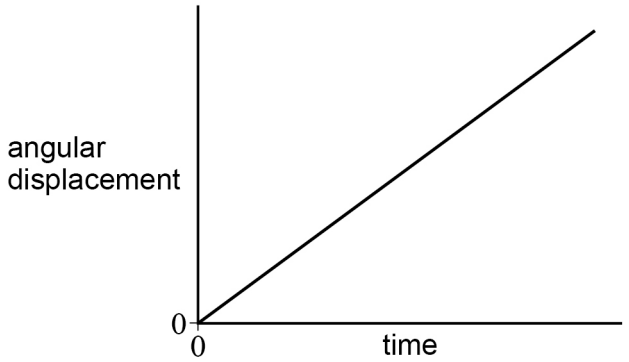

D

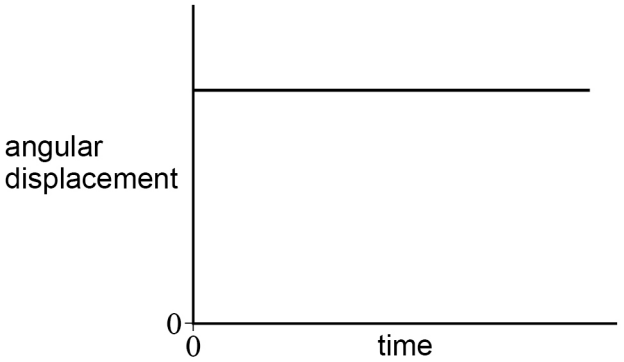

A ⬭

B ⬭

C ⬭

D ⬭

Do not write outside the box

2 0 Air moving at $12\ \mathrm{m\ s^{-1}}$ is incident on a wind turbine.

The wind turbine has a power output of $150\ \mathrm{kW}$ at 40% efficiency.

What length are the blades of the wind turbine?

density of air = $1.3\ \mathrm{kg\ m^{-3}}$

[1 mark]

A $6.5\ \mathrm{m}$ ⬭

B $8.4\ \mathrm{m}$ ⬭

C $10\ \mathrm{m}$ ⬭

D $21\ \mathrm{m}$ ⬭

Do not write outside the box

2 1 Which is the characteristic curve for an illuminated solar cell?

[1 mark]

A

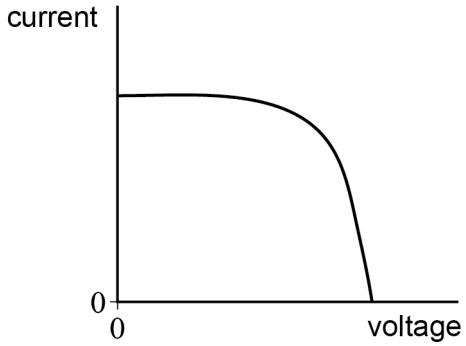

B

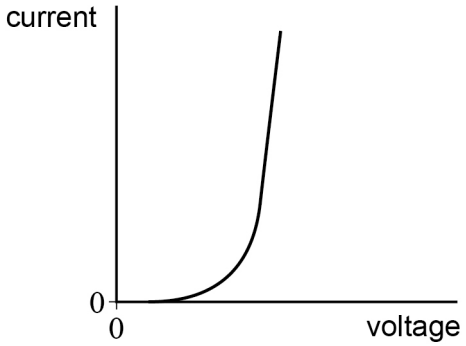

C

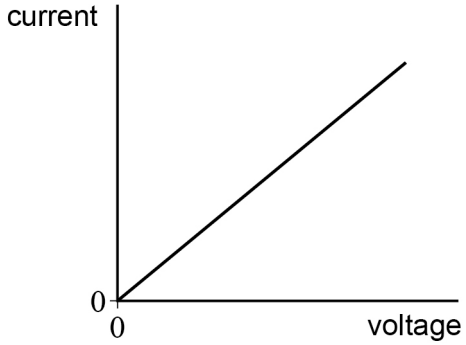

D

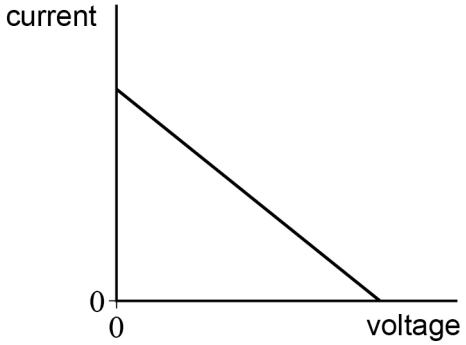

A ⬭

B ⬭

C ⬭

D ⬭

15

END OF QUESTIONS

Do not write outside the box

There are no questions printed on this page

DO NOT WRITE ON THIS PAGE
ANSWER IN THE SPACES PROVIDED

Do not write outside the box

Question number	**Additional page, if required.** **Write the question numbers in the left-hand margin.**

Do not write outside the box

Question number	**Additional page, if required.** **Write the question numbers in the left-hand margin.**

Do not write outside the box

Question number	**Additional page, if required.** **Write the question numbers in the left-hand margin.**

Do not write outside the box

There are no questions printed on this page

DO NOT WRITE ON THIS PAGE
ANSWER IN THE SPACES PROVIDED

Copyright information

For confidentiality purposes, all acknowledgements of third-party copyright material are published in a separate booklet. This booklet is published after each live examination series and is available for free download from www.oxfordaqaexams.org.uk.

Permission to reproduce all copyright material has been applied for. In some cases, efforts to contact copyright-holders may have been unsuccessful and Oxford International AQA Examinations will be happy to rectify any omissions of acknowledgements. If you have any queries please contact the Copyright Team.

Copyright © 2022 Oxford International AQA Examinations and its licensors. All rights reserved.