OXFORD
INTERNATIONAL
AQA EXAMINATIONS

Please write clearly in block capitals.

Centre number | | | | | | Candidate number | | | | |

Surname _____

Forename(s) _____

Candidate signature _____

INTERNATIONAL A-LEVEL
PHYSICS

Unit 3 Fields and their consequences

Friday 14 June 2019 07:00 GMT Time allowed: 2 hours

Materials
For this paper you must have:
- a Data and Formulae Booklet as a loose insert
- a ruler with millimetre measurements
- a scientific calculator, which you are expected to use where appropriate.

Instructions
- Use black ink or black ball-point pen.
- Fill in the boxes at the top of this page.
- Answer **all** questions.
- You must answer the questions in the spaces provided. Do not write outside the box around each page or on blank pages.
- All working must be shown.
- If you need extra space for your answer(s), use the lined pages at the end of this book. Write the question number against your answer(s).
- Do all rough work in this book. Cross through any work you do not want to be marked.

Information
- The marks for questions are shown in brackets.
- The maximum mark for this paper is 80.

For Examiner's Use	
Question	Mark
1	
2	
3	
4	
5	
6–35	
TOTAL	

Do not write outside the box

Section A

Answer **all** questions in this section.

0 1 . 1 A satellite of mass m orbits at a constant height h above the Earth's surface.

Show that the orbital speed of the satellite is

$$v = \sqrt{\frac{GM}{R+h}}$$

where M is the mass of the Earth and R is the radius of the Earth.

[2 marks]

0 1 . 2 The satellite has $m = 450\ \text{kg}$ and orbits at $h = 640\ \text{km}$.

Calculate the kinetic energy of the satellite.

[2 marks]

kinetic energy = _____ J

Do not write outside the box

0 1 . 3 The satellite is moved to a new orbit where $h = 705$ km.

Calculate the change in gravitational potential energy of the satellite.

[3 marks]

change in gravitational potential energy = _____ J

0 1 . 4 The total energy of the satellite increases when it is moved to the new orbit.

Explain why.

[2 marks]

_____

_____

_____

_____

_____

_____

_____

_____

9

Do not write outside the box

There are no questions printed on this page

DO NOT WRITE ON THIS PAGE
ANSWER IN THE SPACES PROVIDED

Do not write outside the box

0 2 A thin aluminium sheet hangs from a pivot **P**. The sheet has an arc radius of $17\ \text{cm}$ and an arc length of $12\ \text{cm}$, as shown in **Figure 1**.

Figure 1

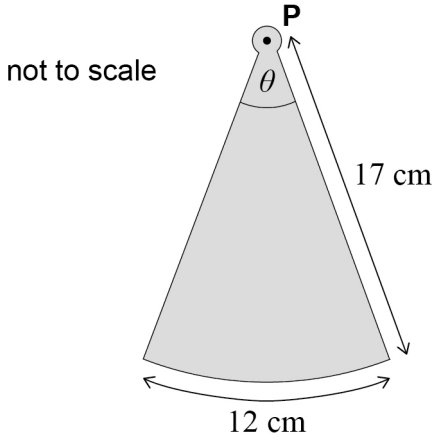

0 2 . 1 The angle between the sides of the sheet is θ.

Show that θ is approximately $0.7\ \text{rad}$.

[1 mark]

Question 2 continues on the next page

Do not write outside the box

0 2 . 2 The sheet is pulled to one side and released to oscillate in a vertical plane. A light gate is placed vertically below **P**. The sheet swings from side to side, interrupting the light beam.

Figure 2

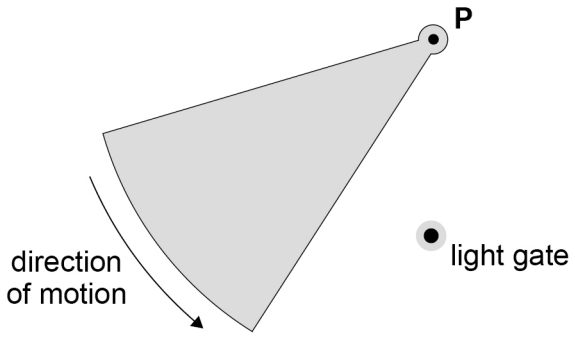

A datalogger records the time t for which the sheet interrupts the light beam during each swing. **Figure 3** shows the variation of t with the number of swings through the light gate.

Figure 3

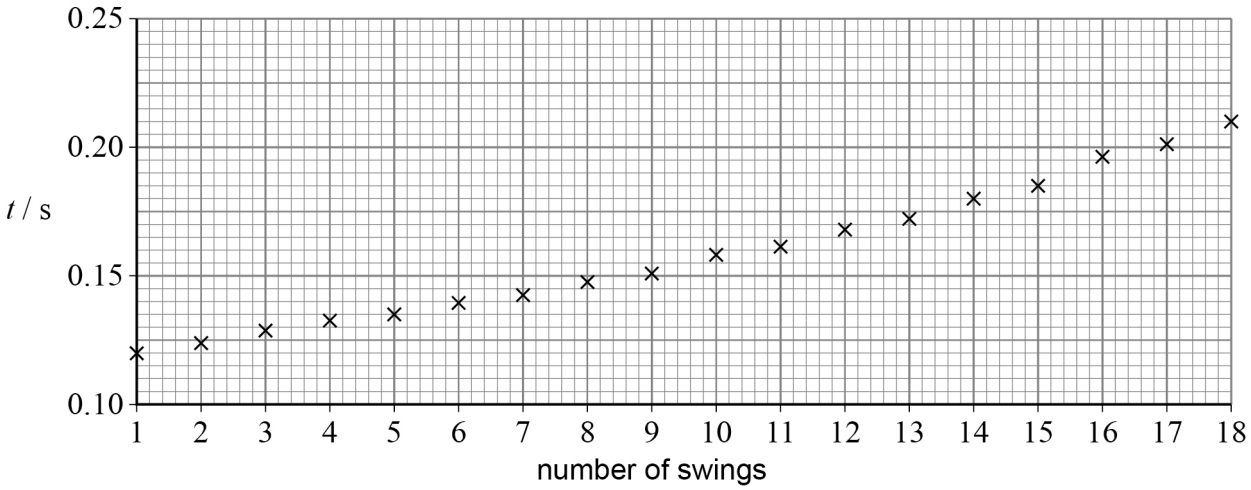

Do not write outside the box

The average angular speed during one swing of the sheet is $\overline{\omega}$.

Determine using **Figure 3** the largest value of $\overline{\omega}$.

[2 marks]

largest value of $\overline{\omega}$ = _____ rad s^{-1}

0 2 . 3 The sheet completes more than 18 swings before coming to a stop.

Results for t cannot be recorded after 18 swings.

Suggest why.

[1 mark]

_____

_____

_____

_____

Question 2 continues on the next page

Do not write outside the box

0 2 . 4 The aluminium sheet is now made to swing through a uniform magnetic field between two magnets as shown in **Figure 4**.

Figure 4

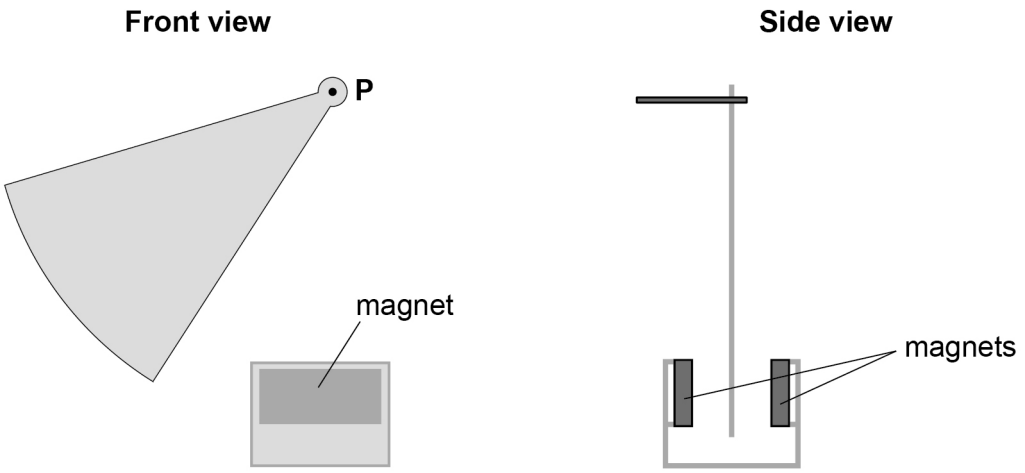

The sheet is released from the same initial position as in question **02.2**.

The presence of the magnetic field increases the damping of the oscillations of the sheet.

Explain why.

[3 marks]

_____

_____

_____

_____

_____

_____

7

Do not write outside the box

0 3 **Figure 5** shows a parallel plate capacitor connected to a 3.0 kV dc supply. The capacitor is made from two identical metal plates separated by 5.0 mm of air. Each plate measures 30 cm in length and 20 cm in width.

Figure 5

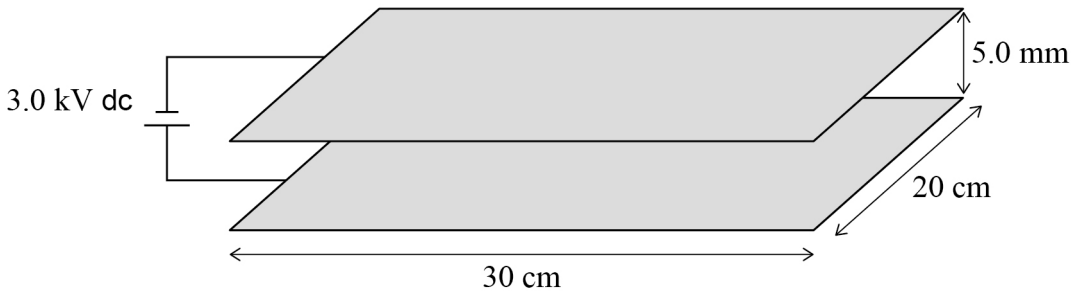

Figure 6 shows a side view of the capacitor.

Figure 6

0 3 . 1 Draw on **Figure 6** the electric field lines between the plates.

[2 marks]

0 3 . 2 Calculate the electric field strength between the plates.

[2 marks]

electric field strength = _____ N C^{-1}

Question 3 continues on the next page

Do not write outside the box

0 3 . 3 The magnitude of the charge stored on each plate is Q.

Show that the electric field strength E can be expressed as

$$E = \frac{Q}{\varepsilon_0 \varepsilon_r A}$$

where ε_r is the relative permittivity of air and A is the area of overlap of the plates.

[2 marks]

0 3 . 4 Calculate Q.

$\varepsilon_r = 1.00$

[2 marks]

Q = _____ C

Do not write outside the box

0 3 . 5 State the electrical properties of a dielectric material.

[2 marks]

0 3 . 6 The capacitor is isolated from the dc supply and a dielectric material is inserted between the plates. The potential difference between the plates changes.

Explain the change in the potential difference.

[2 marks]

12

Turn over for the next question

Do not write outside the box

0 4 **Figure 7** is a plan view of a cyclotron. Two hollow semi-circular electrodes, called dees, lie within a uniform magnetic field. An alternating high-voltage supply is connected to the dees.

A proton enters the cyclotron at **S** and moves in the plane of the paper. The dashed line shows the path of the proton.

Three positions, **A**, **B** and **C**, along the path are marked.

- The proton crosses a potential difference between **A** and **B**.
- The proton moves within the uniform magnetic field between **B** and **C**.

Figure 7

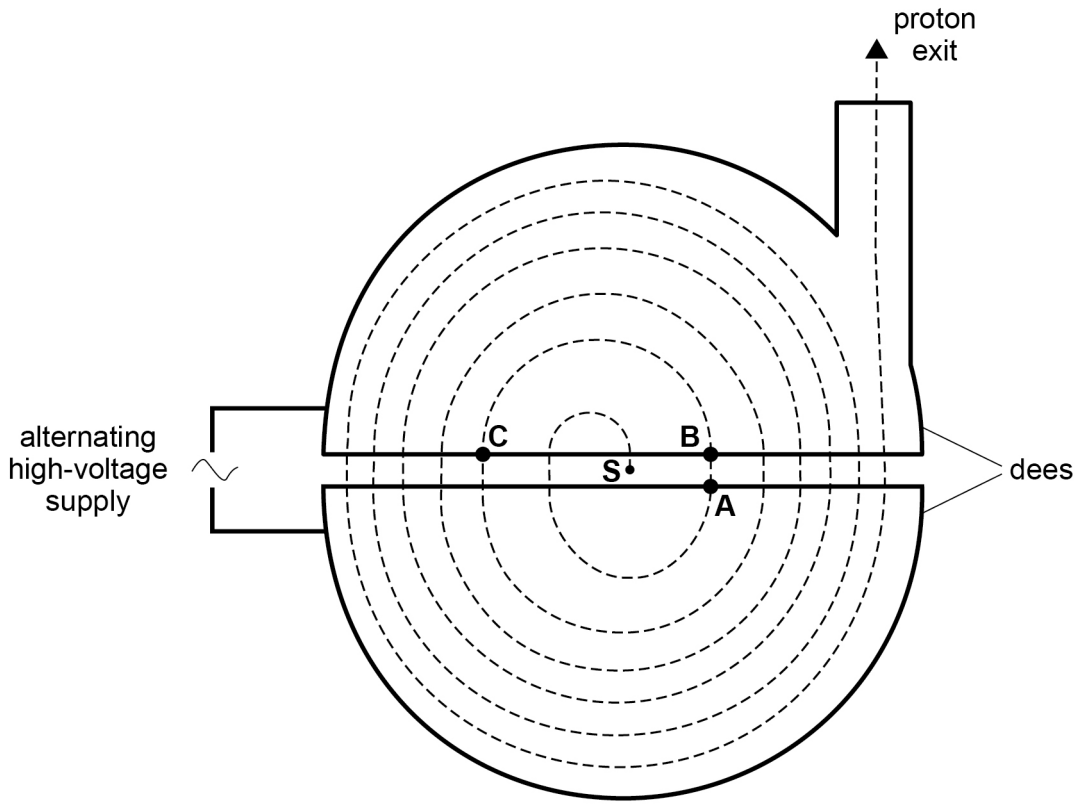

0 4 . 1 State the direction of the magnetic field in **Figure 7**.

[1 mark]

_____

Do not write outside the box

0 4 . 2 Explain what happens to the proton as it crosses from **A** to **B**.

[2 marks]

0 4 . 3 Explain the path of the proton as it moves from **B** to **C**.

[3 marks]

Question 4 continues on the next page

Do not write outside the box

0 4 . 4 The angular speed ω of the proton in the cyclotron is

$$\omega = \frac{Bq}{m}$$

where B is the magnetic flux density in the cyclotron
q is the charge of the proton
m is the mass of the proton.

Show that the kinetic energy E_k of the proton as it exits the cyclotron is

$$E_k = \frac{(BqR)^2}{2m}$$

where R is the maximum radius of the proton path in the cyclotron.

[2 marks]

Do not write outside the box

0 4 . 5 In one cyclotron, protons exit with $E_k = 10$ MeV when $R = 0.34$ m.

Calculate the magnetic flux density in the cyclotron.
Ignore relativistic effects in your calculation.

[3 marks]

magnetic flux density = _____ T

11

Turn over for the next question

Do not write outside the box

0 5 The activity A of a sample of radioactive copper–67 was recorded over time t.

Figure 8 shows the variation of $\ln(A/\text{Bq})$ with t.

Figure 8

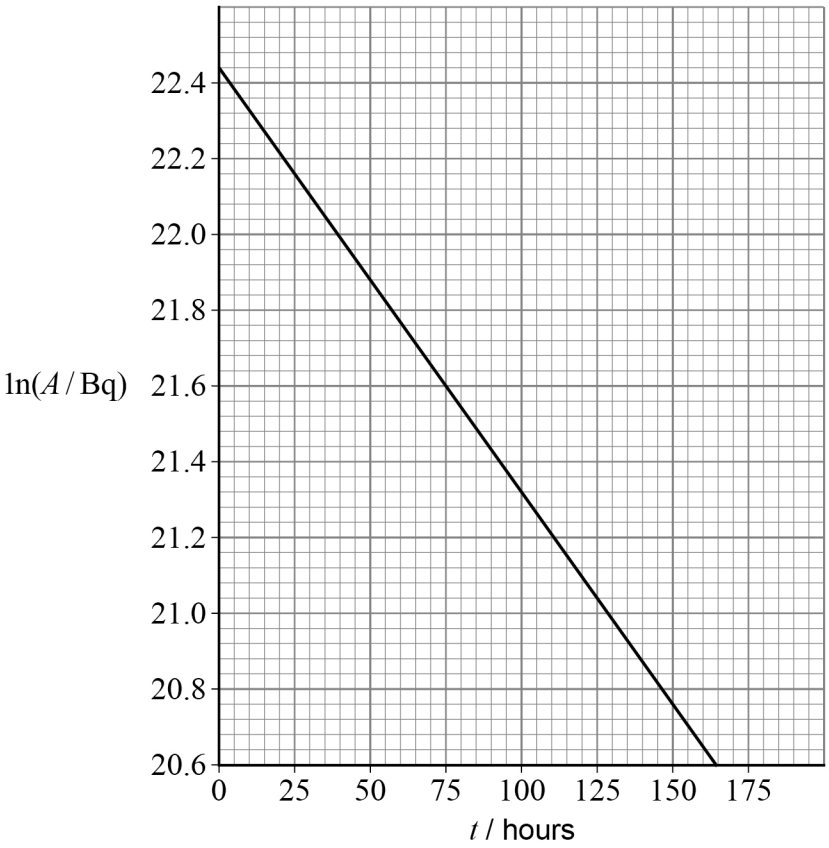

0 5 . 1 Show that the decay constant of copper–67 is approximately $3 \times 10^{-6}\ \text{s}^{-1}$.

[4 marks]

Do not write outside the box

0 5 . 2 Show that the initial number of atoms of copper–67 in the sample is about 2×10^{15}.

[4 marks]

0 5 . 3 Copper–67 decays into stable zinc–67.

Calculate the mass of zinc–67 formed when all the atoms in the copper–67 sample have decayed.

State an appropriate unit for your answer.

[3 marks]

mass = _____

unit = _____

11

END OF SECTION A

Do not write outside the box

Section B

Each of the questions in this section is followed by four responses, **A**, **B**, **C** and **D**.

For each question select the best response.

Only **one** answer per question is allowed.
For each question completely fill in the circle alongside the appropriate answer.

CORRECT METHOD ⬬ WRONG METHODS

If you want to change your answer you must cross out your original answer as shown.

If you wish to return to an answer previously crossed out, ring the answer you now wish to select as shown.

You may do your working in the blank space around each question but this will not be marked. Do **not** use additional sheets for this working.

0 6 The diagram shows a twelve-hour analogue clock.

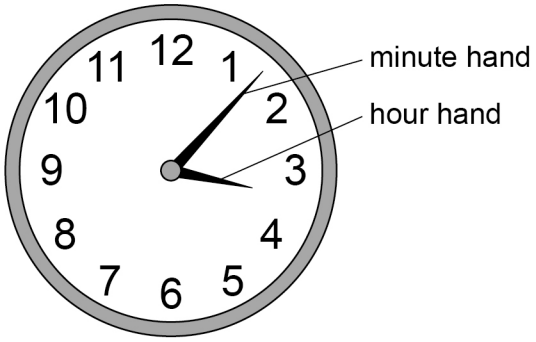

What is the average angular speed of the hour hand?

[1 mark]

A 7.3×10^{-5} rad s^{-1}

B 1.5×10^{-4} rad s^{-1}

C 1.8×10^{-3} rad s^{-1}

D 5.2×10^{-1} rad s^{-1}

Do not write outside the box

0 7 A car of mass 1200 kg travels at a constant speed around a horizontal circular bend of radius 15 m.

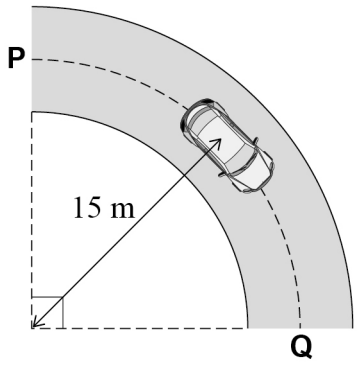

The car travels from **P** to **Q** in 1.8 s.

What is the centripetal force acting on the car?

[1 mark]

A 220 000 N ⬭

B 14 000 N ⬭

C 5600 N ⬭

D 1000 N ⬭

Turn over for the next question

Do not write outside the box

0 8 The diagram shows two connected wheels, **X** and **Y**.

The diameter of wheel **Y** is twice the diameter of wheel **X**.
Wheel **X** drives wheel **Y** with a belt. The belt does not slip.
Wheel **X** rotates at a constant rate.

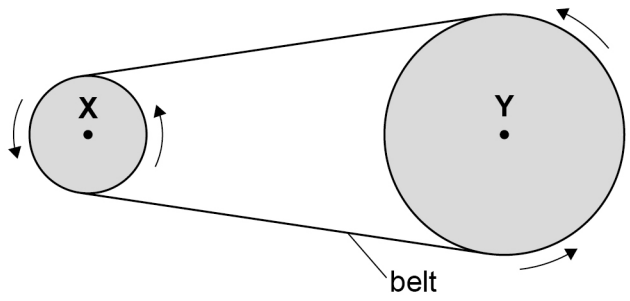

What is $\dfrac{\text{angular speed of } \mathbf{X}}{\text{angular speed of } \mathbf{Y}}$?

[1 mark]

A 4

B 2

C 1

D 0.5

0 9 A ball of mass $0.2\ \text{kg}$ moves in a horizontal circle of radius $50\ \text{cm}$ at the end of a string. The ball moves at a constant speed of $9.0\ \text{m s}^{-1}$.

What is the horizontal force exerted by the ball on the string?

[1 mark]

A $8\ \text{N}$ away from the centre of the circle

B $8\ \text{N}$ towards the centre of the circle

C $32\ \text{N}$ away from the centre of the circle

D $32\ \text{N}$ towards the centre of the circle

Do not write outside the box

1 0 The graph shows the variation of velocity v with time t for an object undergoing simple harmonic motion.

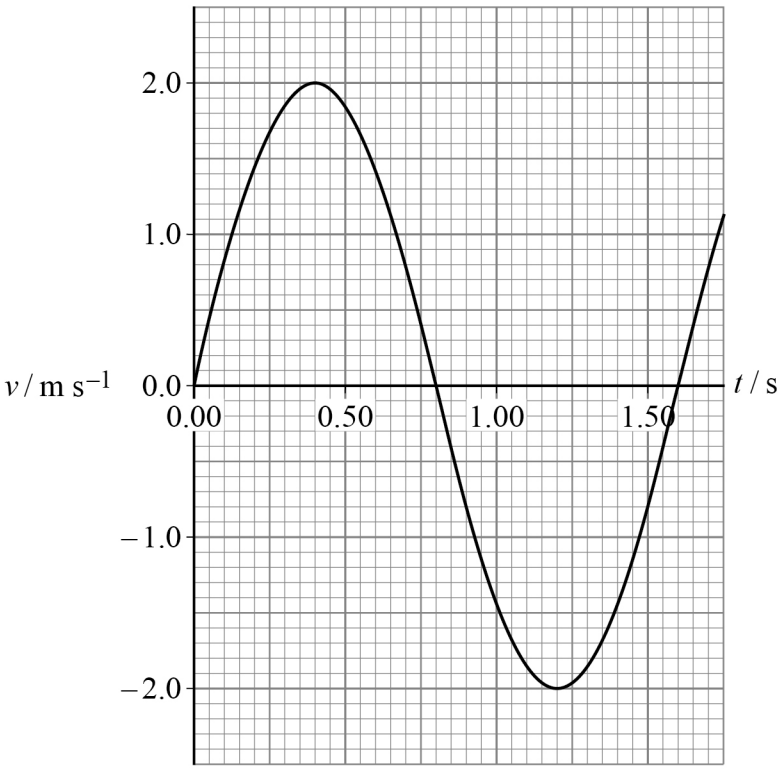

What is the amplitude of oscillation?

[1 mark]

A 1.40 m

B 0.80 m

C 0.54 m

D 0.51 m

Turn over for the next question

Do not write outside the box

1 1 A mass–spring system of mass m oscillates with frequency f on a spring with spring constant k.

A second mass–spring system oscillates at frequency $3f$.

Which row is correct for the second system?

[1 mark]

	Mass	Spring constant
A	$18m$	$2k$
B	$9m$	$3k$
C	$3m$	$9k$
D	$2m$	$18k$

1 2 The variation of displacement x with time t for an oscillator of mass m is

$$x = 2.4\cos(0.76t)$$

What is the total energy of the oscillator?

[1 mark]

A $0.9m$

B $1.4m$

C $1.7m$

D $3.3m$

Do not write outside the box

1 3 The diagram shows two planets, **P** and **Q**.

The distance between the centres of the planets is d.
The resultant gravitational field strength at **R** is zero.
The distance **PR** is $0.75d$.

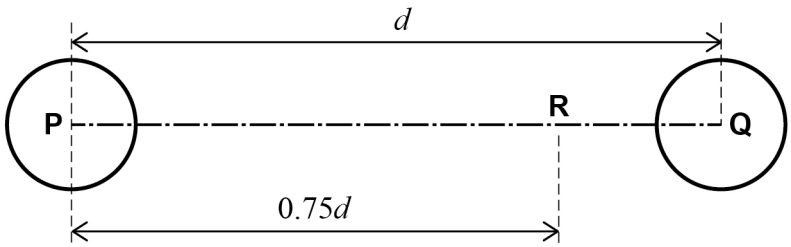

What is $\frac{\text{mass of } \mathbf{P}}{\text{mass of } \mathbf{Q}}$?

[1 mark]

A $\frac{1}{9}$

B $\frac{1}{3}$

C 3

D 9

1 4 The gravitational field strength at the surface of a uniform solid sphere is g.
The radius of the sphere is R.

What is the density of the sphere?

[1 mark]

A $\frac{g}{4\pi G}$

B $\frac{3g}{4\pi GR}$

C $\frac{4g}{3\pi GR}$

D $\frac{4\pi GR}{3g}$

Do not write outside the box

1 5 The graph shows the variation of the gravitational potential V with distance d from the surface of Venus.

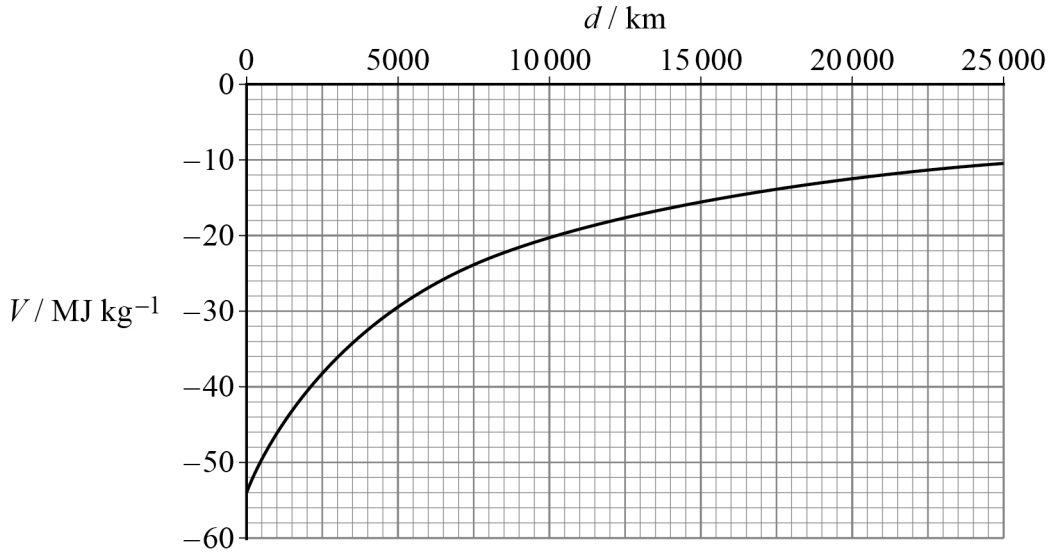

What is the gravitational field strength when $d = 10\ 000$ km?

[1 mark]

A $-2.0\ \text{N kg}^{-1}$ ⬭

B $-1.3\ \text{N kg}^{-1}$ ⬭

C $+1.3\ \text{N kg}^{-1}$ ⬭

D $+2.0\ \text{N kg}^{-1}$ ⬭

Do not write outside the box

1 6 The scale diagram shows two positively charged spheres, **X** and **Y**.
The charge of **X** is five times the charge of **Y**.

The electric field strength at **P** due to **X** is E_X.
The electric field strength at **P** due to **Y** is E_Y.

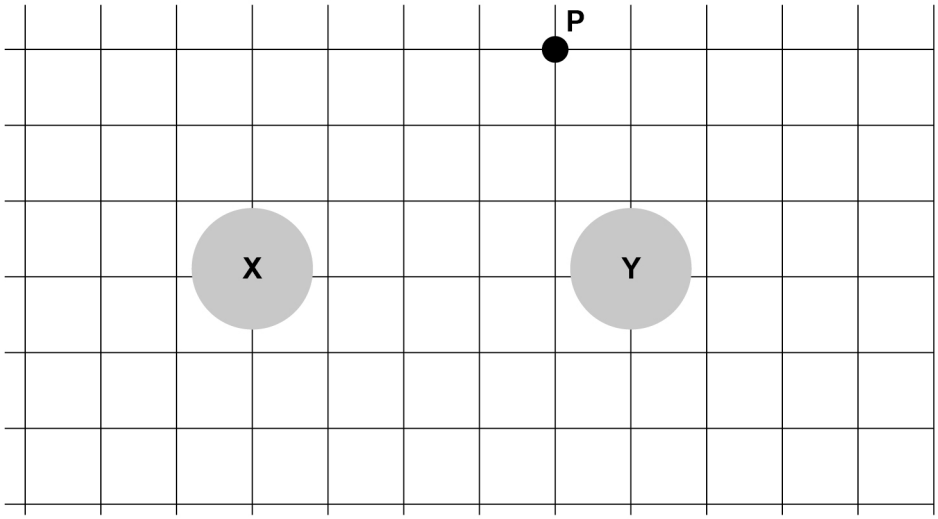

drawn to scale

What is true for E_X and E_Y?

[1 mark]

A $E_X = 2E_Y$ ⬭

B $2E_X = E_Y$ ⬭

C $2E_X = 5E_Y$ ⬭

D $5E_X = 2E_Y$ ⬭

1 7 A positron is at a point in a uniform electric field where the electric field strength is $2.4\ \text{kV m}^{-1}$.

The acceleration of the positron is

[1 mark]

A $4.2 \times 10^{11}\ \text{m s}^{-2}$ in the opposite direction to the electric field strength. ⬭

B $4.2 \times 10^{11}\ \text{m s}^{-2}$ in the same direction as the electric field strength. ⬭

C $4.2 \times 10^{14}\ \text{m s}^{-2}$ in the opposite direction to the electric field strength. ⬭

D $4.2 \times 10^{14}\ \text{m s}^{-2}$ in the same direction as the electric field strength. ⬭

Do not write outside the box

1 8 The graph shows how the charge on a capacitor varies with the potential difference across the capacitor.

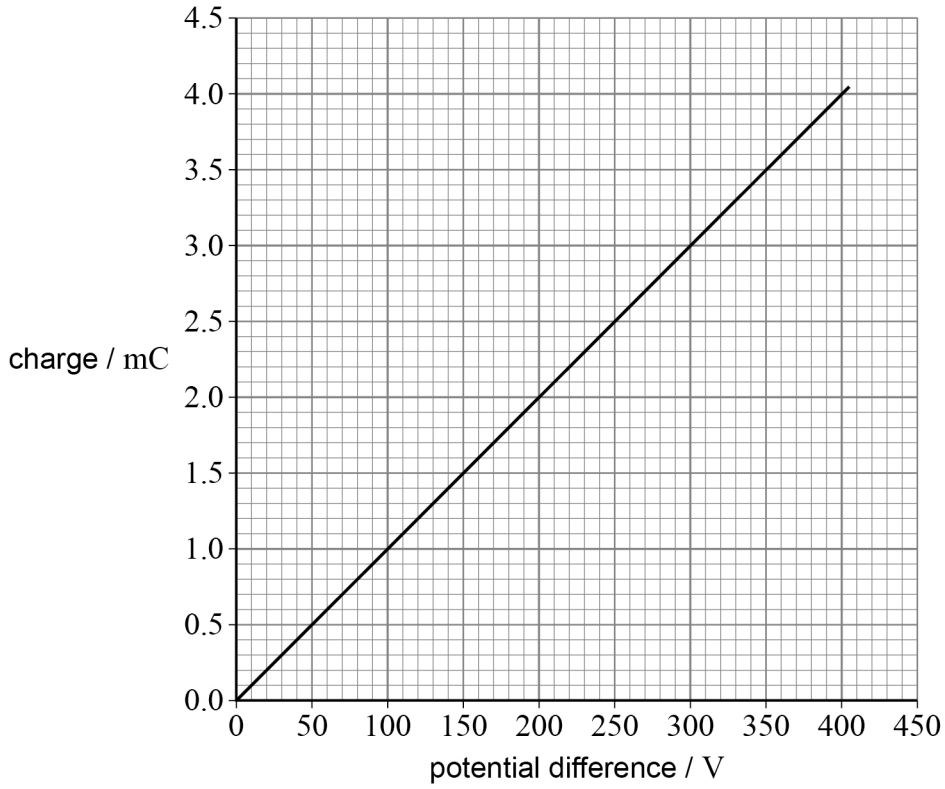

What is the additional energy stored by the capacitor when the potential difference increases from 200 V to 400 V?

[1 mark]

A 0.2 J ⬭

B 0.4 J ⬭

C 0.6 J ⬭

D 0.8 J ⬭

Do not write outside the box

1 9 The diagrams show two patterns of field lines, **X** and **Y**, around a particle.

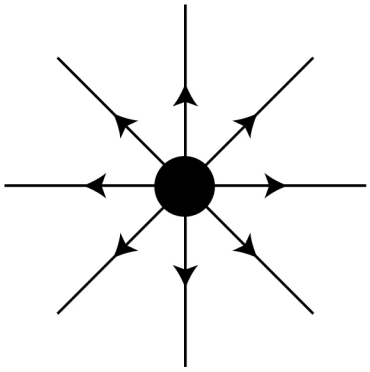

X

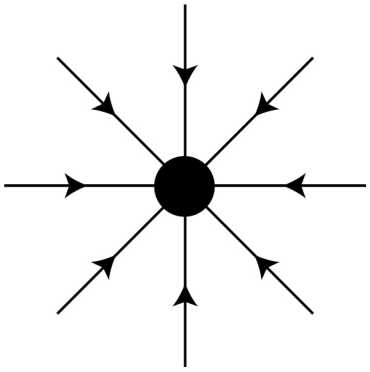

Y

Which row is correct when the particle is a proton?

[1 mark]

	Gravitational field	Electric field	
A	**X**	**X**	⬭
B	**X**	**Y**	⬭
C	**Y**	**X**	⬭
D	**Y**	**Y**	⬭

Turn over for the next question

Do not write outside the box

2 0 Point **P** is a short distance from an isolated positron.

What are the signs of the electric potential and the gravitational potential at **P**?

[1 mark]

	Sign of electric potential	Sign of gravitational potential	
A	Negative	Negative	⬭
B	Positive	Negative	⬭
C	Negative	Positive	⬭
D	Positive	Positive	⬭

2 1 A charged capacitor of capacitance $460\ \mu F$ discharges through a fixed resistor. After $184\ s$ the capacitor has lost 75% of its initial charge.

What is the resistance of the fixed resistor?

[1 mark]

A $2.0 \times 10^5\ \Omega$ ⬭

B $2.9 \times 10^5\ \Omega$ ⬭

C $1.4 \times 10^6\ \Omega$ ⬭

D $2.9 \times 10^8\ \Omega$ ⬭

Do not write outside the box

Turn over for the next question

DO NOT WRITE ON THIS PAGE
ANSWER IN THE SPACES PROVIDED

Do not write outside the box

2 2 A capacitor with an initial potential difference V_0 was discharged through a resistor.

The graph shows the variation of current in the circuit with time.

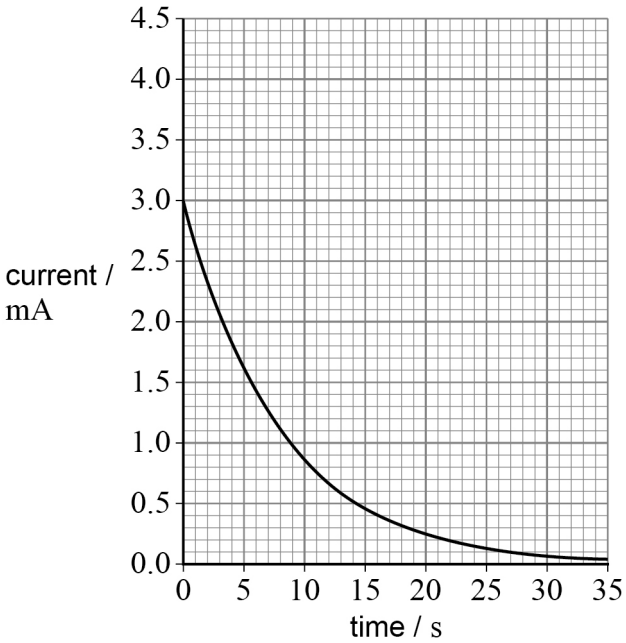

The capacitor was again discharged from V_0 through a second resistor of smaller resistance.

Which graph shows the variation of current with time for the second resistor?
The dashed line shows the variation for the first resistor.

[1 mark]

Do not write outside the box

A

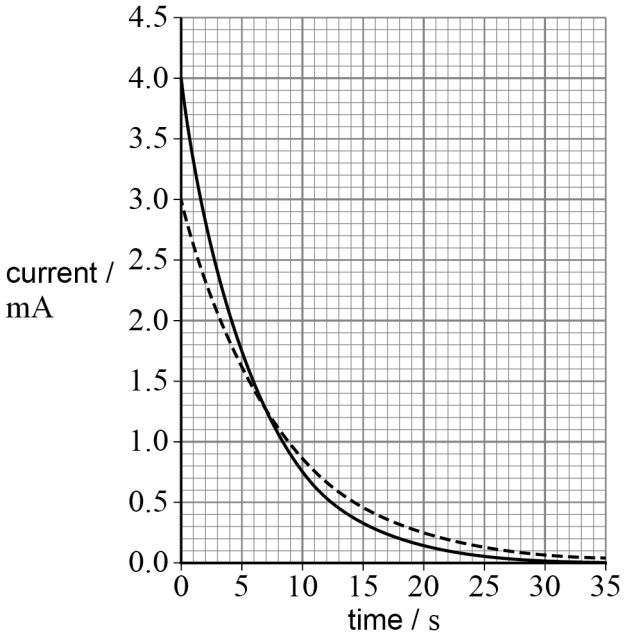

B

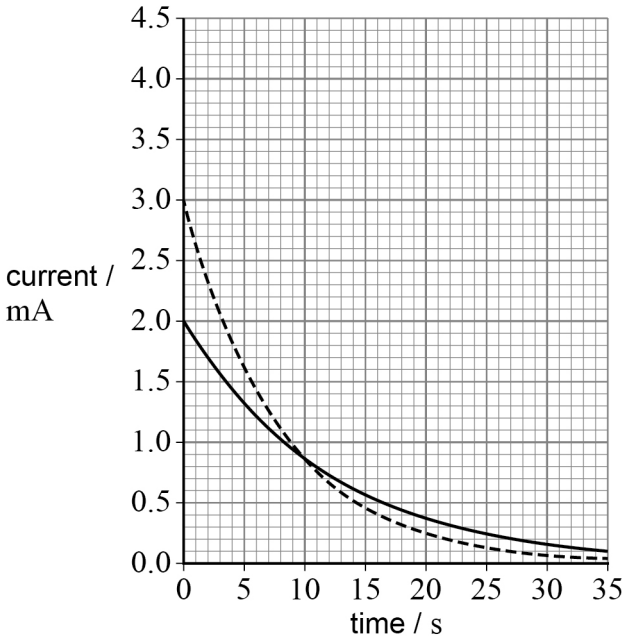

C

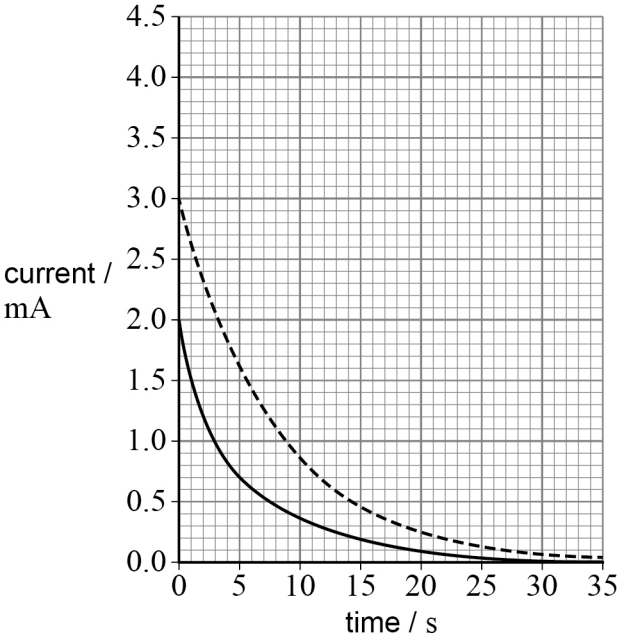

D

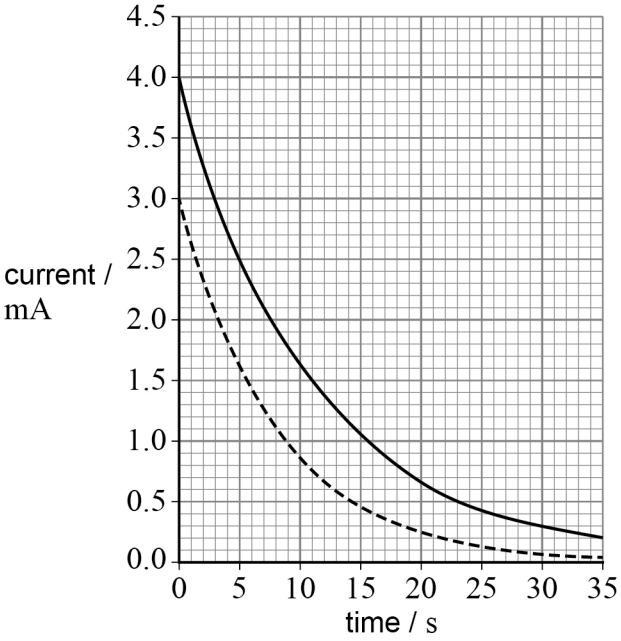

A ⬭

B ⬭

C ⬭

D ⬭

Turn over ►

Do not write outside the box

2 3 A radioactive source contains a nuclide that emits alpha particles. The energy transformed in each decay is $5.5\ \text{MeV}$.

The source initially produces $60\ \mu\text{W}$ of power. The nuclide has a half-life of 90 years.

What is the activity of the source after 270 years?

[1 mark]

A $8.5 \times 10^{6}\ \text{Bq}$

B $1.7 \times 10^{7}\ \text{Bq}$

C $2.3 \times 10^{7}\ \text{Bq}$

D $8.5 \times 10^{9}\ \text{Bq}$

2 4 Some students model radioactive decay using 320 dice.
Each dice has eight faces.
The probability of a dice landing on each face is equal.

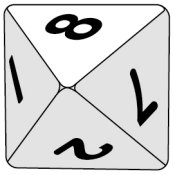

The students roll the 320 dice into a tray.
The students remove all the dice that land with the number 8 facing up.
They repeat this process with the remaining dice.

How many dice should the students expect in the tray after a total of 4 rolls?

[1 mark]

A 20

B 40

C 190

D 210

Do not write outside the box

2 5 The diagram shows equipment used to investigate the force produced by a current in a wire that is in a uniform magnetic field. The wire is fixed and cannot move.

Each magnet is 5 cm long and the magnetic flux density of the field between the magnets is 120 mT.

The north pole of one magnet is labelled in the diagram.

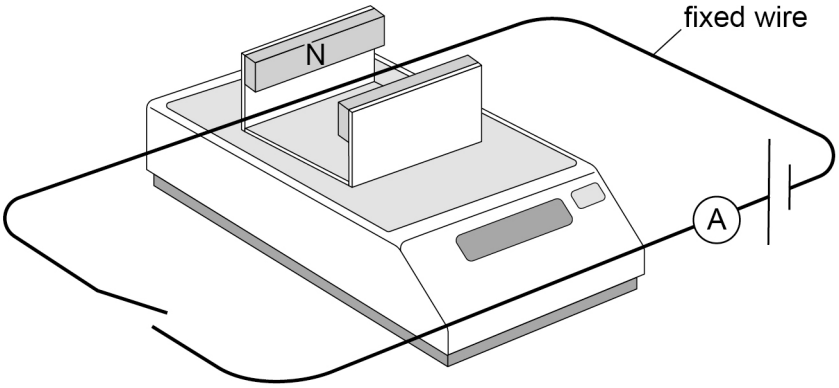

The mass balance reads zero when there is no current in the wire.

What is the reading, in gram, on the mass balance when the current is 2.0 A?

[1 mark]

A −1.2 ⬭

B −0.12 ⬭

C +0.12 ⬭

D +1.2 ⬭

2 6 What is the fundamental (base) SI unit for magnetic flux density?

[1 mark]

A $kg\ A^{-1}\ s^{-2}$ ⬭

B $kg\ A^{-1}\ s^{2}$ ⬭

C $kg\ C^{-1}\ s^{-3}$ ⬭

D $kg\ m\ A^{-1}\ s^{-2}$ ⬭

Do not write outside the box

2 7 An electron enters a uniform electric field between two parallel plates.

The initial velocity of the electron is parallel to the plates.

The acceleration of the electron is always

[1 mark]

A perpendicular to the instantaneous velocity.

B perpendicular to the electric field strength.

C in the same direction as the electric field strength.

D in the opposite direction to the electric field strength.

2 8 A proton and an alpha particle have the same kinetic energy.

The proton and the alpha particle enter a uniform magnetic field at $90°$ to the magnetic field lines. Both particles experience a force due to their motion in the magnetic field.

What is $\dfrac{\text{the magnitude of the force on the proton}}{\text{the magnitude of the force on the alpha particle}}$?

[1 mark]

A 0.25

B 0.50

C 1

D 2

Do not write outside the box

2 9 The diagram shows the end view of a rectangular coil in a uniform magnetic field of flux density $70\ \mathrm{mT}$.

The plane of the coil makes an angle of $20°$ to the magnetic field lines.
The coil has 50 turns and an area of $0.035\ \mathrm{m}^2$.

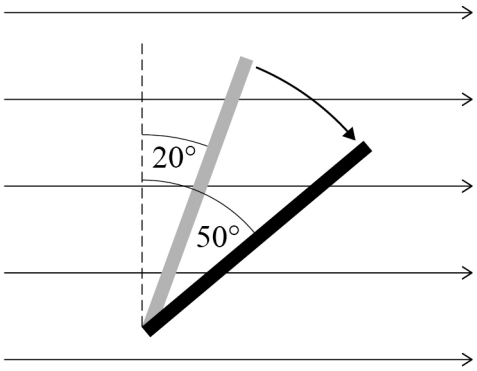

The coil is rotated so that the plane of the coil makes an angle of $50°$ to the magnetic field lines.

As a result of this change, the magnetic flux linkage

[1 mark]

A decreases by 3.6×10^{-2} Wb. ⬭

B decreases by 1.1×10^{-1} Wb. ⬭

C increases by 3.6×10^{-2} Wb. ⬭

D increases by 1.1×10^{-1} Wb. ⬭

Turn over for the next question

Do not write outside the box

3 0 A metal rod falls at a constant velocity perpendicular to a uniform magnetic field. An emf is induced between the ends of the rod, **P** and **Q**.

The rod is 20 cm long and travels 60 cm through the field in 0.5 s.
The magnetic flux density is 400 mT.

View from above **Side view**

Which row shows the emf induced across the ends of the rod and the polarity of end **P** and end **Q**?

[1 mark]

	emf / mV	Polarity of P	Polarity of Q	
A	48	Positive	Negative	⬭
B	96	Positive	Negative	⬭
C	48	Negative	Positive	⬭
D	96	Negative	Positive	⬭

Do not write outside the box

Turn over for the next question

DO NOT WRITE ON THIS PAGE
ANSWER IN THE SPACES PROVIDED

Do not write outside the box

3 1 A coil of wire rotates at a constant angular speed ω in a uniform magnetic field. The graph shows the variation with time of the emf induced in the coil.

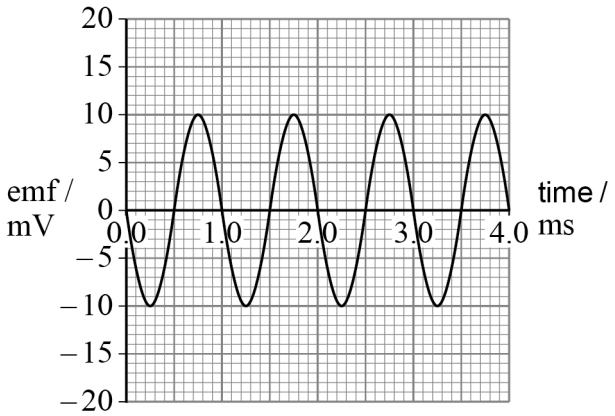

The angular speed of the coil is changed to $\frac{3\omega}{2}$.

Which graph shows the new variation with time of the emf induced in the coil?

[1 mark]

Do not write outside the box

A

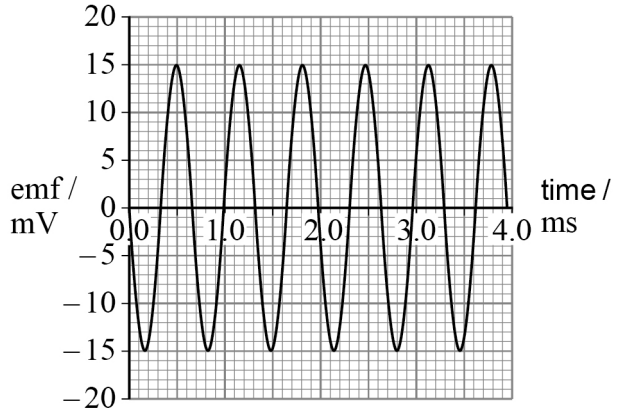

B

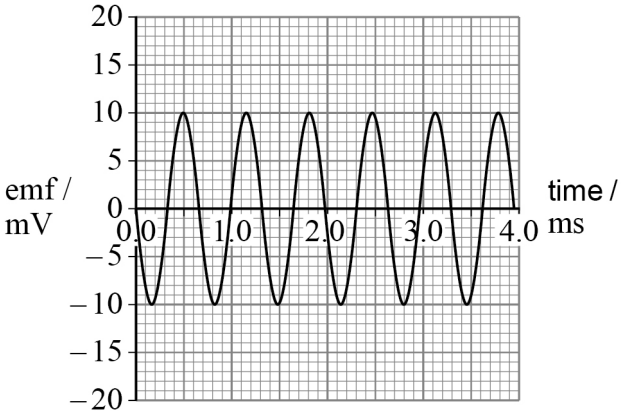

C

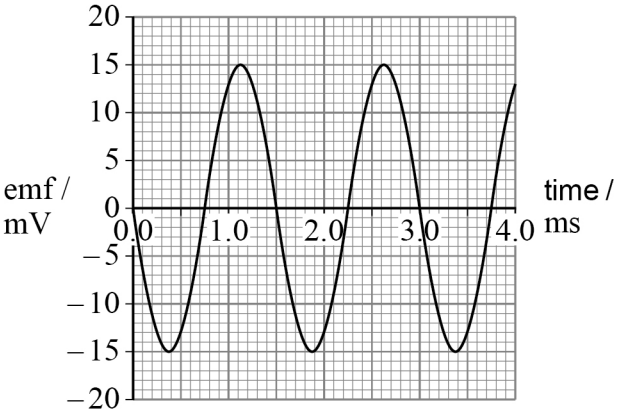

D

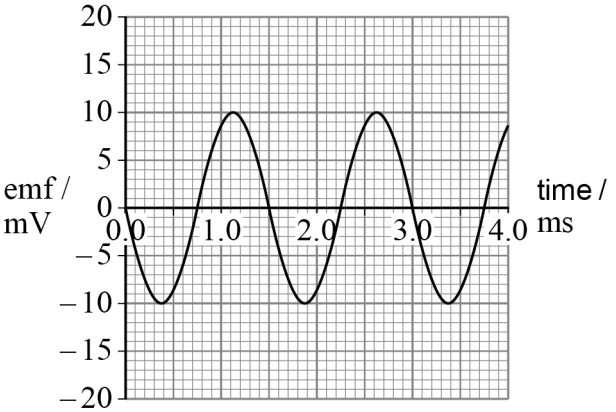

A ⬭

B ⬭

C ⬭

D ⬭

Turn over for the next question

Do not write outside the box

Questions **32** and **33** are about using an oscilloscope to show an ac waveform from an ac source. The oscilloscope screen is represented below.

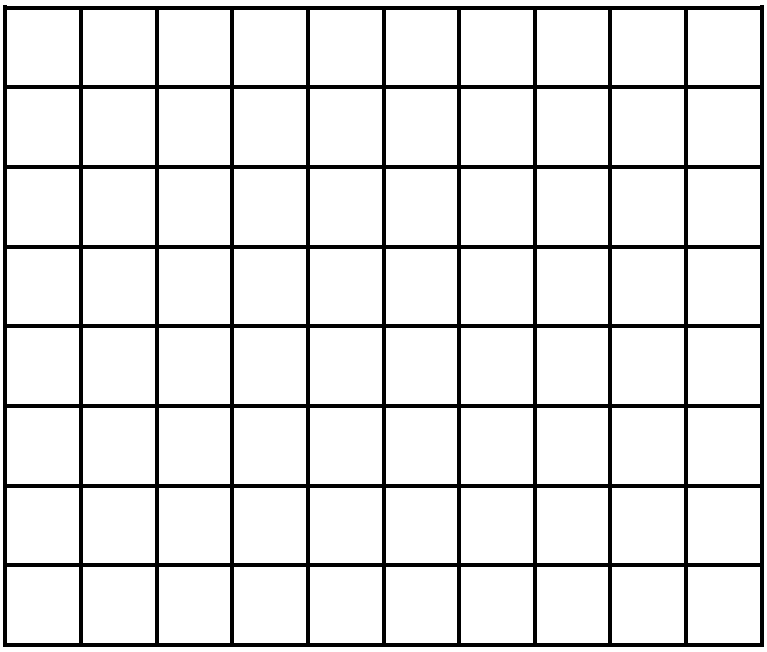

3 2 The frequency of the ac source is 200 Hz.

Which time-base setting on the oscilloscope will display **only two** complete waveforms on the screen?

[1 mark]

A 1 ms cm^{-1} ⬭

B 2 ms cm^{-1} ⬭

C 5 ms cm^{-1} ⬭

D 10 ms cm^{-1} ⬭

Do not write outside the box

3 3 The root mean square voltage of the ac source is 40 V.

Which volts / division setting on the oscilloscope will display the largest complete waveform?

[1 mark]

A 5 volts / division ⬭

B 10 volts / division ⬭

C 20 volts / division ⬭

D 50 volts / division ⬭

3 4 Which of these does **not** increase the efficiency of a transformer?

[1 mark]

A Increasing the diameter of the wire of the secondary coil. ⬭

B Overlapping the primary coil with the secondary coil. ⬭

C Using a steel core instead of an iron core. ⬭

D Using a core of thin insulated metal sheets. ⬭

3 5 A **step-up** transformer is 100% efficient.

What is a possible set of values for the transformer?

[1 mark]

	N_p	V_p	N_s	V_s	
A	300	150	100	50	⬭
B	150	300	100	50	⬭
C	100	150	300	50	⬭
D	100	50	300	150	⬭

30

END OF QUESTIONS

Do not write outside the box

There are no questions printed on this page

DO NOT WRITE ON THIS PAGE
ANSWER IN THE SPACES PROVIDED

Do not write outside the box

Question number	**Additional page, if required.** **Write the question numbers in the left-hand margin.**

Do not write outside the box

Question number	**Additional page, if required.** **Write the question numbers in the left-hand margin.**

Do not write outside the box

Question number	**Additional page, if required.** **Write the question numbers in the left-hand margin.**

Do not write outside the box

Question number	**Additional page, if required.** **Write the question numbers in the left-hand margin.**

Do not write outside the box

Question number	**Additional page, if required.** **Write the question numbers in the left-hand margin.**

Do not write outside the box

There are no questions printed on this page

DO NOT WRITE ON THIS PAGE
ANSWER IN THE SPACES PROVIDED

Copyright information

For confidentiality purposes, acknowledgements of third-party copyright material are published in a separate booklet rather than including them on the examination paper or support materials. This booklet is published after each examination series and is available for free download from www.oxfordaqaexams.org.uk after the live examination series.

Permission to reproduce all copyright material has been applied for. In some cases, efforts to contact copyright-holders may have been unsuccessful and Oxford International AQA Examinations will be happy to rectify any omissions of acknowledgements. If you have any queries please contact the Copyright Team, AQA, Stag Hill House, Guildford, GU2 7XJ.

Copyright © 2019 Oxford International AQA Examinations and its licensors. All rights reserved.