OXFORD AQA
INTERNATIONAL QUALIFICATIONS

Please write clearly in block capitals.

Centre number | | | | | | Candidate number | | | | |

Surname _____

Forename(s) _____

Candidate signature _____
I declare this is my own work.

INTERNATIONAL A-LEVEL
PHYSICS

Unit 5 Physics in practice

Tuesday 21 January 2025 07:00 GMT Time allowed: 2 hours

Materials
For this paper you must have:
- a Data and Formulae Booklet as a loose insert
- a ruler with millimetre measurements
- a scientific calculator, which you are expected to use where appropriate
- a protractor.

Instructions
- Use black ink or black ball-point pen.
- Fill in the boxes at the top of this page.
- Answer **all** questions.
- You must answer the questions in the spaces provided. Do not write outside the box around each page or on blank pages.
- All working must be shown.
- If you need extra space for your answer(s), use the lined pages at the end of this book. Write the question number against your answer(s).
- Do all rough work in this book. Cross through any work you do not want to be marked.

Information
- The marks for questions are shown in brackets.
- The maximum mark for this paper is 80.

For Examiner's Use	
Question	Mark
1	
2	
3	
4	
5	
6	
7	
TOTAL	

Do not write outside the box

Section A

Answer **all** questions in this section.

0 1 This question is about three methods for measuring the magnetic flux density B between two magnets.
The magnets are mounted on a U-shaped frame. The same frame and pair of magnets are used for all three methods.
Assume that the magnetic field in the space between the two magnets is uniform.

Figure 1 shows the apparatus for **Method 1**. The frame and the magnets are placed on a balance. A rigid wire is clamped midway between the magnets so that it is at $90°$ to the magnetic field.

Figure 1

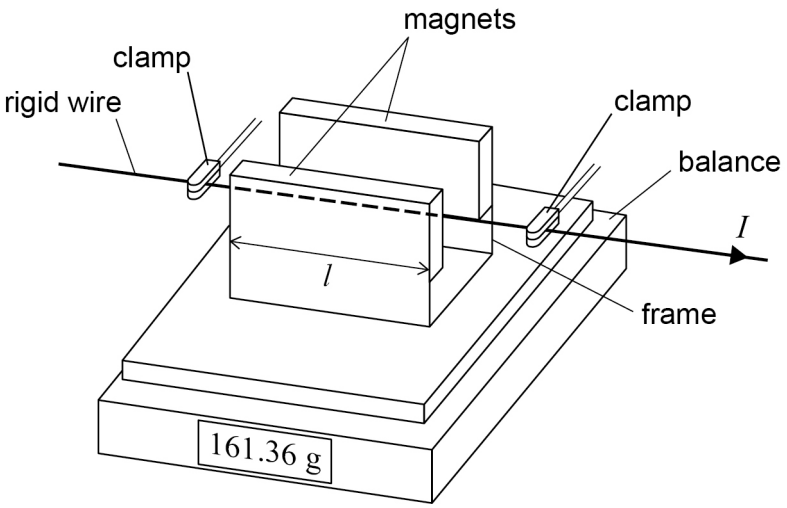

When there is a current I in the wire, a force F acts on the wire due to the magnetic field.
I is measured using a digital ammeter.
The length l of the wire in the magnetic field is measured using a millimetre scale.

0 1 . 1 When there is a current I in the wire, the balance reading is 161.36 g.
When the current is zero, the reading on the balance is 164.27 g.

Deduce the magnitude and direction of F.

[2 marks]

$F =$ _____ N

direction of $F =$ _____

Do not write outside the box

0 1 . 2 Calculate the value of B obtained using **Method 1**.
State your answer to an appropriate number of significant figures.

$l = 71$ mm
$I = 3.62$ A

[2 marks]

$B =$ _____ T

0 1 . 3 The difference between the balance readings is Δm.

State the absolute uncertainty in Δm and in l.

[2 marks]

absolute uncertainty in $\Delta m =$ _____ g

absolute uncertainty in $l =$ _____ mm

Question 1 continues on the next page

Do not write outside the box

In **Method 2**, a circular coil with n turns and a cross-sectional area A is held in the magnetic field midway between the magnets as shown in **Figure 2**.
The coil is initially stationary with its plane at right angles to the magnetic field.

Figure 2

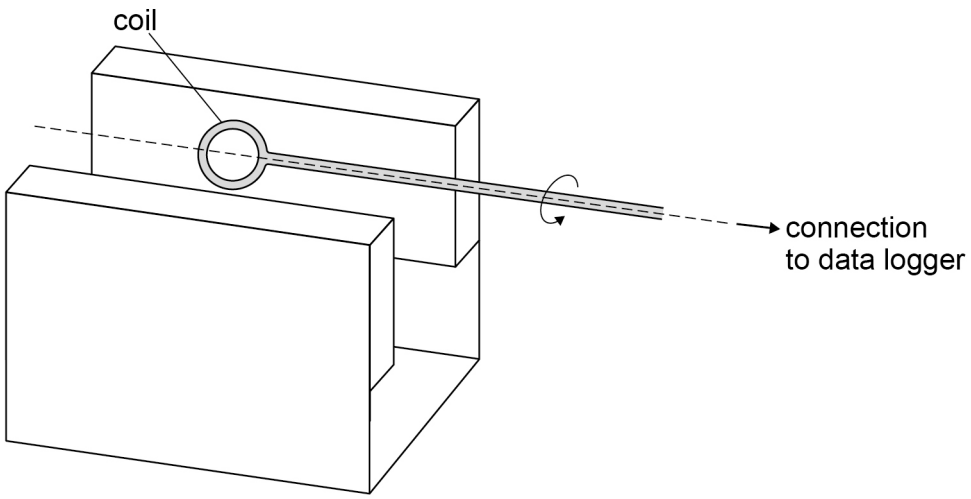

The coil is now rotated at a steady angular speed.

The induced emf ε in the coil is monitored by a data logger.
Figure 3 shows the variation of ε with time t as the coil rotates through $180°$.

Figure 3

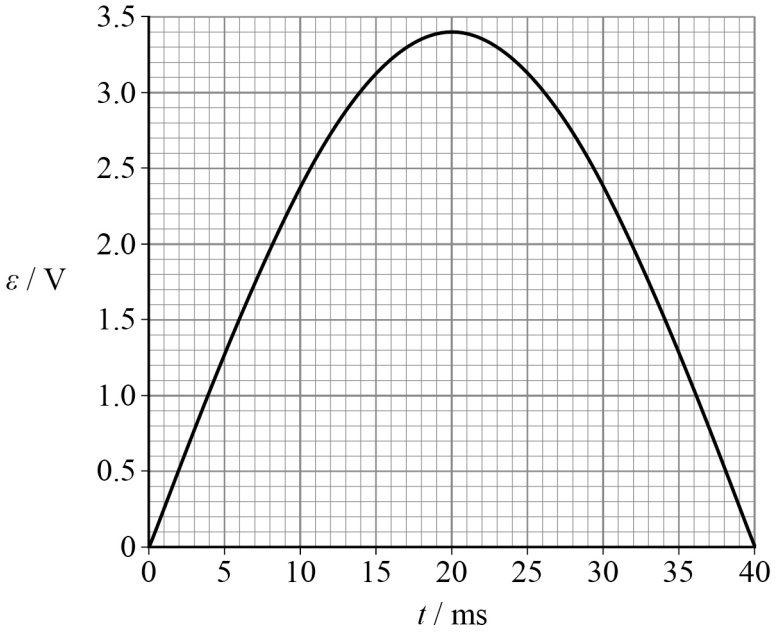

Do not write outside the box

0 1 . 4 Determine the value of B obtained using **Method 2**.

$A = 7.8 \times 10^{-5}\ \text{m}^2$
$n = 5000$

[3 marks]

$B =$ _____ T

Question 1 continues on the next page

Do not write outside the box

In **Method 3**, a digital electronic probe is used to take direct repeated readings of B, as shown in **Figure 4**.

Figure 4

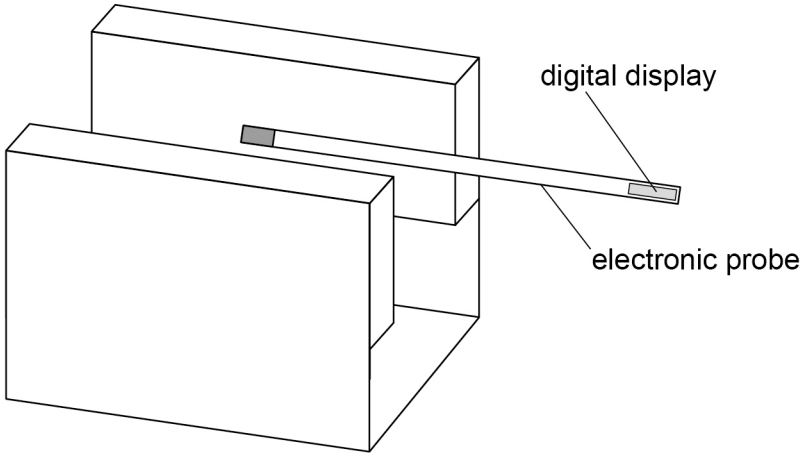

0 1 . 5 **Table 1** gives values of B obtained with **Method 3**.

Table 1

B / T	0.118	0.108	0.089	0.113	0.112	0.115

Determine the value of B for this set of readings.
Go on to state the absolute uncertainty in B.

[2 marks]

B = _____ T

absolute uncertainty in B = _____ T

Do not write outside the box

0 1 . 6 When using **Method 1**, the uncertainty in B is approximately 2%.
When using **Method 2**, the uncertainty in A is 10%.

Deduce whether **Method 1**, **Method 2** or **Method 3** gives the smallest percentage uncertainty in B.

[2 marks]

13

Turn over for the next question

Do not write outside the box

0 2 A student uses the apparatus shown in **Figure 5** to investigate the charging of a capacitor through a resistor.

Figure 5

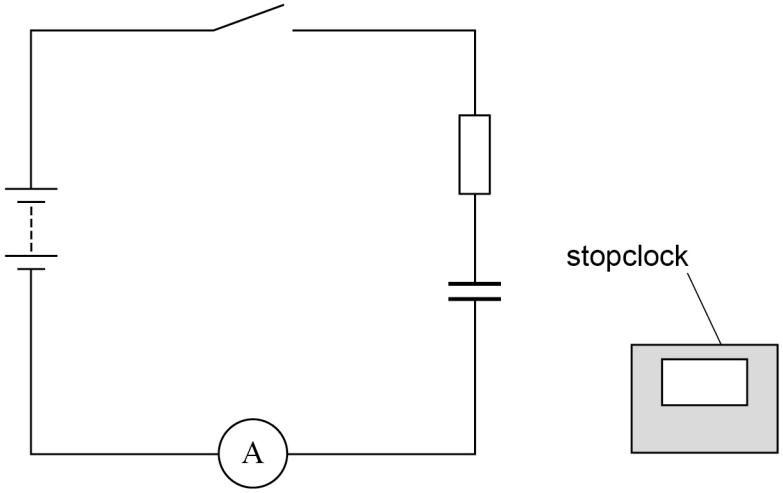

The capacitor is initially uncharged. The student closes the switch and starts the stopclock.
The student records values of time t and current I as the capacitor charges.
Table 2 shows the student's values.

Table 2

t / s	I / μA
5.0	108
25.0	70
45.0	46
65.0	30
85.0	20

Do not write outside the box

0 2 . 1 Draw, on **Figure 6**, a graph to show the variation of I with t.

[4 marks]

Figure 6

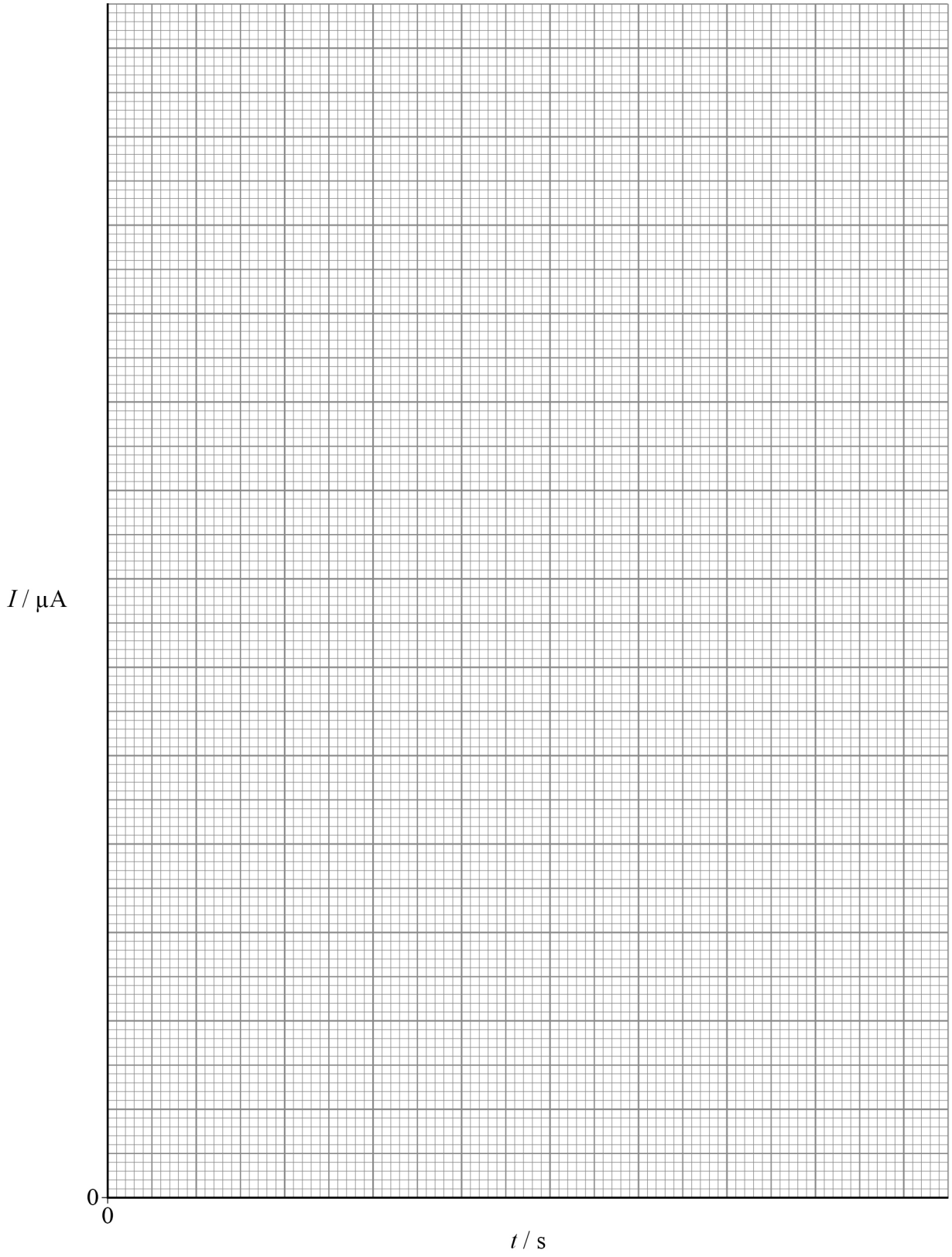

Do not write outside the box

0 2 . 2 The student knows the resistance R of the resistor.
She uses the same data to draw a graph of $\ln I$ against t.

Explain how she can use the graph of $\ln I$ against t to determine the capacitance C of the capacitor.

[3 marks]

7

Do not write outside the box

0 3 **Figure 7** shows an electric motor being used to raise a load of mass m.

Figure 7

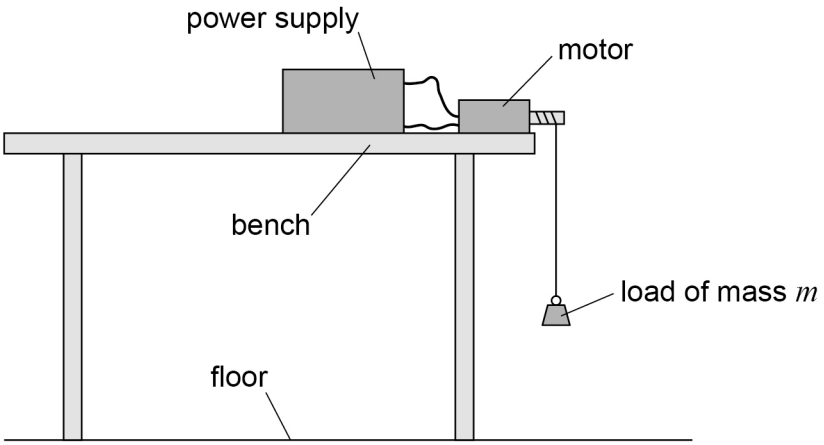

A student plans to investigate how the efficiency η of the motor varies with the mass m of the load at a constant supply voltage.
The student plans to vary m from $0.10\ \text{kg}$ to $0.60\ \text{kg}$ in increments of $0.10\ \text{kg}$.

0 3 . 1 Describe how the student should perform the investigation using the apparatus shown in **Figure 7** and any other necessary equipment.

In your answer, describe how to:
- make the necessary measurements
- perform the investigation accurately
- process the results in order to plot a graph of η against m.

You may draw a diagram to help your description.

[6 marks]

Question 3 continues on the next page

Do not write outside the box

Do not write outside the box

0 3 . 2 **Figure 8** shows the student's plot of η against m.

Figure 8

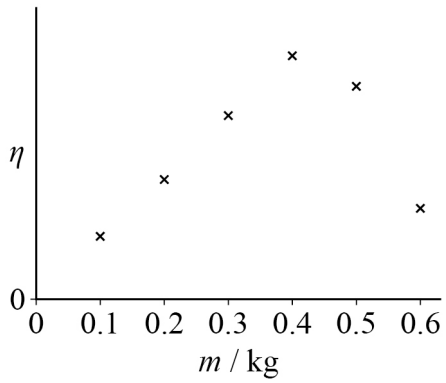

The student wants to determine the maximum efficiency η_{max} of the motor.

Suggest how the student can improve the data collection to find an accurate value for η_{max}.

[2 marks]

0 3 . 3 The current in the motor increases as m increases.

Suggest why η is smaller for large values of m.

[1 mark]

9

Do not write outside the box

0 4 **Figure 9** shows apparatus used to verify the inverse-square law for γ radiation.

Figure 9

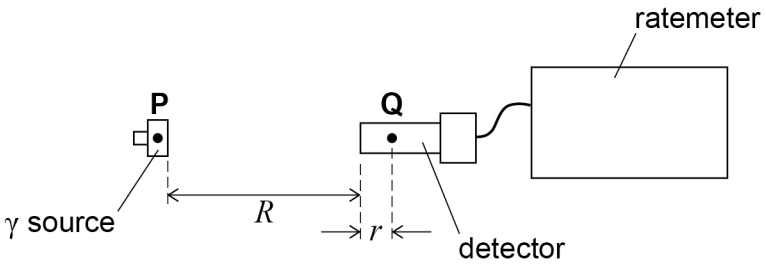

The γ rays are emitted from point **P** inside the γ source. **P** acts as a point source. The average position where γ rays are detected is at point **Q**, a distance r from the front face of the detector.

The count rate is measured for a distance R between the source and the detector. The corrected count rate C is determined.
C is determined for a range of values of R.

Figure 10 is a plot of R against $\frac{1}{\sqrt{C}}$.

Error bars indicate the uncertainties in the data for $\frac{1}{\sqrt{C}}$.

The uncertainty in measurements of R is negligible.

Do not write outside the box

0 4 . 1 Draw, on **Figure 10**, lines with the minimum and maximum gradients consistent with the data.

[2 marks]

Figure 10

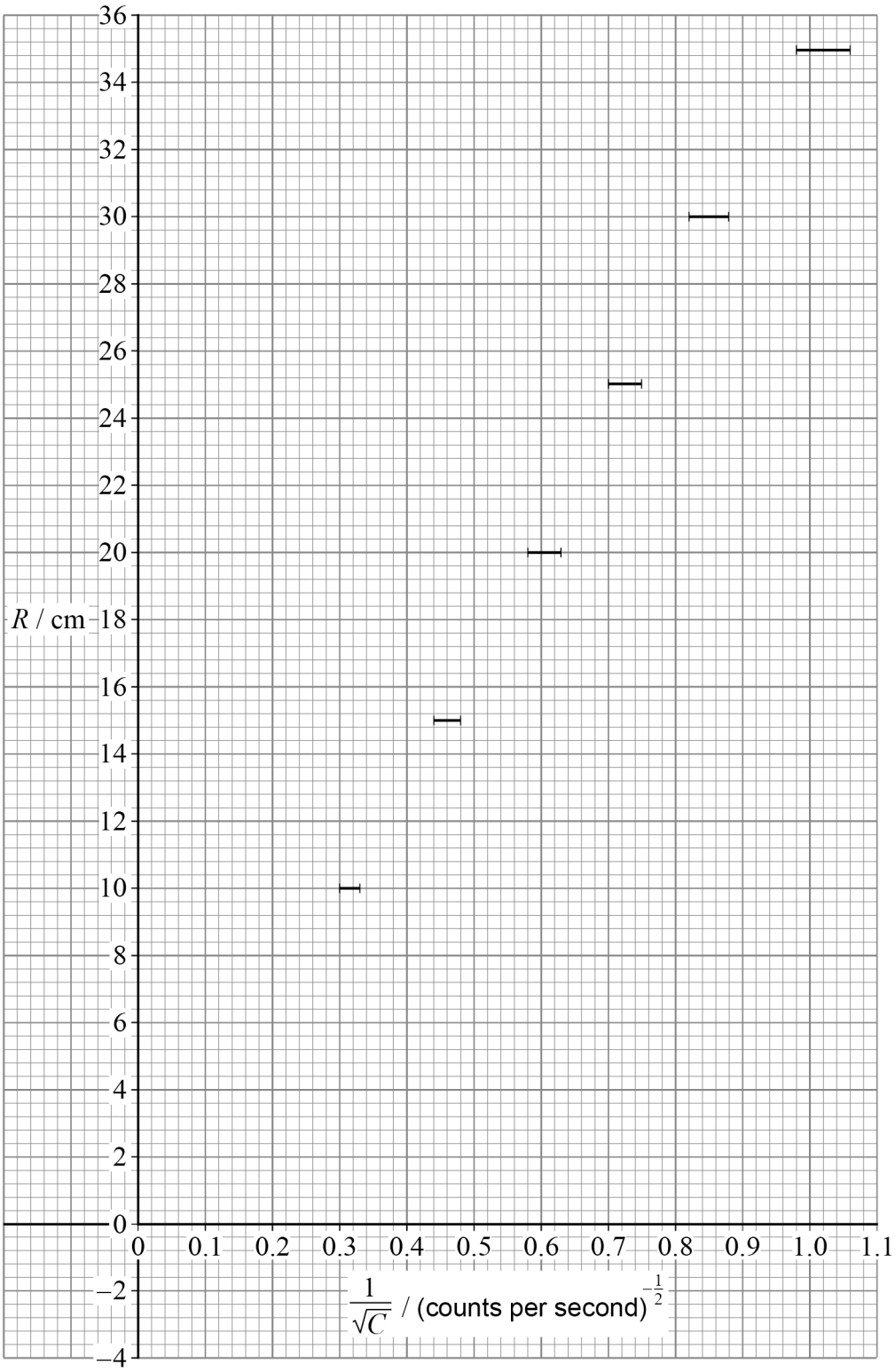

Question 4 continues on the next page

Do not write outside the box

The equation of the graph is $R = \frac{k}{\sqrt{C}} - r$

0 4 . 2 Determine a mean value for r and a value for the absolute uncertainty in r.

[3 marks]

$r =$ _____ cm

uncertainty in $r =$ _____ cm

0 4 . 3 Explain how the data in **Figure 10** support the inverse-square law for γ radiation.

[2 marks]

_____

_____

_____

7

END OF SECTION A

Do not write outside the box

Section B

Answer **all** questions in this section.

0 5 A power cable has a central steel wire fixed to six aluminium wires.
Figure 11 shows the structure of the power cable.

Figure 11

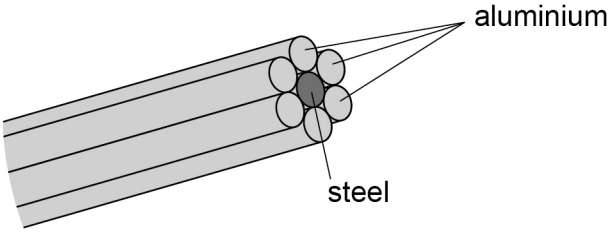

For this cable:
length = 68 m
cross-sectional area of each wire = 1.05×10^{-5} m^2
total mass of steel in the cable = 5.62 kg
total mass of aluminium in the cable = 11.6 kg.

Table 3 shows properties of the steel and the aluminium.

Table 3

	Resistivity / Ω m	**Young modulus / Pa**	**Specific heat capacity / J kg^{-1} K^{-1}**
steel	6.9×10^{-7}	2.1×10^{11}	502
aluminium	2.8×10^{-8}	7.0×10^{10}	921

The initial resistance of the central steel wire is 4.47 Ω.

0 5 . 1 Calculate the initial total resistance of the cable.

[3 marks]

resistance = _____ Ω

Question 5 continues on the next page

Do not write outside the box

When a current is turned on in the cable, the initial power generated in the cable only heats the cable.

The initial potential difference across the length of the cable is $0.91\ \mathrm{V}$.

0 5 . 2 Calculate the initial power generated in the **central steel wire** of the cable.

[1 mark]

initial power generated = _____ W

0 5 . 3 The central steel wire of the cable has an initial rate of temperature increase of $\frac{\Delta\theta}{\Delta t}$.

Calculate $\frac{\Delta\theta}{\Delta t}$.

[2 marks]

$\frac{\Delta\theta}{\Delta t}$ = _____ $\mathrm{K\ s^{-1}}$

Do not write outside the box

0 5 . 4 The initial rate of temperature increase for the aluminium is very much greater than the initial rate of temperature increase for the steel.

Explain this using data from page 17.

[3 marks]

0 5 . 5 Eventually, the current in the cable reaches a constant value.

Explain why the cable eventually reaches a steady temperature.

[1 mark]

Question 5 continues on the next page

Do not write outside the box

Figure 12 shows the cable attached to posts **A** and **B**.

Figure 12

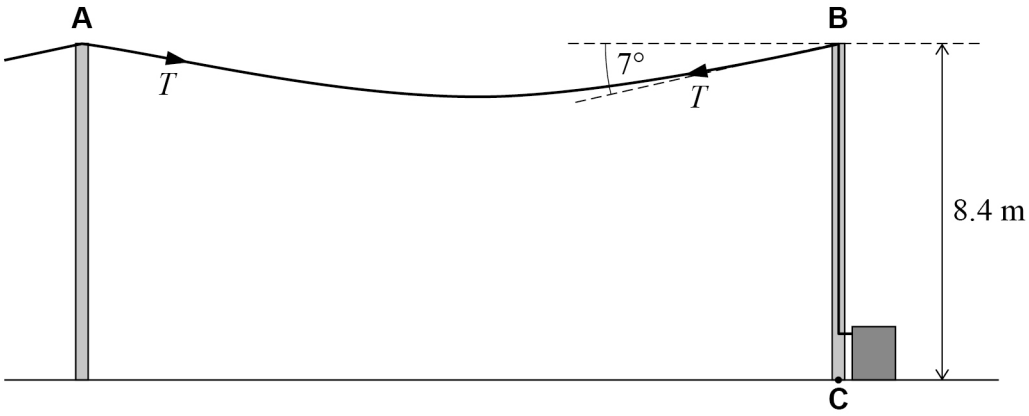

The magnitude of the tension T in the cable is $693\ \mathrm{N}$.
Assume that T is constant everywhere along the cable between **A** and **B**.

The strain in the aluminium wires is the same as the strain in the steel wire.

0 5 . 6 Explain why all the wires have the same strain.

[1 mark]

0 5 . 7 Show that the tension in the steel part of the cable is 50% of the total tension in the aluminium part of the cable.

[2 marks]

Do not write outside the box

0 5 . 8 Calculate the extension of the cable due to T.

[3 marks]

extension = _____ m

0 5 . 9 The cable makes an angle of $7°$ to the horizontal at **B** as shown in **Figure 12**.

Determine the moment of T about point **C** shown on **Figure 12**.

[2 marks]

moment = _____ N m

0 5 . 1 0 The moment exerted by the cable on **B** changes when weather conditions change.

State and explain, for **one** weather condition, how this change in moment occurs.

[1 mark]

_____

_____

_____

19

Do not write outside the box

0 6 **Figure 13** shows an arrangement to find the height h of a block **Q**.

Two blocks **P** and **Q** are placed on a flat horizontal surface. A glass plate rests on **P** and **Q**.
The width x of **P** and the distance d between the right-hand edges of **P** and **Q** are accurately known. The height of **P** is known to be H.

Figure 13

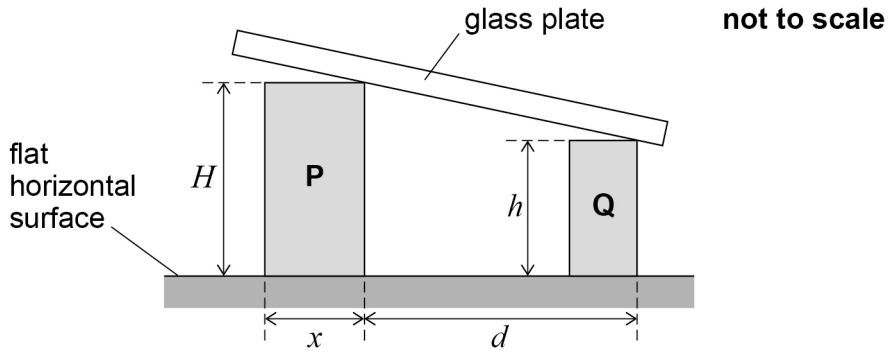

A ray of light from a monochromatic source is incident on the top of the glass plate, as shown in **Figure 14**. At **B** this ray splits into two rays, **ABE** and **ABCDE**.

Figure 14 shows an enlarged view of the top of **P** and the two rays.
Horizontal distances are exaggerated to make the paths of the rays clear.

Figure 14

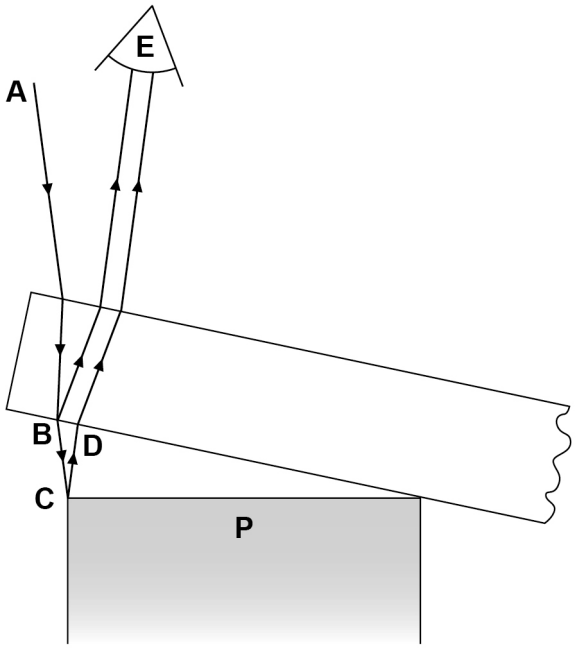

Do not write outside the box

ABE is reflected from the lower surface of the glass plate at **B**.

ABCDE is transmitted at **B** and reflected from the top of **P** at **C**.

t is the mean of the distances **BC** and **CD**.
ABCDE travels a distance $2t$ more than ray **ABE**.

ABE and **ABCDE** meet and superpose in an observer's eye **E**.

0 6 . 1 State what is meant by coherence.

[2 marks]

0 6 . 2 Explain why **ABE** and **ABCDE** are coherent.

[1 mark]

0 6 . 3 Light travelling along **ABCDE** has a phase change of π rad when it reflects at **C**.

Deduce whether a dark fringe or a bright fringe is observed by the eye when $t = 24\lambda$.

[2 marks]

Question 6 continues on the next page

Do not write outside the box

The interference of the light is used to compare h with H.

0 6 . 4 There are 48 complete sets of interference fringes across the width of **P**.

Show, using similar triangles, that $h = H - \frac{24\lambda d}{x}$

[2 marks]

0 6 . 5 The light has a frequency of 462.000 THz.

Calculate h.

$H = 150.000$ mm
$x = 50.0000$ mm
$d = 147.200$ mm
$c_{air} = 2.99705 \times 10^8$ m s^{-1}

[2 marks]

$h =$ _____ m

0 6 . 6 The light source is replaced with one that emits light with a higher frequency.

Deduce how the number of observable fringes across the width of **P** changes.

[2 marks]

_____

_____

_____

_____

11

Do not write outside the box

0 7 This question is about aspects of global warming and the greenhouse effect.

Oceans cover an area of 3.6×10^8 km^2 of the Earth's surface and have a volume of 1.3×10^9 km^3. Assume that the surface area of the oceans remains constant.

0 7 . 1 Estimate, in m, the mean depth of the Earth's oceans.

[1 mark]

mean depth = _____ m

0 7 . 2 During the last 100 years, the mean depth of the oceans has increased by approximately 6 cm due to the melting of ice on land.

Estimate the energy required to melt sufficient ice at 0 °C to cause this increase in depth.
Ignore thermal expansion in this part of the question.

mean density of water from land ice = 1.0×10^3 kg m^{-3}
specific latent heat of ice = 3.34×10^5 J kg^{-1}

[3 marks]

energy = _____ J

Question 7 continues on the next page

Do not write outside the box

0 7 . 3 The mean depth of the oceans has increased by approximately 12 cm because water expands as its temperature increases.
This thermal expansion only happens in the top layer of the oceans. The top layer has a thickness of 1000 m.

During the last 100 years, the water in this top layer has expanded by an average of 0.0020% for every 0.100 K increase in temperature.

Estimate the increase in temperature of the top layer during this time period.

[2 marks]

increase in temperature = _____ K

Figure 15 shows the variation of the density of seawater with temperature between 0 °C and 12 °C.

Figure 15

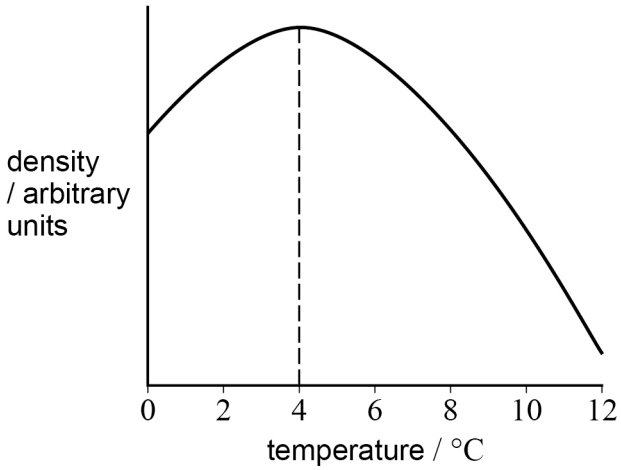

0 7 . 4 The surface of the oceans is heated by solar radiation.
Only the top layer of the oceans changes significantly in volume due to thermal expansion.

Suggest **one** reason why this is true.

[1 mark]

_____

_____

_____

Do not write outside the box

The atmosphere is transparent to most of the solar radiation that is incident on the Earth.
As a result, the surface of the Earth warms up and energy is emitted upwards from the surface through the atmosphere.

For this emitted radiation, the peak intensity occurs at a wavelength of λ_{peak}.
λ_{peak} is given by:

$$\lambda_{peak} = \frac{C}{T}$$

where

λ_{peak} for the Earth's surface is approximately 10^4 nm

T is the average absolute temperature of the Earth's surface

C is a constant.

0 7 . 5 Estimate C.
Give an appropriate unit for your answer.

[2 marks]

C = _____

unit = _____

Question 7 continues on the next page

Do not write outside the box

Radiation of wavelength λ_{peak} is absorbed by carbon dioxide molecules in the atmosphere. The molecules gain energy as a result.

0 7 . 6 The carbon dioxide in the atmosphere is at a temperature of $-40\ ^{\circ}C$.
A carbon dioxide molecule in the gas absorbs a photon of wavelength 1.00×10^4 nm.

Compare the energy absorbed by the molecule with the initial average molecular kinetic energy of the gas.
Assume that carbon dioxide behaves as an ideal gas.

[3 marks]

0 7 . 7 Carbon dioxide molecules can lose this energy by the emission of one or more photons of radiation.

One cause of the greenhouse effect is that the energy of these photons is trapped in the atmosphere.

Suggest **two** reasons why this energy can become trapped in the atmosphere.

[2 marks]

1

2

14

END OF QUESTIONS

Do not write outside the box

There are no questions printed on this page

DO NOT WRITE ON THIS PAGE
ANSWER IN THE SPACES PROVIDED

Do not write outside the box

Question number	**Additional page, if required.** **Write the question numbers in the left-hand margin.**

Do not write outside the box

Question number	**Additional page, if required.** **Write the question numbers in the left-hand margin.**

Do not write outside the box

Question number	**Additional page, if required.** **Write the question numbers in the left-hand margin.**

Copyright information

For confidentiality purposes, all acknowledgements of third-party copyright material are published in a separate booklet. This booklet is published after each live examination series and is available for free download from www.oxfordaqa.com

Permission to reproduce all copyright material has been applied for. In some cases, efforts to contact copyright-holders may have been unsuccessful and OxfordAQA will be happy to rectify any omissions of acknowledgements. If you have any queries please contact the Copyright Team.

Copyright © 2025 OxfordAQA International Examinations and its licensors. All rights reserved.