OXFORD AQA
INTERNATIONAL QUALIFICATIONS

Please write clearly in block capitals.

Centre number | | | | | | Candidate number | | | | |

Surname _____

Forename(s) _____

Candidate signature _____
I declare this is my own work.

INTERNATIONAL A-LEVEL
PHYSICS

Unit 5 Physics in practice

Thursday 18 January 2024 07:00 GMT Time allowed: 2 hours

Materials
For this paper you must have:
- a Data and Formulae Booklet as a loose insert
- a ruler with millimetre measurements
- a scientific calculator, which you are expected to use where appropriate
- a protractor.

Instructions
- Use black ink or black ball-point pen.
- Fill in the boxes at the top of this page.
- Answer **all** questions.
- You must answer the questions in the spaces provided. Do not write outside the box around each page or on blank pages.
- All working must be shown.
- If you need extra space for your answer(s), use the lined pages at the end of this book. Write the question number against your answer(s).
- Do all rough work in this book. Cross through any work you do not want to be marked.

Information
- The marks for questions are shown in brackets.
- The maximum mark for this paper is 80.

For Examiner's Use	
Question	Mark
1	
2	
3	
4	
5	
6	
7	
8	
TOTAL	

Do not write outside the box

Section A

Answer **all** questions in this section.

0 1 . 1 Describe how to reduce the effect of random errors on a set of measurements.

[1 mark]

A student measures the length l of a simple pendulum six times using a metre ruler.

Table 1 shows her measurements.

Table 1

l / cm	89.4	89.3	89.5	89.4	89.4	89.5

0 1 . 2 Calculate the mean value of l.

[1 mark]

mean value of l = _____ cm

The student makes repeated measurements of the time for ten oscillations of the simple pendulum.
She calculates that the mean period for one oscillation is $1.95\ \text{s} \pm 1\%$.

0 1 . 3 Comment on whether the student's measurements of time are precise.

[1 mark]

Do not write outside the box

The student uses her measurements to determine a value for g.

0 1 . 4 Deduce whether the student's measurements are accurate.

[2 marks]

0 1 . 5 The percentage uncertainty in l is 0.1%.

Another student suggests that there is a systematic error in some of the data.

Discuss the evidence for this suggestion.

[1 mark]

6

Turn over for the next question

Do not write outside the box

0 2 Two students **A** and **B** used the apparatus shown in **Figure 1** to determine the count rate from radioactive sources.
The activities of the sources did not vary during the determination.

Figure 1

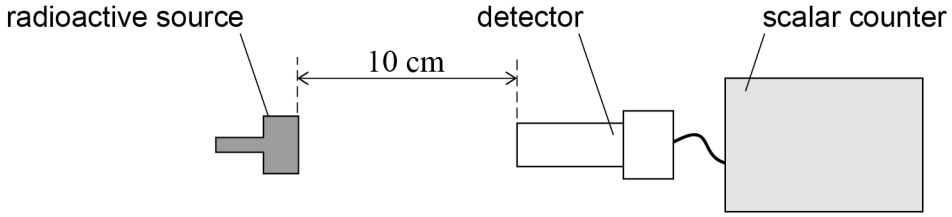

Both students used the same apparatus and placed the detector $10\ \text{cm}$ from the source. Each student measured the radioactive count for a time t.

Table 2 shows the measurements made by the two students.

Table 2

	Count	t / s
student **A**	464	60 ± 1
student **B**	2150	300 ± 1

When a count is measured as N, the absolute uncertainty in the measurement is $\sqrt{N}$.

Each student calculated the count rate C using the equation:

$$C = \frac{N}{t}$$

The uncertainty in the measurement of the separation of the source and the detector is negligible.

Do not write outside the box

0 2 . 1 State **two** reasons why student **A**'s determination of C has a greater percentage uncertainty than student **B**'s determination of C.

[2 marks]

1 _____

_____

_____

2 _____

_____

_____

0 2 . 2 Deduce, by considering uncertainties, whether the data suggest that both students used the same radioactive source in their determinations of C.

[5 marks]

_____

_____

7

Turn over ►

Do not write outside the box

0 3 **Figure 2** shows apparatus used to determine the number of lines per millimetre on a plane transmission diffraction grating. The laser emits light of wavelength 633 nm.

Figure 2

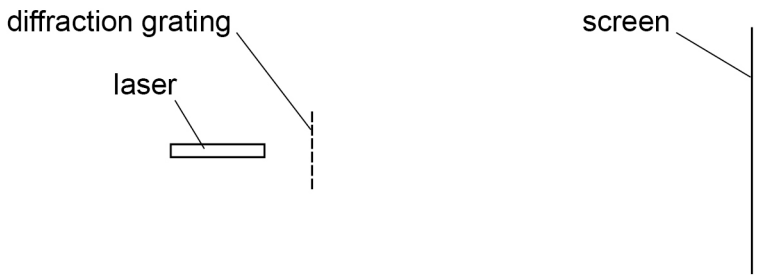

Describe an experiment to determine the number of lines per millimetre on the grating. Refer to the equipment in **Figure 2** and any other necessary equipment.

In your answer you should:

- state the measurements to be made and the steps taken to ensure that the measurements are taken safely
- describe how to process the results
- describe how the experiment should be carried out to ensure accuracy.

[6 marks]

Do not write outside the box

6

Turn over for the next question

Do not write outside the box

0 4 **Figure 3** shows apparatus used to investigate how the current I in a battery varies with the length l of resistance wire connected across its terminals.
The battery has an emf ε of 3.0 V and an internal resistance r.

Figure 3

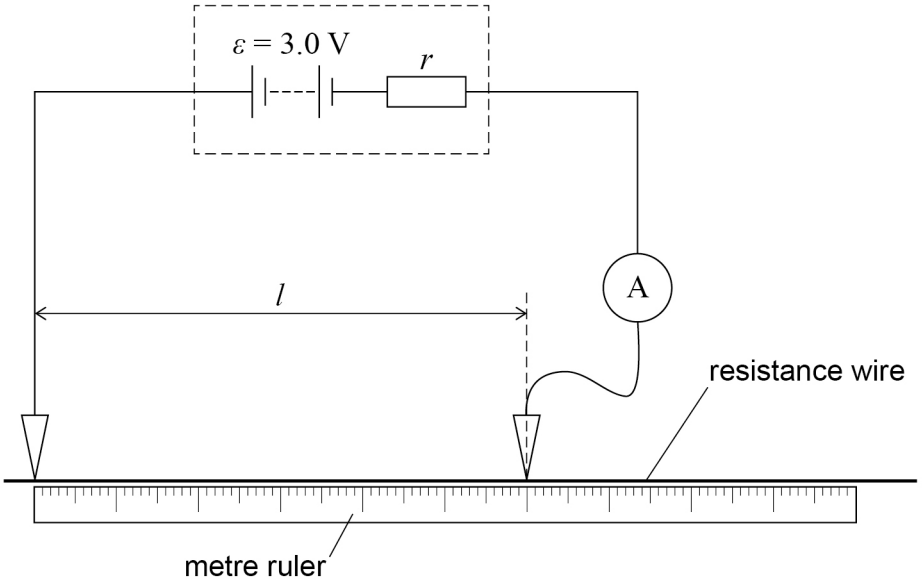

Table 3 shows values of l, I and I^{-1}.

Table 3

l / m	I / A	I^{-1} / A^{-1}
0.100	2.38	0.42
0.300	1.02	0.98
0.500	0.72	1.39
0.700	0.52	1.92
0.900	0.44	2.27

0 4 . 1 Draw, on **Figure 4**, a graph to show the variation of I^{-1} with l.
Draw a best-fit line.

[4 marks]

Do not write outside the box

Figure 4

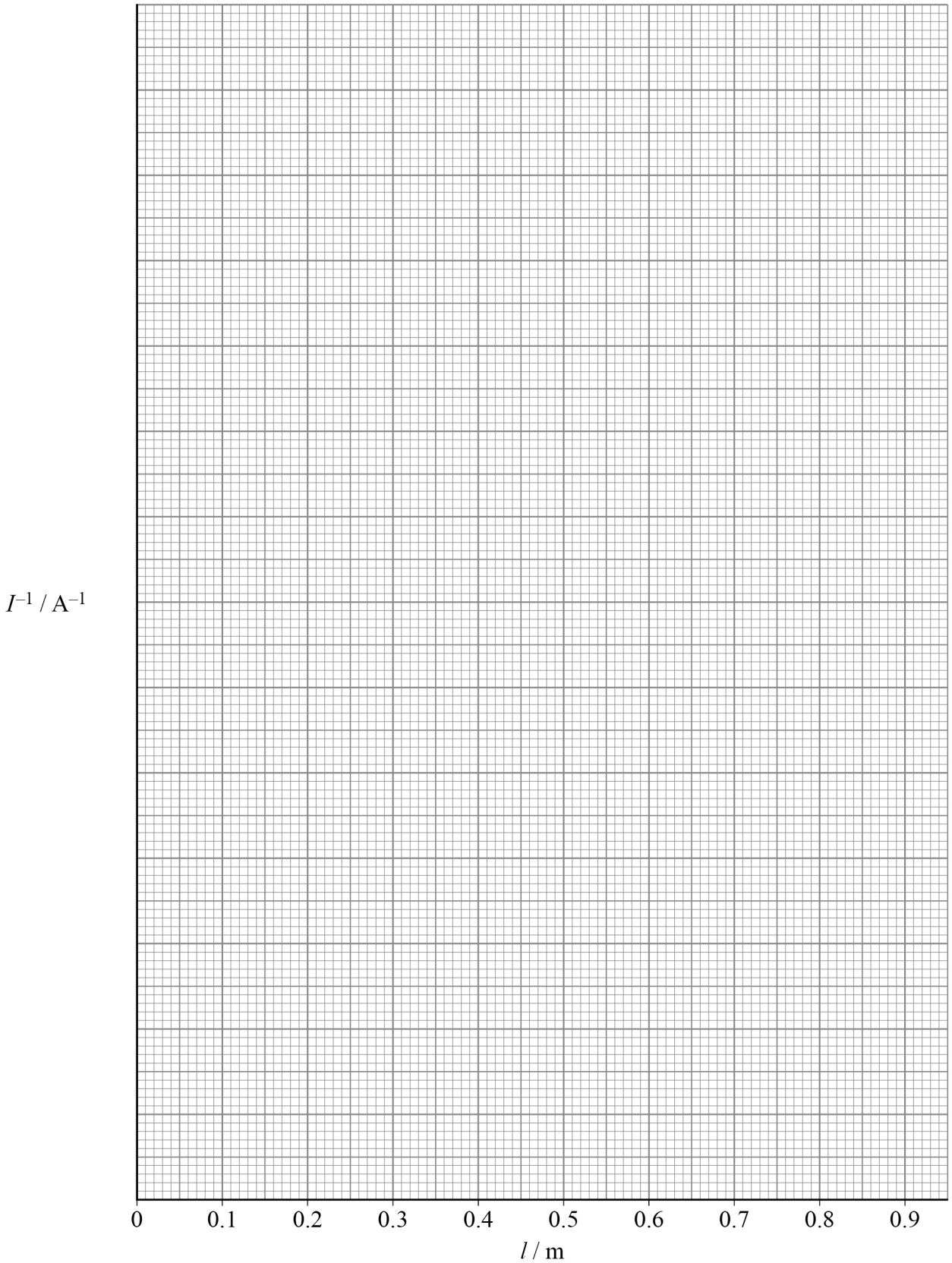

Question 4 continues on the next page

Do not write outside the box

0 4 . 2 Determine the gradient of the graph that you have drawn in **Figure 4**.

[2 marks]

gradient = _____ $A^{-1}\ m^{-1}$

R is the resistance of a length l of the wire.
The equation that relates I to R is:

$$\frac{1}{I} = \frac{R}{\varepsilon} + \frac{r}{\varepsilon}$$

0 4 . 3 The resistance wire has a diameter of $0.457\ \text{mm}$.

Calculate, using your answer to Question **04.2**, the resistivity of the material in the resistance wire.

[3 marks]

resistivity = _____ $\Omega\ m$

0 4 . 4 Calculate r using data from your graph in **Figure 4**.

[2 marks]

r = _____ Ω

11

Do not write outside the box

Turn over for the next question

DO NOT WRITE ON THIS PAGE
ANSWER IN THE SPACES PROVIDED

Do not write outside the box

0 5 Astronomers have measured the orbital period T and the orbital radius r for five planets in the solar system of the star HD 108236.

Figure 5 shows the variation of $\ln(T / \mathrm{s})$ with $\ln(r / \mathrm{m})$ for the astronomers' data.

Figure 5

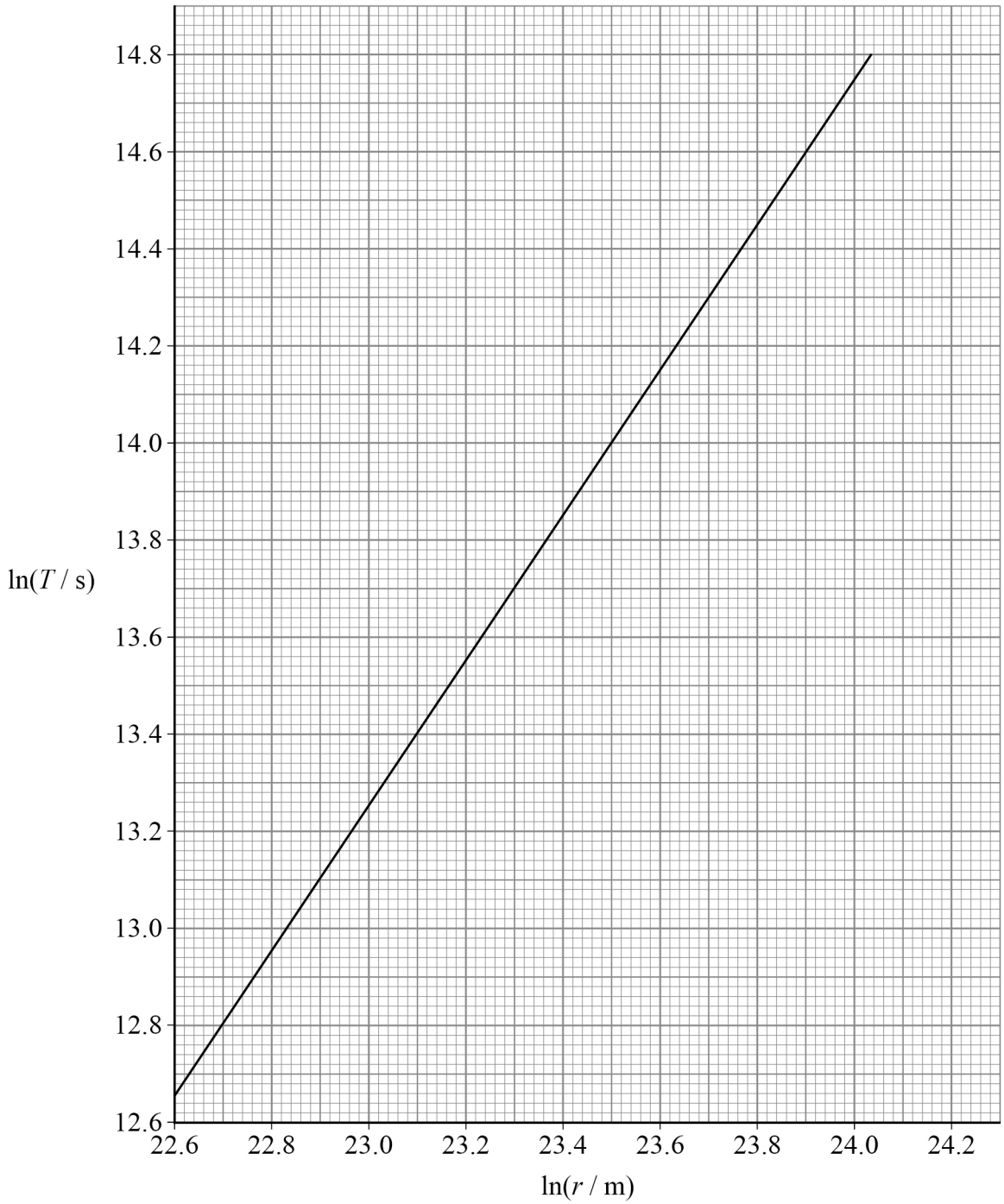

Theory suggests that the relationship between T and r is:

$$T^2 = \frac{4\pi^2 r^3}{GM}$$

where M is the mass of the star HD 108236.

Do not write outside the box

0 5 . 1 Show that the intercept c on a graph of $\ln(T / \mathrm{s})$ against $\ln(r / \mathrm{m})$ is given by:

$$c = \frac{1}{2}\ln\left(\frac{4\pi^2}{GM}\right)$$

[2 marks]

0 5 . 2 Explain, without calculation, how the gradient of the graph in **Figure 5** can be used to show that the astronomers' data are consistent with the relationship on page 12.

[1 mark]

_____

_____

_____

0 5 . 3 Determine M.

[3 marks]

$M =$ _____ kg

END OF SECTION A

6

Do not write outside the box

Section B

Answer **all** questions in this section.

0 6 **Figure 6** shows the apparatus used by Joule to measure the effect of doing work and to determine the specific heat capacity of water.

Figure 6

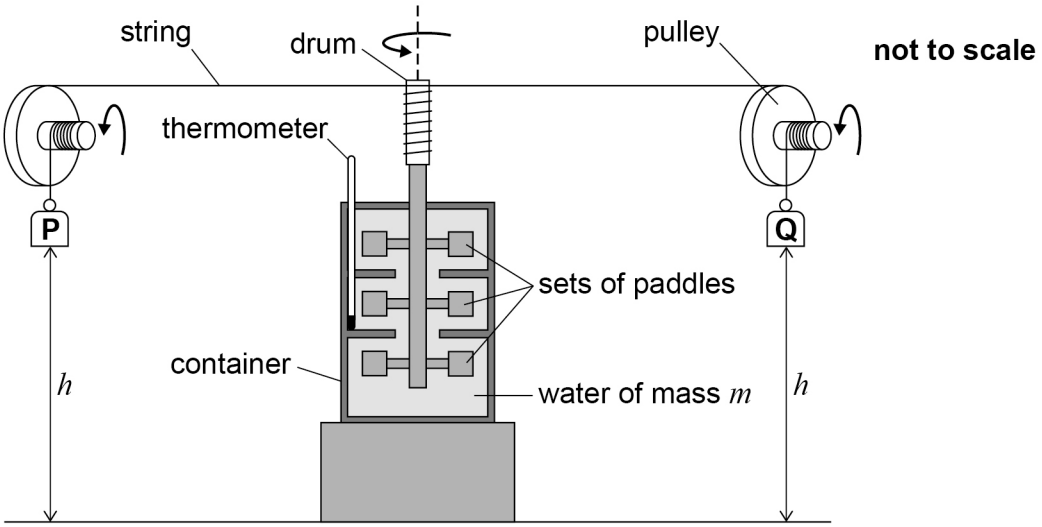

P and **Q** are masses each of mass M. They fall from rest from an initial height h above the ground. They are connected to a pulley system that turns sets of paddles. The paddles do work by stirring the water in the container.

The gravitational potential energies of **P** and **Q** are transferred to the water. The temperature of the water increases as a result of the work done as **P** and **Q** fall.

When **P** and **Q** reach the ground, the apparatus is reset as in **Figure 6** without causing the paddles to turn. **P** and **Q** are allowed to fall a total of 20 times.

The data collected are:

$h = 1.5963$ m
$M = 13.158$ kg
$m = 6.2512$ kg
$\Delta\theta = 0.364$ K

where $\Delta\theta$ is the total increase in temperature of the water and m is the mass of the water.

Do not write outside the box

0 6 . 1 The initial temperature of the water in the container is lower than the temperature of the surroundings.

Explain, with reference to the first law of thermodynamics, why the temperature of the water increases during this experiment.

[3 marks]

0 6 . 2 Show that the total energy transferred by **P** and **Q** as they fall is approximately 8240 J.

[2 marks]

0 6 . 3 State and explain the appropriate number of significant figures that should be given in the answer to Question **06.2**.

[1 mark]

Question 6 continues on the next page

Do not write outside the box

After each release, **P** and **Q** accelerate briefly before falling at a constant speed of $6.15\ \text{cm s}^{-1}$ until they hit the ground.

0 6 . 4 Explain, in terms of the forces acting on the paddles, why **P** and **Q** accelerate briefly before falling at constant speed.

[2 marks]

0 6 . 5 Calculate the total kinetic energy of **P** and **Q** before they hit the ground.

[1 mark]

total kinetic energy = _____ J

0 6 . 6 Explain whether the work done on the water by **P** and **Q** is significantly affected by the total kinetic energy of **P** and **Q**.

[2 marks]

Do not write outside the box

0 6 . 7 The total energy transferred by **P** and **Q** as they fall is approximately 8240 J.

$\Delta\theta = 0.364$ K
$m = 6.2512$ kg

Joule estimated that:

- 360 J was used to increase the temperature of the container and the paddles
- 0.060 K of the total increase in temperature of the water was caused by thermal conduction from the surroundings.

Calculate a value for the specific heat capacity of water.

[3 marks]

specific heat capacity = _____ J kg^{-1} K^{-1}

Question 6 continues on the next page

Do not write outside the box

Figure 7 shows the diameters of the pulleys and the drum. The pulleys are frictionless. The container and the water have been omitted from **Figure 7**.

P and **Q** each has a mass M of $13.158\ \text{kg}$ and produce tensions in their strings of T_P and T_Q respectively.

Figure 7

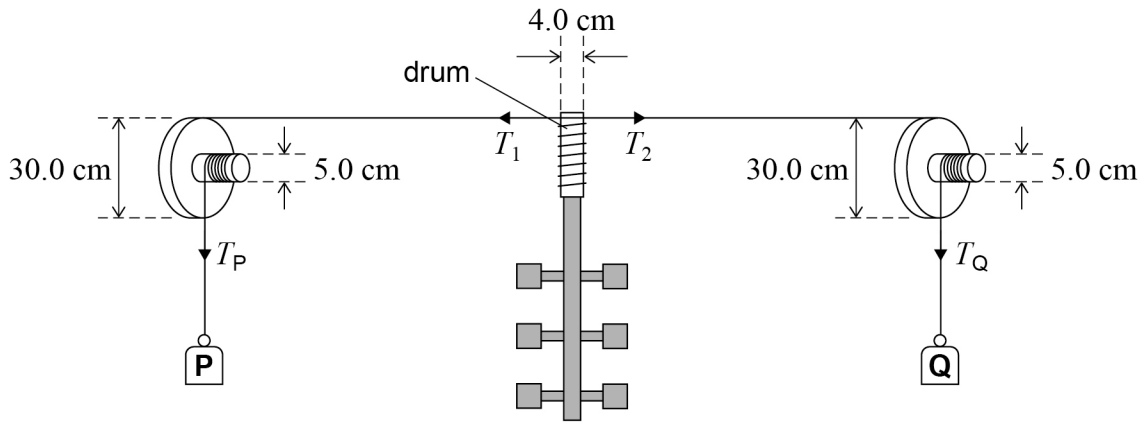

Figure 8 shows the strings and the drum viewed from above. These strings have tensions of T_1 and T_2 that together exert a couple on the drum.

Figure 8

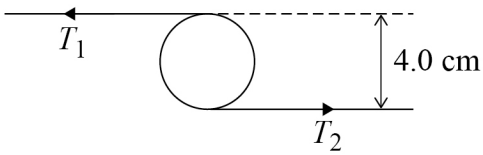

0 6 . 8 **P** and **Q** fall at a constant speed.

Show that the torque applied to the drum by the couple is approximately $0.9\ \text{N m}$.

[3 marks]

Do not write outside the box

0 6 . 9 **P** and **Q** fall through height h a total of 20 times in 519 s.
The total work done on the drum by T_1 and T_2 during this time is 8240 J.

Calculate the angular velocity of the drum.

[2 marks]

angular velocity = _____ rad s^{-1}

19

Turn over for the next question

Do not write outside the box

0 7 **Figure 9** shows a capacitor **C** with wires attached to its two circular conducting plates **P** and **Q**. The plates are separated by an air gap of width d.

Figure 9

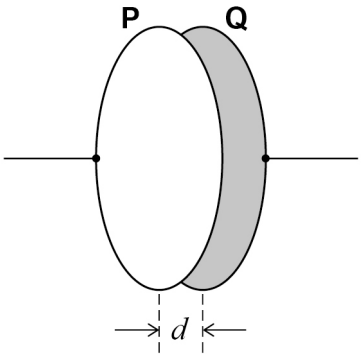

P and **Q** each has a radius of $1.3\ \text{cm}$. The capacitance of **C** is $52\ \text{pF}$.

0 7 . 1 Show that d is approximately $9.0 \times 10^{-5}\ \text{m}$.

[2 marks]

Do not write outside the box

Figure 10 shows **C** connected in a circuit with a resistor **R**, a switch **S** and a battery. The battery has an emf of 100 V and negligible internal resistance.

R has a resistance of 820 GΩ.

Figure 10

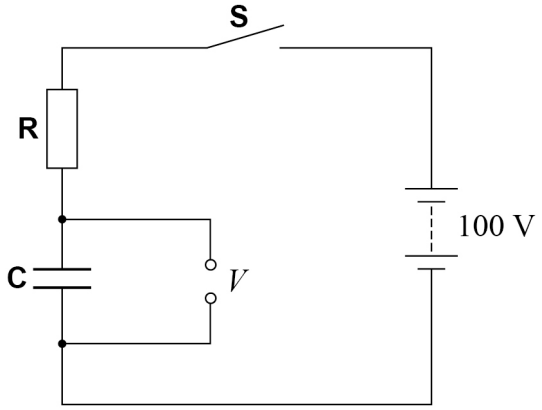

0 7 . 2 **C** is initially uncharged.
S is then closed.

After a time t, the voltage V across **C** is 99.2 V.

Calculate t.

[2 marks]

$t =$ _____ s

Question 7 continues on the next page

Do not write outside the box

S remains closed and **C** becomes fully charged.

C is now used as a microphone.

A sound wave of frequency $100\ \mathrm{Hz}$ arrives at plate **P**. This causes **P** to oscillate while **Q** does not move.
P oscillates with simple harmonic motion at a frequency of $100\ \mathrm{Hz}$ and with an amplitude of $4.5 \times 10^{-6}\ \mathrm{m}$.
The width of the air gap repeatedly increases and decreases.

0 7 . 3 Explain why the charge on **C** stays approximately constant as **P** oscillates.

[2 marks]

0 7 . 4 The width of the air gap decreases by $4.5 \times 10^{-6}\ \mathrm{m}$ compared with its value in Question **07.1**.

Deduce the effect of this change on V.

[3 marks]

Do not write outside the box

0 7 . 5 The sound wave arrives at **P** at time $t = 0$
At $t = 0$, $V = 100\ \text{V}$ and **P** begins to move towards **Q**.

Draw, on **Figure 11**, a graph to show the variation of V with t for **one** oscillation of **P**.
Add axes and scales to your graph.

[3 marks]

Figure 11

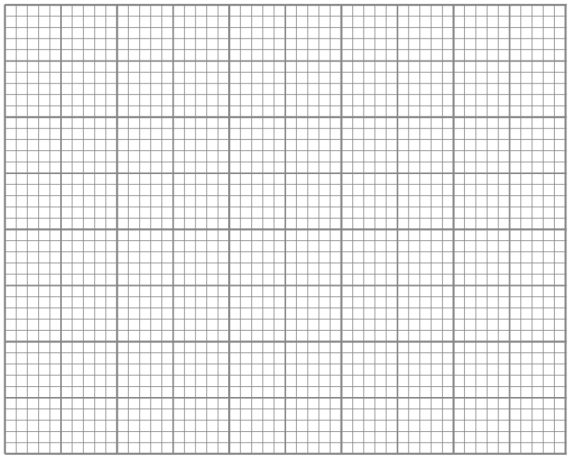

12

Turn over for the next question

Do not write outside the box

0 8 **Figure 12** shows how the intensity of the radiation observed on Earth from a star varies with the frequency f of the radiation.

Figure 12

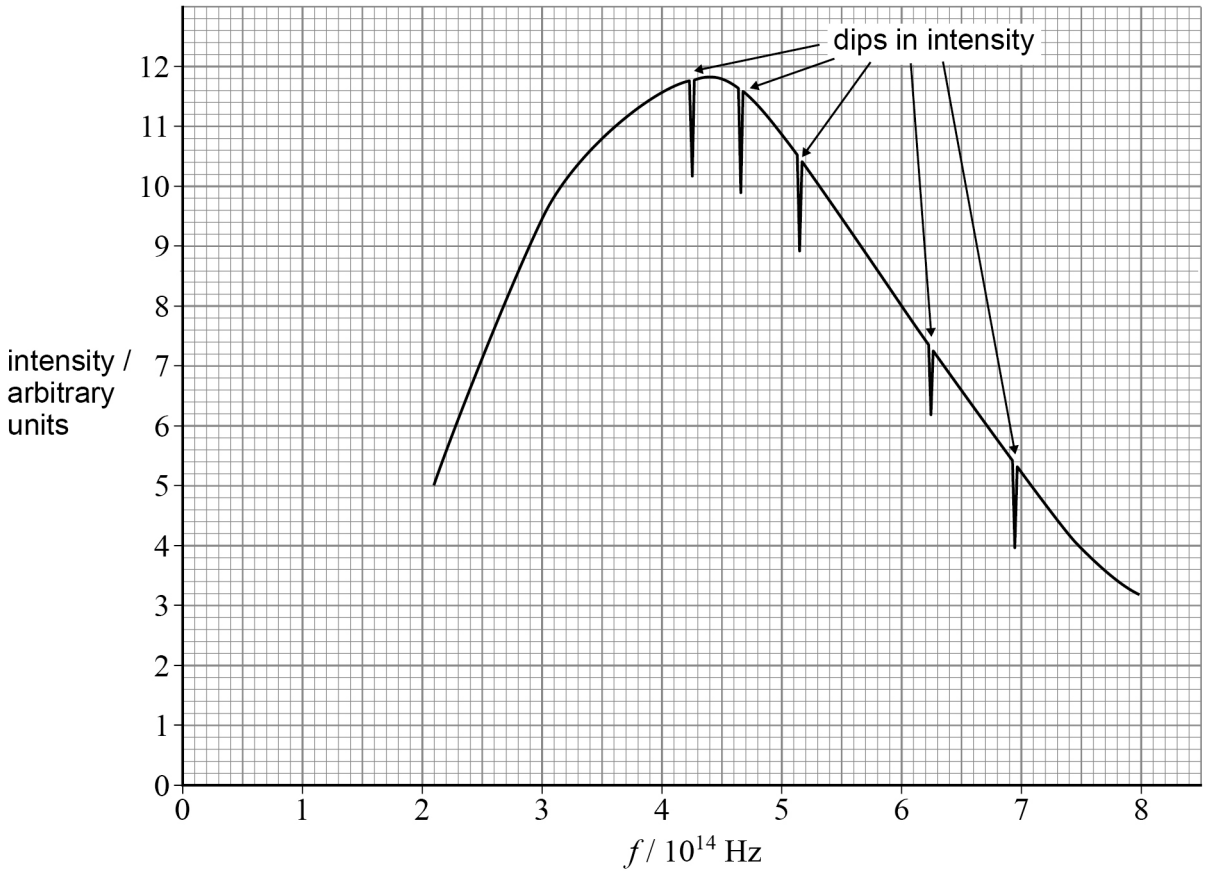

λ_{peak} is the wavelength, in m, of the peak intensity of the radiation emitted from the surface of a star.
λ_{peak} is related to the surface temperature T, in K, of the star by:

$$\lambda_{peak} = \frac{2.90 \times 10^{-3}}{T}$$

0 8 . 1 Calculate T.

[2 marks]

T = _____ K

Do not write outside the box

Question 8 continues on the next page

DO NOT WRITE ON THIS PAGE
ANSWER IN THE SPACES PROVIDED

Do not write outside the box

0 8 . 2 White light is emitted from the interior of the star. Atoms in the star's outer layers absorb photons of certain frequencies. This causes the dips in intensity in **Figure 12**. The atoms in the outer layers are excited when they absorb the photons.

Explain why the photon frequencies at which the dips occur depend on the particular elements present in the outer layers of the star.

[2 marks]

Antares is a star system that is 550 light years from the Earth. A light year is the distance travelled by light in one year.
Antares emits 7.59×10^4 times as much energy per second as the Sun.

0 8 . 3 Show that one light year is approximately equivalent to 9.5×10^{15} m.

[1 mark]

0 8 . 4 I_A is the intensity of light from Antares at the position of the Earth.
I_S is the intensity of light from the Sun at the position of the Earth.

Calculate $\frac{I_A}{I_S}$

radius of the Earth's orbit around the Sun = 1.5×10^{11} m

[3 marks]

$\frac{I_A}{I_S}$ = _____

Do not write outside the box

Figure 13 shows a binary system that consists of two stars Antares **A** and Antares **B**.
The stars have circular orbits around their common centre of mass **C**.
The gravitational forces F between the two stars and their distances from **C** are shown.

Figure 13

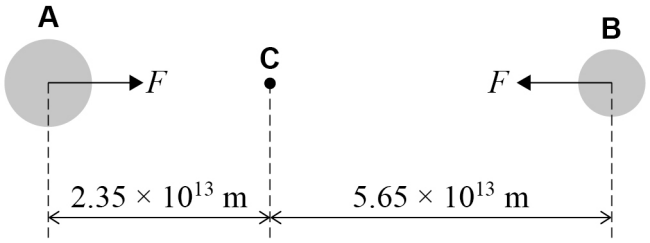

mass of **A** = 2.39×10^{31} kg
mass of **B** = 9.95×10^{30} kg

0 8 . 5 Calculate the time taken for Antares **A** to complete one orbit around **C**.

[4 marks]

time = _____ s

0 8 . 6 Explain why Antares **A** and Antares **B** must have the same orbital periods around **C**.

[1 mark]

_____

_____

_____

13

END OF QUESTIONS

Do not write outside the box

There are no questions printed on this page

DO NOT WRITE ON THIS PAGE
ANSWER IN THE SPACES PROVIDED

Do not write outside the box

Question number	**Additional page, if required.** **Write the question numbers in the left-hand margin.**

Do not write outside the box

Question number	**Additional page, if required.** **Write the question numbers in the left-hand margin.**

Do not write outside the box

Question number	**Additional page, if required.** **Write the question numbers in the left-hand margin.**

Do not write outside the box

There are no questions printed on this page

DO NOT WRITE ON THIS PAGE
ANSWER IN THE SPACES PROVIDED

Copyright information

For confidentiality purposes, all acknowledgements of third-party copyright material are published in a separate booklet. This booklet is published after each live examination series and is available for free download from www.oxfordaqa.com

Permission to reproduce all copyright material has been applied for. In some cases, efforts to contact copyright-holders may have been unsuccessful and OxfordAQA will be happy to rectify any omissions of acknowledgements. If you have any queries please contact the Copyright Team.

Copyright © 2024 OxfordAQA International Examinations and its licensors. All rights reserved.