OXFORD
INTERNATIONAL
AQA EXAMINATIONS

Please write clearly in block capitals.

Centre number | | | | | | Candidate number | | | | |

Surname _____

Forename(s) _____

Candidate signature _____
I declare this is my own work.

INTERNATIONAL A-LEVEL
PHYSICS

Unit 3 Fields and their consequences

Wednesday 11 January 2023 07:00 GMT Time allowed: 2 hours

Materials
For this paper you must have:
- a Data and Formulae Booklet as a loose insert
- a ruler with millimetre measurements
- a scientific calculator, which you are expected to use where appropriate
- a protractor.

Instructions
- Use black ink or black ball-point pen.
- Fill in the boxes at the top of this page.
- Answer **all** questions.
- You must answer the questions in the spaces provided. Do not write outside the box around each page or on blank pages.
- All working must be shown.
- If you need extra space for your answer(s), use the lined pages at the end of this book. Write the question number against your answer(s).
- Do all rough work in this book. Cross through any work you do not want to be marked.

Information
- The marks for questions are shown in brackets.
- The maximum mark for this paper is 80.

For Examiner's Use	
Question	Mark
1	
2	
3	
4	
5	
6	
7	
8–22	
TOTAL	

Do not write outside the box

Section A

Answer **all** questions in this section.

0 1 **Figure 1** shows a student moving a bucket of water in a vertical circle at a constant speed. The centre of the circle is marked with an **X**. The bucket is attached to a length of string.

Figure 1

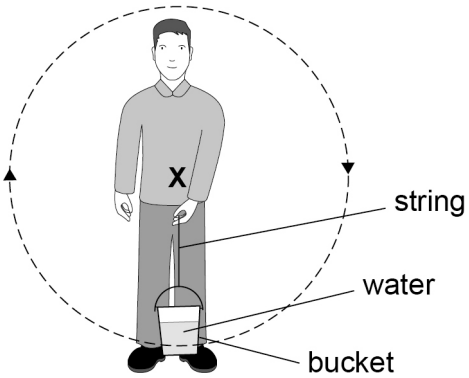

0 1 . 1 The water moves in a circle whose centre is at **X**.

Draw, on **Figure 1**, an arrow to show the direction of the resultant force acting on the water.

[1 mark]

0 1 . 2 At the top of the circle, the angular speed is just sufficient to keep the water in the bucket.

Explain why the centripetal force on the water is equal to its weight at the top of the circle.

[1 mark]

_____

_____

_____

_____

Do not write outside the box

0 1 . 3 The radius of the circle is $0.85\ \mathrm{m}$.

Calculate the angular speed of the water.

[3 marks]

angular speed = _____ $\mathrm{rad\ s^{-1}}$

0 1 . 4 The student gradually increases the angular speed until the string breaks.

The student plans to repeat the procedure. He wants to achieve a greater angular speed without breaking the string.

He plans to use:

- a new piece of the same type of string
- the same bucket.

Discuss **two** changes the student can make to move water in a vertical circle at a greater angular speed without the string breaking.

[4 marks]

1 _____

_____

_____

_____

_____

2 _____

_____

_____

_____

_____

9

Turn over ►

Do not write outside the box

There are no questions printed on this page

DO NOT WRITE ON THIS PAGE
ANSWER IN THE SPACES PROVIDED

Do not write outside the box

0 2 **Figure 2** shows a tuning fork with a small piece of clay attached to it.

Figure 2

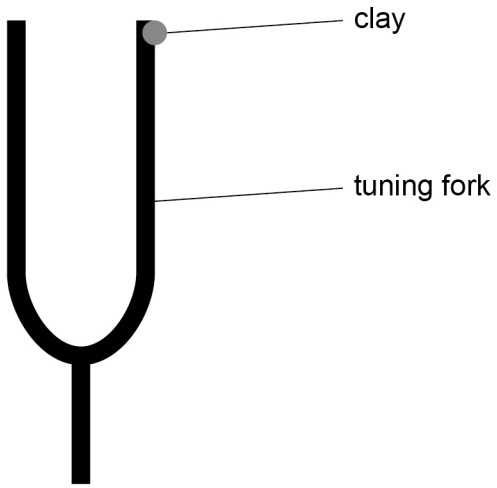

The tuning fork is made to vibrate. The clay stays attached to the tuning fork. **Figure 3** shows the tuning fork and clay vibrating.

Figure 3

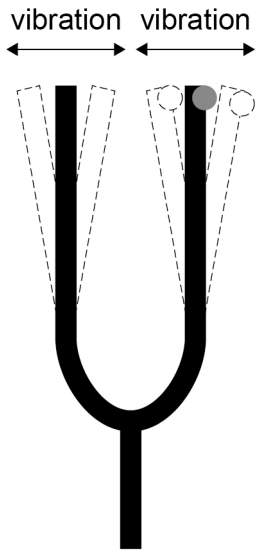

Question 2 continues on the next page

Do not write outside the box

Figure 4 shows the variation of acceleration of the clay with displacement from its equilibrium position.

Figure 4

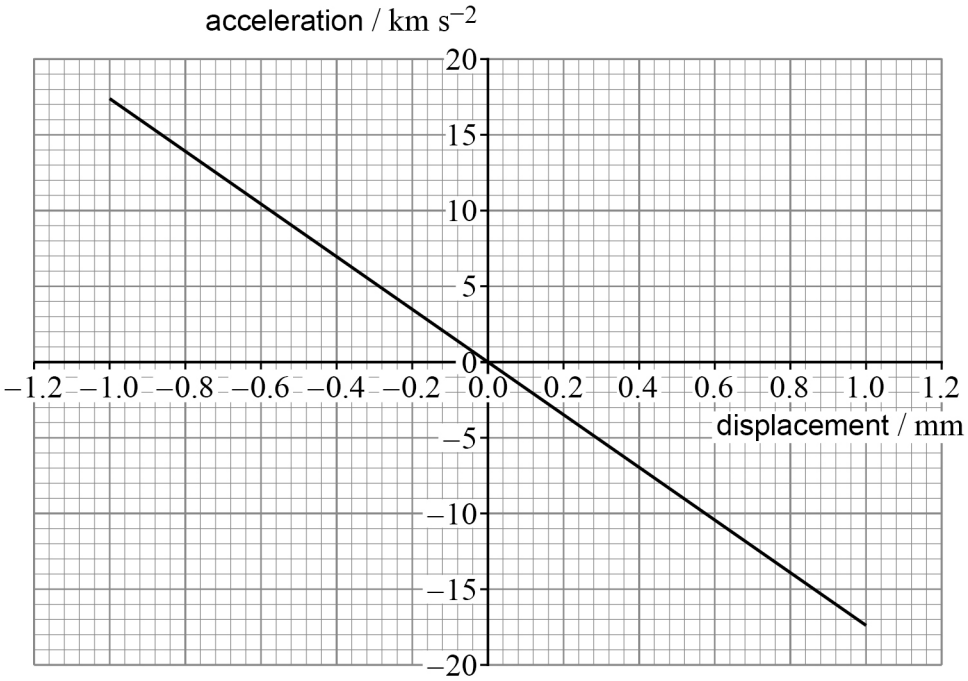

0 2 . 1 Explain how **Figure 4** shows that the motion of the clay is consistent with the conditions for simple harmonic motion.

[2 marks]

Do not write outside the box

0 2 . 2 Show that the frequency of the vibration of the clay is approximately 700 Hz.

[3 marks]

0 2 . 3 Calculate, in $m\ s^{-1}$, the maximum speed of the clay.

[2 marks]

maximum speed = _____ $m\ s^{-1}$

0 2 . 4 Label, with a **P** on **Figure 4**, the position of a point at which the clay is travelling at its maximum speed.

[1 mark]

8

Turn over ►

Do not write outside the box

There are no questions printed on this page

DO NOT WRITE ON THIS PAGE
ANSWER IN THE SPACES PROVIDED

Do not write outside the box

0 3 Electrostatic precipitators are used to remove smoke particles from the gases released by coal-fired power stations.

Figure 5 shows a simplified electrostatic precipitator.
A metal rod of radius a is placed along the vertical axis of a hollow metal cylinder of radius b.
Point **X** is halfway between the rod and the cylinder wall.

The rod and cylinder are connected to a high-voltage supply to create an electric field inside the cylinder. The electric field strength E is horizontal inside the cylinder.

Figure 5

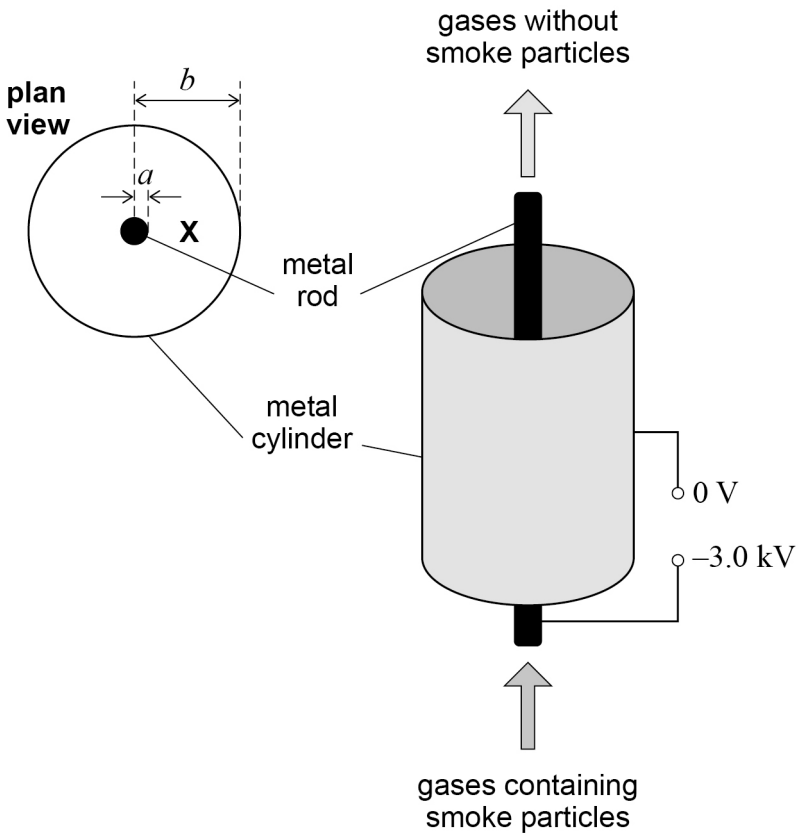

Gases containing smoke particles enter at the bottom of the cylinder. The smoke particles become charged and are attracted to the cylinder wall.
The smoke particles stick to the inside of the wall. The gases leave the top of the cylinder without the smoke particles.

Question 3 continues on the next page

Do not write outside the box

Figure 6 shows the variation of the magnitude of E with radial distance r from the surface of the rod to the cylinder wall.

Figure 6

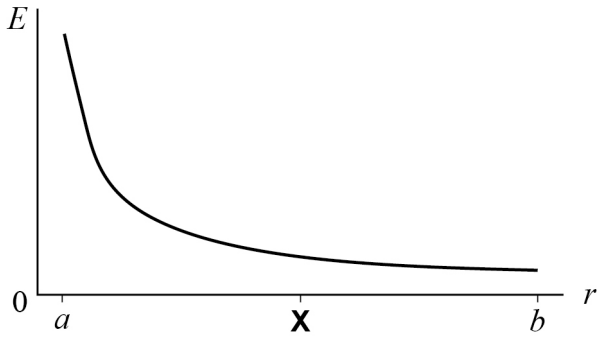

The rod is at an electric potential of $-3.0\ \mathrm{kV}$ and the cylinder is at $0\ \mathrm{V}$.

0 3 . 1 A student suggests that the potential at **X** is $-1.5\ \mathrm{kV}$.

Discuss this suggestion.

[2 marks]

Do not write outside the box

A smoke particle enters the cylinder near the rod. Initially it is uncharged and travels vertically with a velocity of $5.2\ \mathrm{m\ s^{-1}}$.
Figure 7 shows the path of the smoke particle inside the cylinder.

Figure 7

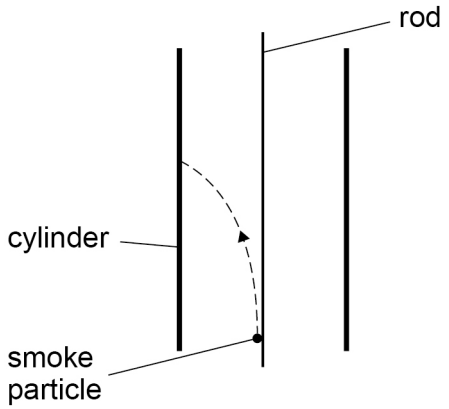

The mass of the particle is $2.7 \times 10^{-17}\ \mathrm{kg}$.
The particle acquires a charge of $-3.2 \times 10^{-19}\ \mathrm{C}$ near the rod.
The particle experiences an initial horizontal acceleration of $91\ \mathrm{m\ s^{-2}}$ due to the electric field in the cylinder.

0 3 . 2 Determine the magnitude of E at the point where the particle acquires the charge.
[3 marks]

$E =$ _____ $\mathrm{N\ C^{-1}}$

Question 3 continues on the next page

Do not write outside the box

The vertical component of the velocity of the particle remains constant at $5.2\ \mathrm{m\ s^{-1}}$. Assume that all other forces on the particle are negligible except for the electrostatic force.

0 3 . 3 State and explain any change to the magnitude and to the direction of the acceleration of the particle as it moves along its path.
Refer to **Figure 6** in your answer.

[3 marks]

0 3 . 4 Calculate the speed of the particle as it reaches the cylinder wall.

[4 marks]

speed = _____ $\mathrm{m\ s^{-1}}$

12

Do not write outside the box

0 4 A student uses the circuit in **Figure 8** to determine the capacitance of a capacitor. The capacitor is initially uncharged.

The variable resistor **R** is set to its maximum value and the switch is closed. **R** is then used to keep the charging current constant while the capacitor charges.

Figure 8

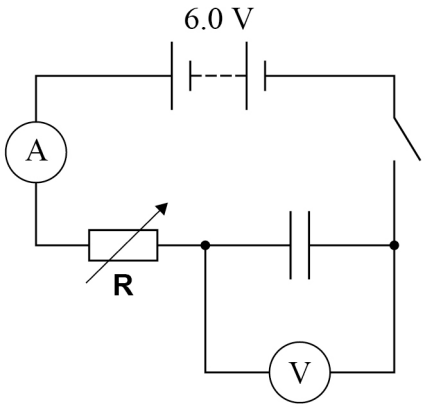

The charging current is $0.38\ \text{mA}$. During the experiment, the student gradually decreases the resistance of **R** to maintain a constant current of $0.38\ \text{mA}$.

The reading V on the voltmeter is recorded every ten seconds for $120\ \text{s}$. The time is measured using a stopwatch.

The battery has an emf of $6.0\ \text{V}$ and negligible internal resistance.

0 4 . 1 Calculate the maximum resistance of **R**.

[1 mark]

maximum resistance = _____ Ω

0 4 . 2 Explain why the resistance of **R** needs to be decreased to maintain a constant current.

[1 mark]

_____

_____

_____

Question 4 continues on the next page

Do not write outside the box

0 4 . 3 Show that the charge on the capacitor after 120 s is approximately 0.046 C.

[1 mark]

Figure 9 is a graph of the voltmeter readings V against time t.

Figure 9

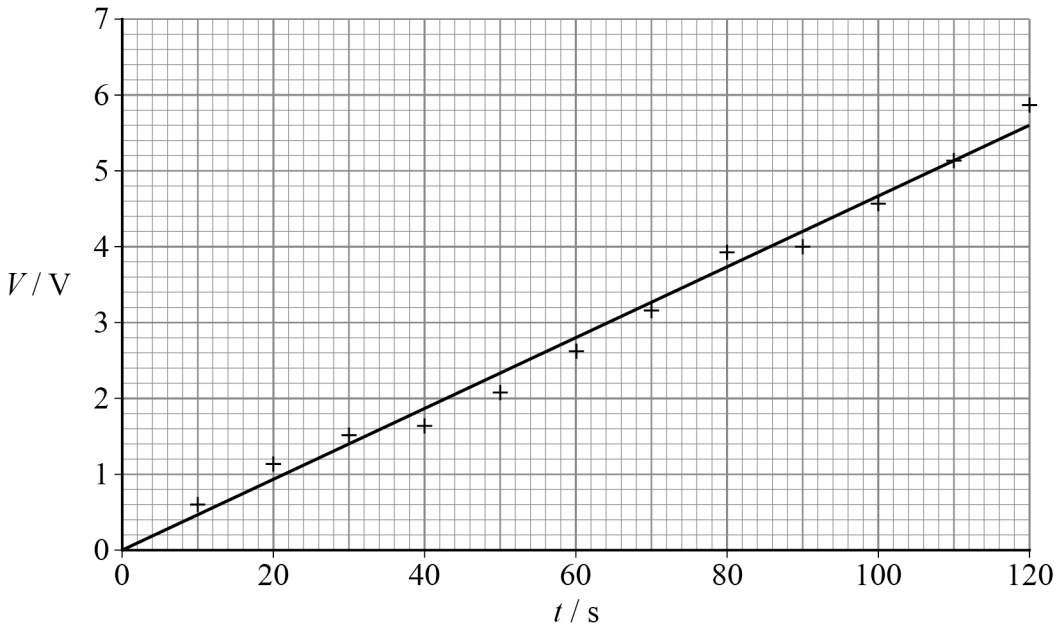

0 4 . 4 Determine the capacitance of the capacitor.

[2 marks]

capacitance = _____ F

Do not write outside the box

The student makes the new capacitor shown in **Figure 10**.
The two square metal plates have sides of length 15 cm. They overlap completely and are separated by a piece of dielectric material.
The dielectric material has a thickness of 3.5 mm and completely fills the space between the plates.

Figure 10

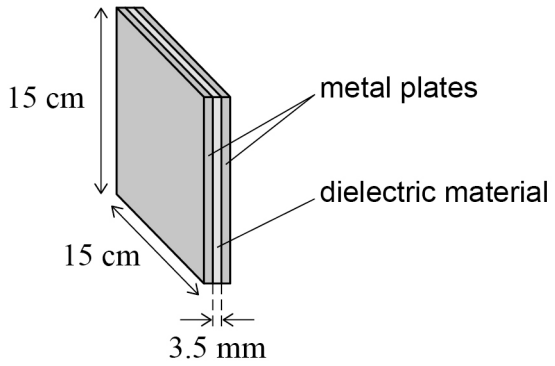

The capacitance of this capacitor is 0.13 nF.

0 4 . 5 Calculate the relative permittivity of the dielectric material.

[2 marks]

relative permittivity = _____

0 4 . 6 Discuss whether the student could use the experimental procedure described on **page 13** to confirm the capacitance of the 0.13 nF capacitor.

[3 marks]

_____

_____

_____

_____

_____

_____

_____

_____

10

Turn over ►

Do not write outside the box

0 5 FDG is a chemical used in medicine. FDG contains the nuclide fluorine-18 $\left({}^{18}_{9}\mathrm{F}\right)$.

Fluorine-18 has a half-life of 6.59×10^{3} s.

0 5 . 1 State what is meant by the half-life of fluorine-18.

[1 mark]

_____

_____

_____

0 5 . 2 Show that the decay constant of fluorine-18 is approximately $1.1 \times 10^{-4}\ \mathrm{s}^{-1}$.

[1 mark]

A sample of FDG with an activity of 370 MBq is injected into a patient.
Assume that the activity of the sample is due only to fluorine-18.

0 5 . 3 Calculate, in kg, the mass of fluorine-18 in the FDG sample.

mass of 1.0 mol of fluorine-18 = 1.8×10^{-2} kg

[3 marks]

mass = _____ kg

Do not write outside the box

0 5 . 4 The sample of FDG was produced 12 hours before it was used in the injection.

Calculate the activity of the fluorine-18 in the sample of FDG when it was produced.

[2 marks]

activity = _____ Bq

7

Turn over for the next question

Do not write outside the box

0 6 The solar wind is a stream of highly energetic particles, such as protons, that flow out from the Sun.

0 6 . 1 State the condition in which a charged particle moves in a magnetic field and experiences no force.

[1 mark]

_____

_____

Figure 11 shows the path a proton takes as it travels in the Earth's magnetic field. The proton moves in a helix around the magnetic field line.
The radius r of the path is shown in **Figure 11**. The proton moves with constant speed.

Figure 11

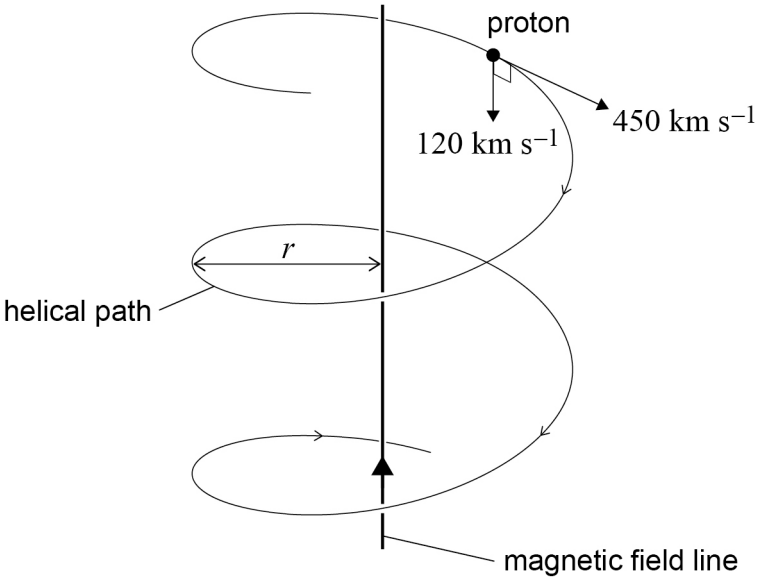

The magnetic flux density in this region is 1.2×10^{-7} T.

The velocity of the proton has two components of constant magnitude:

- component perpendicular to the magnetic field = 450 km s^{-1}
- component parallel to the magnetic field = 120 km s^{-1}.

Do not write outside the box

0 6 . 2 The radius r is constant.

Calculate r.

[3 marks]

r = _____ m

0 6 . 3 Explain why the proton takes the path shown in **Figure 11**.

[2 marks]

_____

_____

_____

_____

_____

_____

Question 6 continues on the next page

Do not write outside the box

0 6 . 4 The interaction between the solar wind and the Earth's magnetic field can cause a small change in the magnetic flux density near the Earth's surface.

Explain how this small change can cause the induction of very large voltages in power transmission lines.

Refer to Faraday's law in your answer.

[3 marks]

9

Do not write outside the box

0 7 Comets are balls of rock and ice.
Figure 12 shows a comet in an elliptical orbit around the Sun. The comet is closest to the Sun at point **P**.

Figure 12

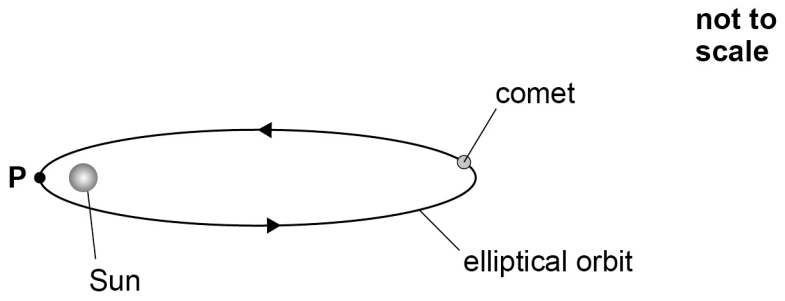

Table 1 shows data for the comet at **P**.

Table 1

distance to Sun	8.758×10^{10} m
speed	5.457×10^{4} m s^{-1}
mass of comet	2.242×10^{14} kg

0 7 . 1 Show that the gravitational force of the Sun on the comet at **P** is approximately 3.9×10^{12} N.

[1 mark]

Question 7 continues on the next page

Do not write outside the box

0 7 . 2 Explain how the gravitational force in Question **07.1** and the data in **Table 1** show that the comet is **not** in a circular orbit around the Sun.

[2 marks]

_____

_____

_____

0 7 . 3 The orbital period T of an object orbiting the Sun at a mean orbital radius R is approximately given by:

$$T^2 = kR^3$$

where k is a constant.

The mean orbital radius of the comet is $18R_E$ where R_E is the mean orbital radius of the Earth.

Estimate, in years, the orbital period T of the comet.

[3 marks]

$T =$ _____ years

Do not write outside the box

0 7 . 4 The total energy of the comet is the sum of its kinetic energy and its gravitational potential energy.

Show that the total energy of the comet at **P** is approximately -6×10^{21} J.

[2 marks]

0 7 . 5 Calculations for a different comet show that it has a total energy of $+6 \times 10^{21}$ J at its closest point to the Sun.

A student suggests that this comet will **not** remain in orbit around the Sun.

Discuss whether this suggestion is correct.

[2 marks]

10

END OF SECTION A

Do not write outside the box

Section B

Each of the questions in this section is followed by four responses, **A**, **B**, **C** and **D**.

For each question select the best response.

Only **one** answer per question is allowed.
For each question, completely fill in the circle alongside the appropriate answer.

CORRECT METHOD ⬬ WRONG METHODS

If you want to change your answer you must cross out your original answer as shown.

If you wish to return to an answer previously crossed out, ring the answer you now wish to select as shown.

You may do your working in the blank space around each question but this will not be marked. Do **not** use additional sheets for this working.

0 8 A particle undergoes SHM with a period of $4.6\ \mathrm{s}$.
The particle has a speed of $1.25\ \mathrm{m\ s^{-1}}$ when its displacement from the centre is $0.60\ \mathrm{m}$.

What is the amplitude of the particle's oscillation?

[1 mark]

A $0.72\ \mathrm{m}$

B $0.84\ \mathrm{m}$

C $1.09\ \mathrm{m}$

D $1.20\ \mathrm{m}$

Do not write outside the box

0 9 A particle experiences SHM.
Its potential energy is E when at its maximum displacement.

Which row identifies the total energy and kinetic energy of the particle when its velocity is a maximum?

[1 mark]

	Total energy	Kinetic energy
A	E	$\frac{E}{2}$
B	E	E
C	$2E$	E
D	$2E$	$2E$

1 0 The mass of the Earth is 81 times the mass of the Moon.
A spaceship travels from the Earth to the Moon. The gravitational potential is a maximum at a point **P**.

At **P**, what is $\frac{\text{distance from centre of Earth}}{\text{distance from centre of Moon}}$?

[1 mark]

A 0.1

B 1

C 9

D 81

Turn over ►

Do not write outside the box

1 1 The gravitational field strength on the surface of a planet is g.
The diameter of the planet is d.

What is the mean density of the planet?

[1 mark]

A $\frac{g}{4\pi dG}$

B $\frac{g}{2\pi dG}$

C $\frac{3g}{4\pi dG}$

D $\frac{3g}{2\pi dG}$

1 2 Five charged objects are at points **P**, **Q**, **R**, **S** and **T**.
The objects are arranged so that the electric field strength at **X** is zero.
The object at **S** carries a positive charge.

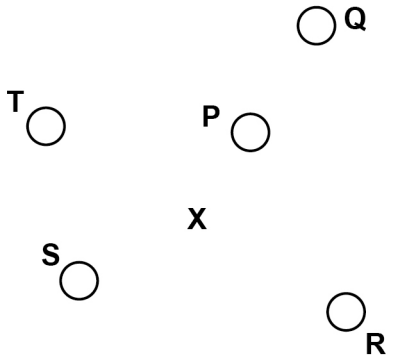

The object at **S** is removed without affecting the other objects' positions or charge.

What is the direction of the resultant electric field strength at **X** due to the remaining four charged objects?

[1 mark]

A from **P** to **X**

B from **S** to **X**

C from **X** to **P**

D from **X** to **S**

Do not write outside the box

1 3 A parallel-plate capacitor is connected across a battery.
A piece of dielectric material is inserted into the space between the plates with the battery still connected.

What happens to the charge stored on the capacitor and the potential difference across the capacitor?

[1 mark]

	Charge stored on the capacitor	**Potential difference across the capacitor**	
A	increases	stays the same	⬭
B	increases	increases	⬭
C	stays the same	stays the same	⬭
D	stays the same	decreases	⬭

Turn over for the next question

Do not write outside the box

1 4 An uncharged capacitor **P** is charged through a resistor **R**.
Quantities **X** and **Y** are measured as the capacitor is charged.
The following graphs are produced.

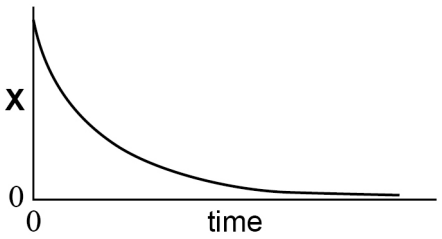

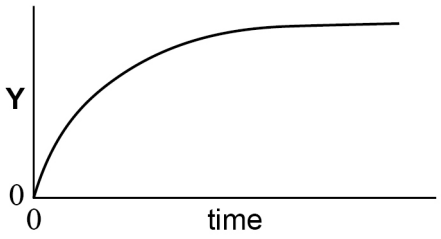

What are **X** and **Y**?

[1 mark]

	X	Y	
A	potential difference across **R**	current in **R**	⬭
B	potential difference across **P**	charge on **P**	⬭
C	potential difference across **P**	current in **R**	⬭
D	current in **R**	potential difference across **P**	⬭

Do not write outside the box

The data below relate to Question **15** and Question **16**.

A 2.2 mF capacitor is charged to a potential difference of 12 V.
It is then discharged through a 10 kΩ resistor until the potential difference across the capacitor decreases to 6.0 V.

1 5 What is the time taken from the start of the discharge for the potential difference across the capacitor to decrease to 6.0 V?

[1 mark]

A 11 s ⬭

B 15 s ⬭

C 22 s ⬭

D 32 s ⬭

1 6 How much energy is dissipated in the resistor while the capacitor is discharging from 12 V to 6.0 V?

[1 mark]

A 40 mJ ⬭

B 80 mJ ⬭

C 120 mJ ⬭

D 160 mJ ⬭

Turn over for the next question

Do not write outside the box

1 7 Two magnets are used to create a uniform horizontal magnetic field of flux density 0.15 T. The magnetic field does not extend outside the space between the magnets.

A wire is perpendicular to the magnetic field and carries a current of 1.2 A.

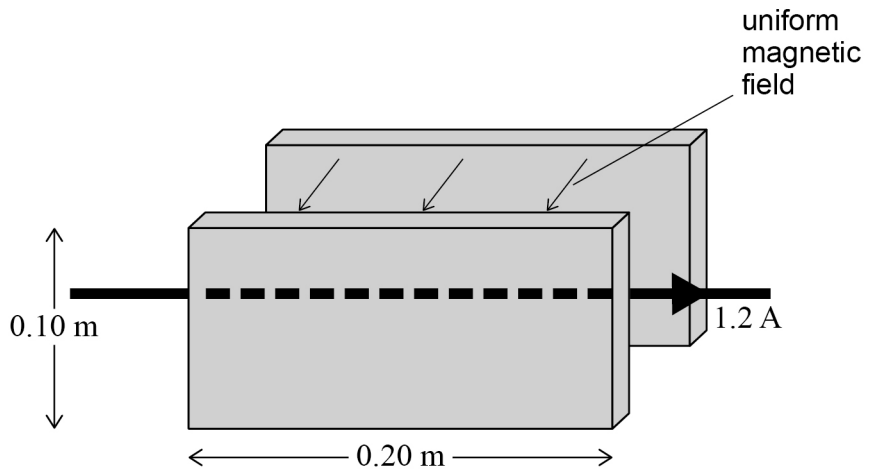

What are the magnitude and the direction of the force on the current-carrying wire due to the magnetic field between the magnets?

[1 mark]

	Magnitude	Direction	
A	0.036 N	down	⬭
B	0.018 N	down	⬭
C	0.036 N	up	⬭
D	0.018 N	up	⬭

Do not write outside the box

1 8 A rectangular coil has an area of $2.5 \times 10^{-3}\ \mathrm{m}^2$ and 60 turns. The coil is in a uniform magnetic field of magnetic flux density $0.34\ \mathrm{T}$.
Initially, the plane of the coil is parallel to the flux lines.

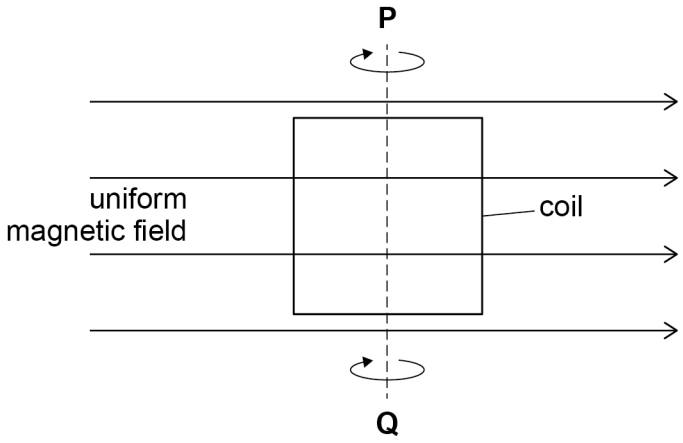

The coil is then rotated through an angle of $40°$ about axis **PQ**.

What is the change in flux linkage of the coil?

[1 mark]

A $0.012\ \mathrm{Wb}$ ⬭

B $0.018\ \mathrm{Wb}$ ⬭

C $0.033\ \mathrm{Wb}$ ⬭

D $0.039\ \mathrm{Wb}$ ⬭

1 9 The root mean square (rms) voltage across a resistor is $125\ \mathrm{V}$ and the peak current in the resistor is $1.7\ \mathrm{A}$.

What is the mean power dissipated in the resistor?

[1 mark]

A $106\ \mathrm{W}$ ⬭

B $150\ \mathrm{W}$ ⬭

C $213\ \mathrm{W}$ ⬭

D $301\ \mathrm{W}$ ⬭

Do not write outside the box

2 0 A transformer is used to produce a higher voltage from a 5.0 V rms supply. The transformer has a primary coil of 1000 turns and a secondary coil of 12 000 turns. All of the flux from the primary coil links with the secondary coil.

The rms current in the secondary coil is 0.15 A and the transformer is 90% efficient.

What is the rms current in the primary coil?

[1 mark]

A 1.6 A ⬭

B 1.8 A ⬭

C 2.0 A ⬭

D 2.3 A ⬭

2 1 An object with a mass of 0.15 kg is suspended from a spring.
The spring has a stiffness of 2.5 N m^{-1}.
The object is displaced vertically and released.
It undergoes SHM with a period T.

Which length of simple pendulum also has a period T?

[1 mark]

A 0.4 m ⬭

B 0.6 m ⬭

C 3.7 m ⬭

D 5.8 m ⬭

Do not write outside the box

2 2 An object is suspended from a spring of stiffness k.
The extension of the spring is ΔL.
The object is displaced vertically and released.
It oscillates with SHM of frequency f.

The procedure is repeated using the same object and a spring with stiffness $2k$. The values of ΔL and f are different for this new spring.

Which quantity doubles when the second spring of stiffness $2k$ is used?

[1 mark]

A $\left(\frac{1}{f\Delta L}\right)^2$ ⬭

B $\frac{1}{f\Delta L}$ ⬭

C $f\Delta L$ ⬭

D $(f\Delta L)^2$ ⬭

15

END OF QUESTIONS

Do not write outside the box

There are no questions printed on this page

DO NOT WRITE ON THIS PAGE
ANSWER IN THE SPACES PROVIDED

Do not write outside the box

Question number	**Additional page, if required.** **Write the question numbers in the left-hand margin.**

Do not write outside the box

Question number	**Additional page, if required.** **Write the question numbers in the left-hand margin.**

Copyright information

For confidentiality purposes, all acknowledgements of third-party copyright material are published in a separate booklet. This booklet is published after each live examination series and is available for free download from www.oxfordaqaexams.org.uk.

Permission to reproduce all copyright material has been applied for. In some cases, efforts to contact copyright-holders may have been unsuccessful and Oxford International AQA Examinations will be happy to rectify any omissions of acknowledgements. If you have any queries please contact the Copyright Team.

Copyright © 2023 Oxford International AQA Examinations and its licensors. All rights reserved.