OXFORD
INTERNATIONAL
AQA EXAMINATIONS

Please write clearly in block capitals.

Centre number | | | | | | Candidate number | | | | |

Surname _____

Forename(s) _____

Candidate signature _____
I declare this is my own work.

INTERNATIONAL A-LEVEL
PHYSICS

Unit 5 Physics in practice

Tuesday 25 January 2022 07:00 GMT Time allowed: 2 hours

Materials
For this paper you must have:
- a Data and Formulae Booklet as a loose insert
- a ruler with millimetre measurements
- a scientific calculator, which you are expected to use where appropriate
- a protractor.

Instructions
- Use black ink or black ball-point pen.
- Fill in the boxes at the top of this page.
- Answer **all** questions.
- You must answer the questions in the spaces provided. Do not write outside the box around each page or on blank pages.
- All working must be shown.
- If you need extra space for your answer(s), use the lined pages at the end of this book. Write the question number against your answer(s).
- Do all rough work in this book. Cross through any work you do not want to be marked.

Information
- The marks for questions are shown in brackets.
- The maximum mark for this paper is 80.

For Examiner's Use	
Question	Mark
1	
2	
3	
4	
5	
6	
7	
TOTAL	

Do not write outside the box

Section A

Answer **all** questions in this section.

0 1 A student takes measurements to determine the density of the rubber used to make a solid ball.

0 1 . 1 She measures the diameter d of the ball five times using a vernier caliper. **Table 1** shows her measurements.

Table 1

***d* / cm**	4.02	3.91	3.99	3.97	4.05

Figure 1 shows the ball and vernier caliper for **one** of the measurements shown in **Table 1**.

Figure 1

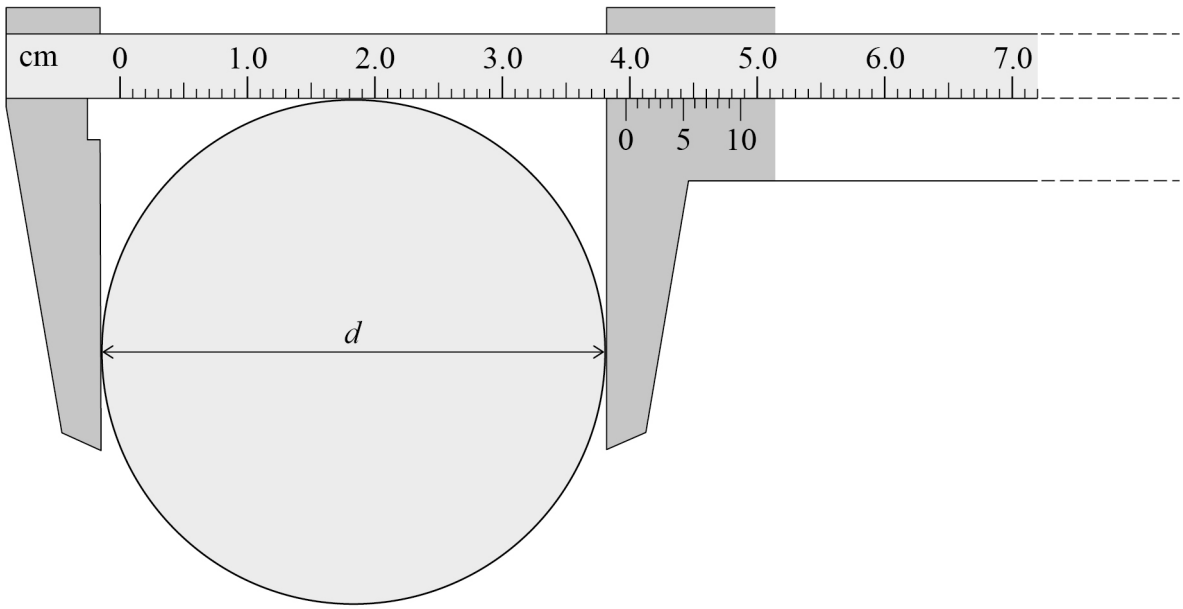

State the measurement of d that is shown in **Figure 1**.

[1 mark]

d = _____ cm

Do not write outside the box

0 1 . 2 Calculate the absolute uncertainty in the mean value of d.

[1 mark]

absolute uncertainty = _____ cm

0 1 . 3 Determine the percentage uncertainty in the mean value of d.

[2 marks]

percentage uncertainty = _____

The student measures the mass of the ball to be (48.7 ± 0.1) g.

0 1 . 4 Calculate, in kg m^{-3}, the density of the rubber used to make the solid ball.

[2 marks]

density = _____ kg m^{-3}

0 1 . 5 Calculate the absolute uncertainty in your value for Question **01.4**.

[2 marks]

absolute uncertainty = _____ kg m^{-3}

8

Do not write outside the box

There are no questions printed on this page

DO NOT WRITE ON THIS PAGE
ANSWER IN THE SPACES PROVIDED

Do not write outside the box

0 2 Gamma rays are passed through a lead absorber of thickness x. The gamma count rate is measured by a detector. **Figure 2** shows the apparatus used.

Figure 2

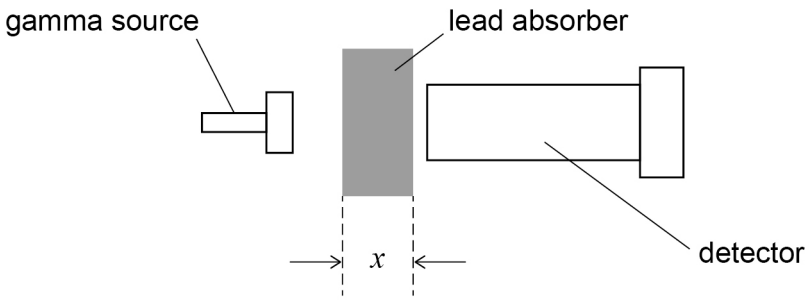

The corrected count rate C is determined for a range of values of x.

Table 2 shows the results together with some values of $\ln(C / \text{counts s}^{-1})$.

Table 2

x / cm	C / counts s^{-1}	$\ln(C$ / counts s$^{-1})$
0.50	2967	8.00
1.00	1873	7.54
1.50	1183	
2.00	746	
2.50	471	

0 2 . 1 Complete **Table 2**.

[1 mark]

Question 2 continues on the next page

Do not write outside the box

Theory predicts that the relationship between C and x is:

$$C = C_0 e^{-\mu \rho x}$$

where μ = a constant for lead
ρ = density of lead = $11.3\ \text{g cm}^{-3}$
C_0 = corrected count rate with no absorber present.

0 2 . 2 Plot, on **Figure 3**, a graph of $\ln(C\ /\ \text{counts s}^{-1})$ against x.

[2 marks]

Figure 3

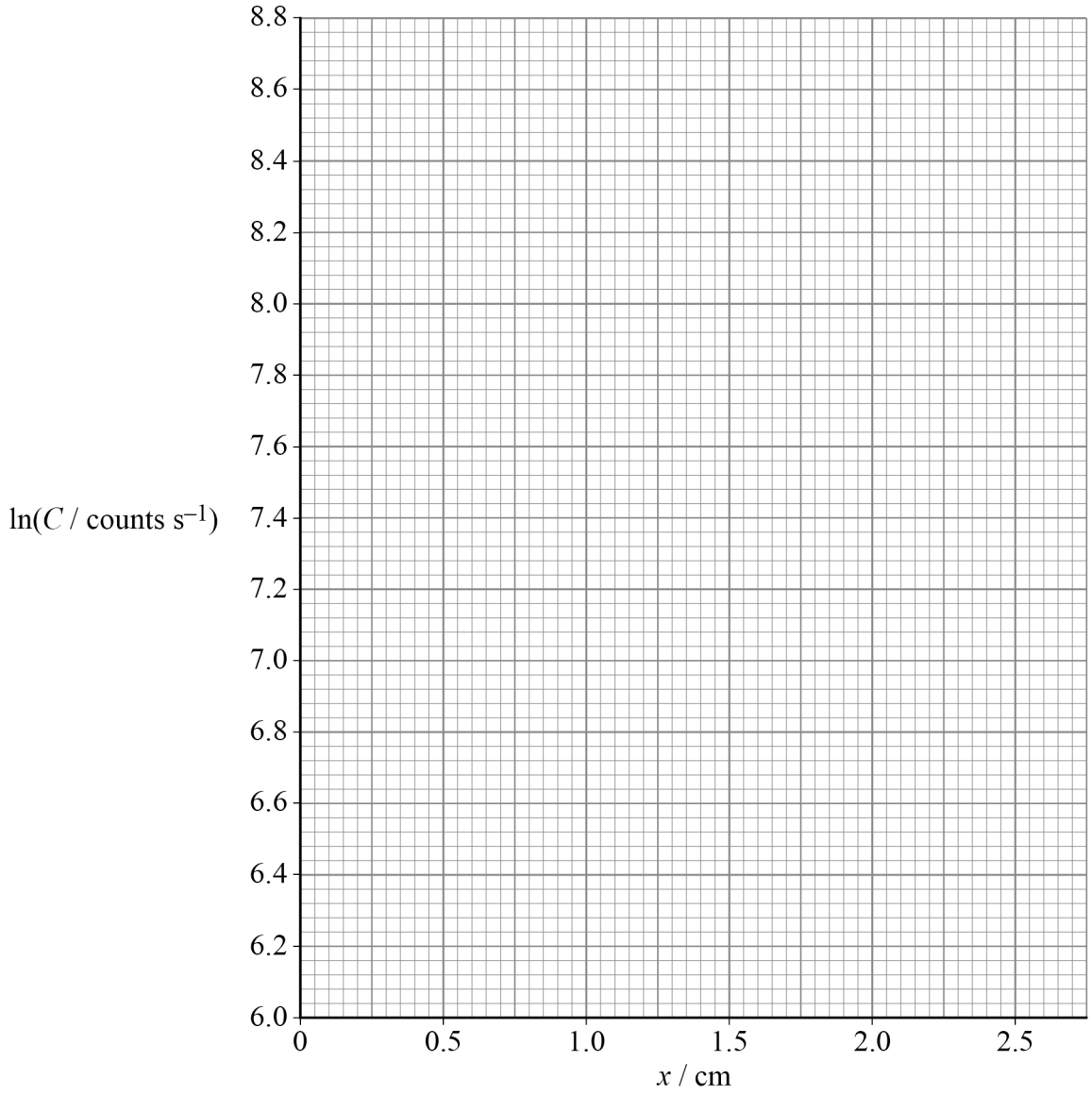

Do not write outside the box

0 2 . 3 Determine μ.
State an appropriate unit for your answer.

[3 marks]

$\mu =$ _____

unit = _____

0 2 . 4 Show that C_0 is approximately $5000 \text{ counts s}^{-1}$.

[2 marks]

0 2 . 5 Determine the thickness of lead that will reduce C to a value equal to $\frac{C_0}{2}$.

[2 marks]

thickness = _____ cm

0 2 . 6 Deduce the thickness of lead that will reduce C to a value equal to $\frac{C_0}{32}$.

[1 mark]

thickness = _____ cm

11

Do not write outside the box

0 3 A student wants to determine the input power and the output power of a transformer. The transformer has a variable resistor connected across the output.

0 3 . 1 Draw, on **Figure 4**, a circuit that the student can use. The circuit symbol for a step-up transformer is provided for you in **Figure 4**.

[2 marks]

Figure 4

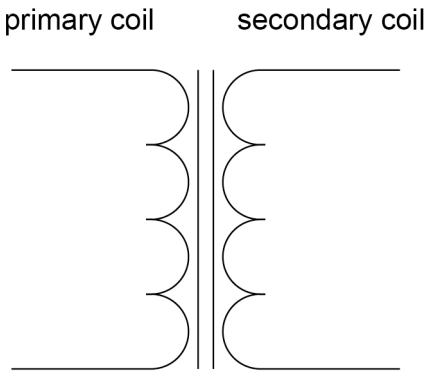

Do not write outside the box

0 3 . 2 The student wants to investigate the variation of the transformer's efficiency with output power. The input voltage is fixed at $6.0\ \mathrm{V}$ rms.

Describe a suitable procedure for this investigation using the circuit that you have drawn in **Figure 4**.
Your description should include:

- how the output power of the transformer is varied
- the measurements made and the types of meters used
- the procedure needed to ensure the accuracy of the measurements
- how the data are analysed.

[5 marks]

7

Do not write outside the box

0 4 A stationary wave is created in a column of air in a pipe that is open at one end. Sound from a small loudspeaker above the open end of the pipe creates the stationary wave.
Figure 5 shows a first-harmonic stationary wave in a pipe of length l.

Figure 5

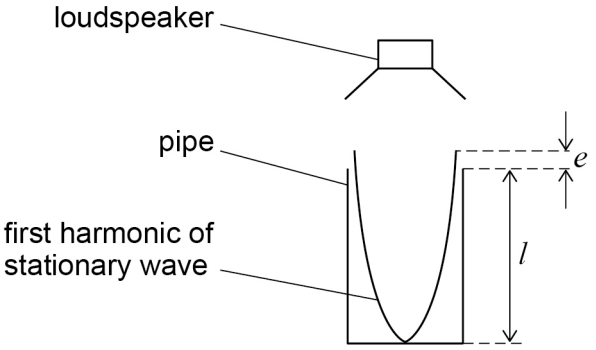

In practice, the stationary wave extends a short distance e above the end of the pipe. e is known as the end correction and is a constant for any particular pipe.

For this first harmonic, $\frac{\lambda}{4}$ occupies a length of $l + e$ where λ is the wavelength of the sound.

0 4 . 1 Show that $\frac{1}{f}$ is given by:

$$\frac{1}{f} = \frac{4}{v}l + \frac{4e}{v}$$

where v is the speed of sound in air and f is the frequency of the first harmonic.

[2 marks]

Do not write outside the box

Figure 6 shows apparatus used to determine the speed of sound in air.

An air column is created in the upper part of a measuring cylinder by partly filling the cylinder with water.

A loudspeaker connected to a signal generator is held above the air column.
The frequency of the sound is gradually increased from zero until the sound suddenly becomes much louder. At this point, the frequency f of the first harmonic of the stationary wave is equal to the frequency of the signal from the signal generator.

Figure 6

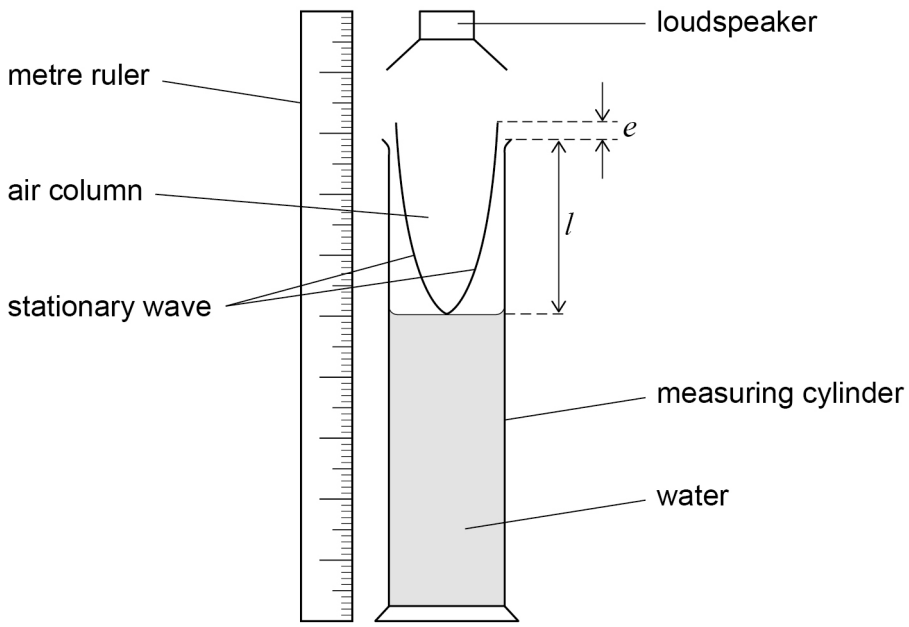

l is measured with a metre ruler.
f is recorded from the signal generator.

The length l of the air column is varied by changing the volume of water in the measuring cylinder.

f is measured for a range of values of l.

Question 4 continues on the next page

Do not write outside the box

Figure 7 is a plot of $\frac{1}{f}$ against l.

Figure 7

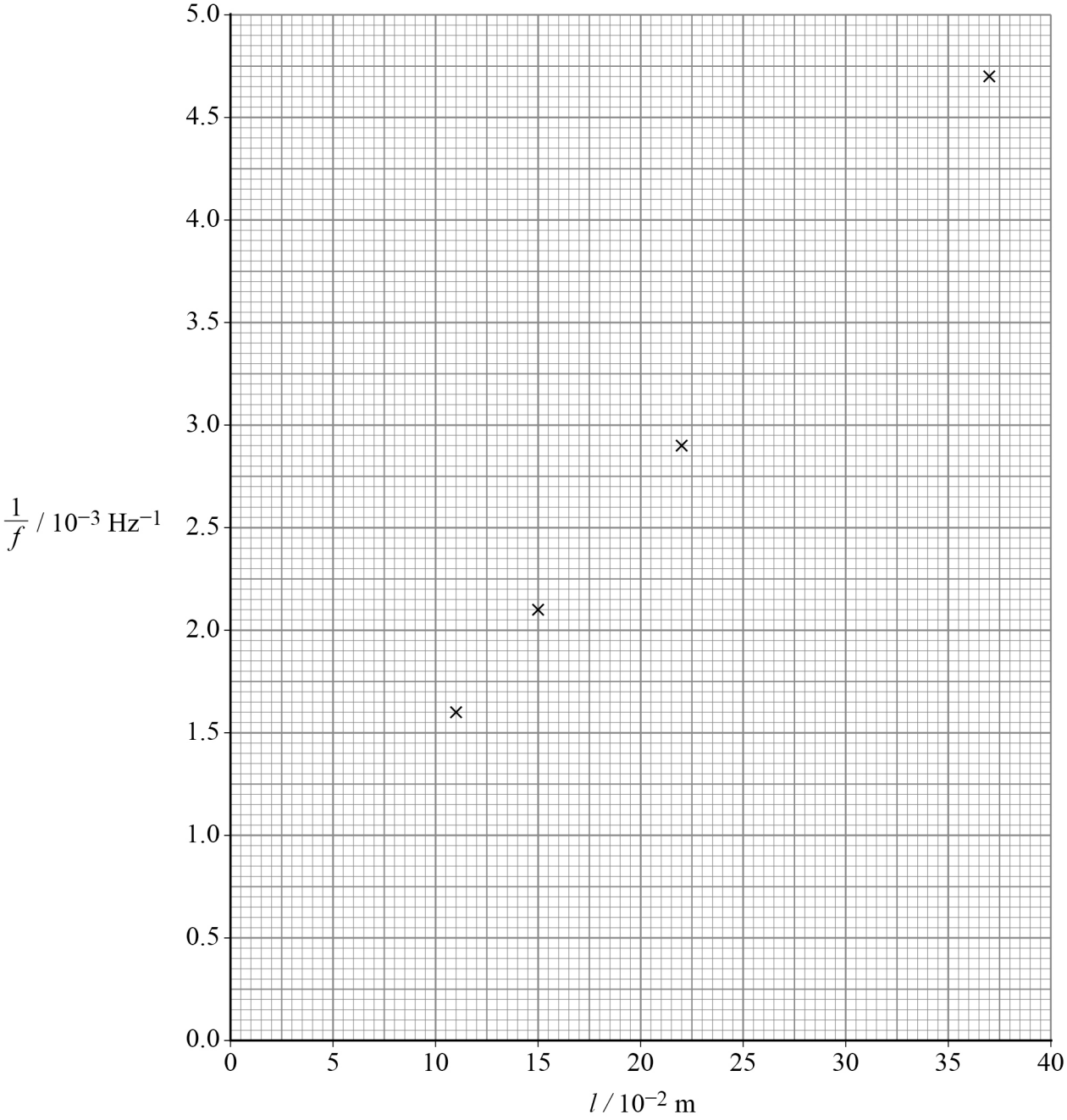

0 4 . 2 The values of l have an uncertainty of ± 0.5 cm. The uncertainty in $\frac{1}{f}$ is negligible.

Draw, on **Figure 7**, error bars to show the uncertainty in l.

[1 mark]

Do not write outside the box

0 4 . 3 Draw, on **Figure 7**, best-fit lines of the minimum and the maximum gradients consistent with the data.

[1 mark]

0 4 . 4 The best estimate of the gradient of the graph in **Figure 7** is $0.0119\ \mathrm{s\ m^{-1}}$.

Show that v is approximately $340\ \mathrm{m\ s^{-1}}$.

[1 mark]

0 4 . 5 Theory suggests that e is approximately $1.4\ \mathrm{cm}$.

Deduce whether the data in **Figure 7** support this theory.

[3 marks]

0 4 . 6 Suggest **two** improvements to the experimental method that would lead to a reduction in the uncertainties in your calculated values of v and e.

The uncertainty in f is negligible.

[2 marks]

1

2

10

END OF SECTION A

Do not write outside the box

Section B

Answer **all** questions in this section.

0 5 **Figure 8** shows a man cleaning windows on a tall building. He is attached by a harness and friction brake to a rope suspended from point **P** at the top of the building.

The rope has a mass of $18\ \mathrm{kg}$ and an unstretched length of $295\ \mathrm{m}$. The rope obeys Hooke's law.
The ground is $309\ \mathrm{m}$ below **P**.

The total mass of the man, including his equipment, is $98\ \mathrm{kg}$.

Figure 8

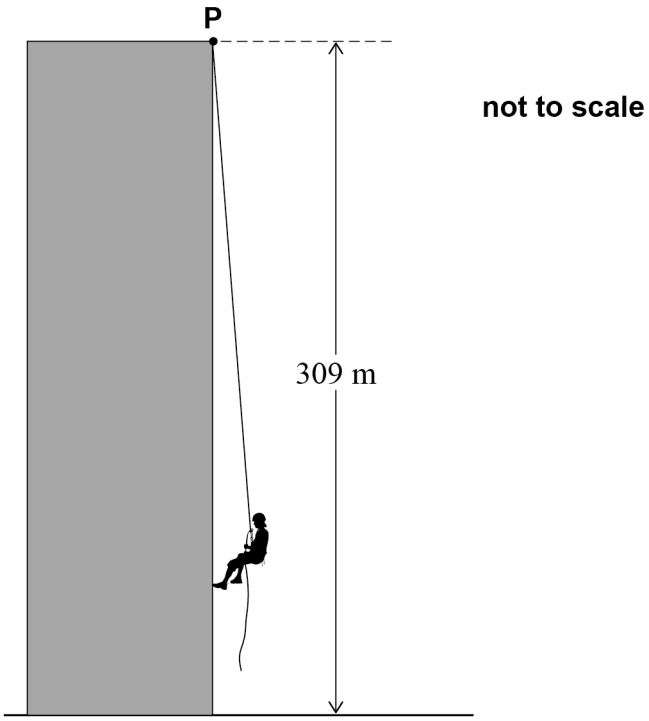

The friction brake exerts a force F on the rope.
The magnitude of F can be changed by adjusting the brake. The man adjusts the brake until he is sliding down the rope at a constant speed of $1.5\ \mathrm{m\ s^{-1}}$.

Do not write outside the box

0 5 . 1 Explain why the maximum tension in the rope is approximately $1140\ \mathrm{N}$ when the man is sliding down the rope at a constant speed of $1.5\ \mathrm{m\ s^{-1}}$.

[3 marks]

When the man arrives at a dirty window, he increases F. An impulse acts on him and he decelerates from $1.5\ \mathrm{m\ s^{-1}}$ to rest.

0 5 . 2 Show that the magnitude of this impulse is approximately $150\ \mathrm{N\ s}$.

[1 mark]

Question 5 continues on the next page

Do not write outside the box

0 5 . 3 **Figure 9** shows the variation of F with time. The graph starts before the impulse begins and extends for a short time after the impulse ends.

Figure 9

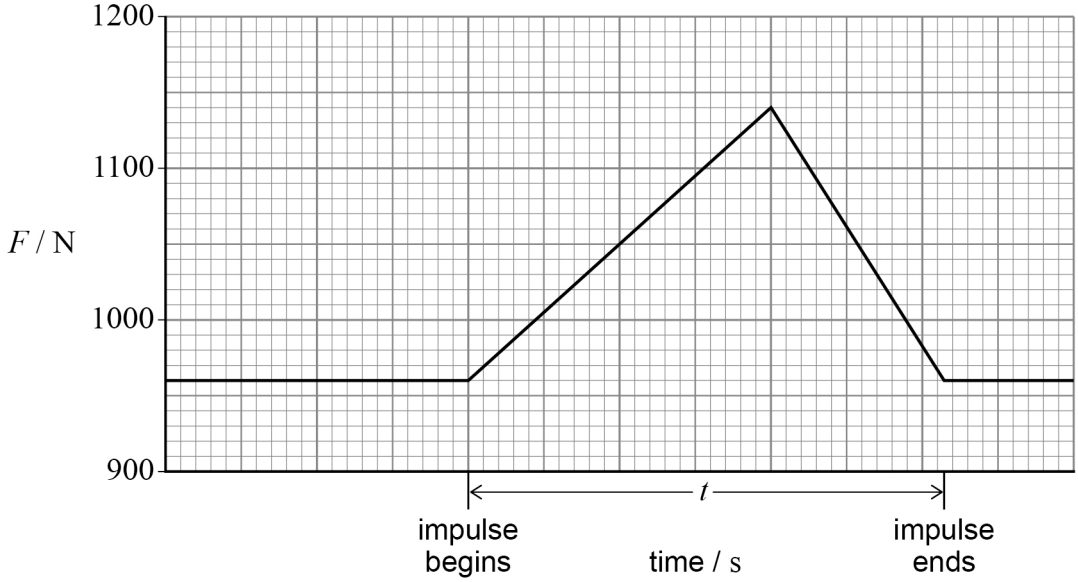

Determine t, the duration of the impulse.

[3 marks]

t = _____ s

Do not write outside the box

The man reaches the bottom of the rope and stops. He is now suspended in equilibrium above the ground.

0 5 . 4 Show that the average tension in the rope is now approximately 1050 N.

[2 marks]

0 5 . 5 Calculate the distance above the ground of the bottom end of the rope.

cross-sectional area of rope = $3.14\ \text{cm}^2$
Young modulus of the rope material = 3.51×10^8 Pa

[3 marks]

distance = _____ m

12

Turn over for the next question

Do not write outside the box

0 6 A car battery has an emf of 12.0 V.
A car's lights consist of two 36 W lamps and two 18 W lamps.
The battery can keep the car's lights on at full power for 8.0 h before the battery is discharged.

0 6 . 1 Calculate the energy that the battery transfers to the lights in 8.0 h.

[1 mark]

energy = _____ J

0 6 . 2 Calculate the charge that passes through the battery in 8.0 h.

[1 mark]

charge = _____ C

Figure 10 is a graph of current I against terminal potential difference V for a solar panel in full sunshine.

Figure 10

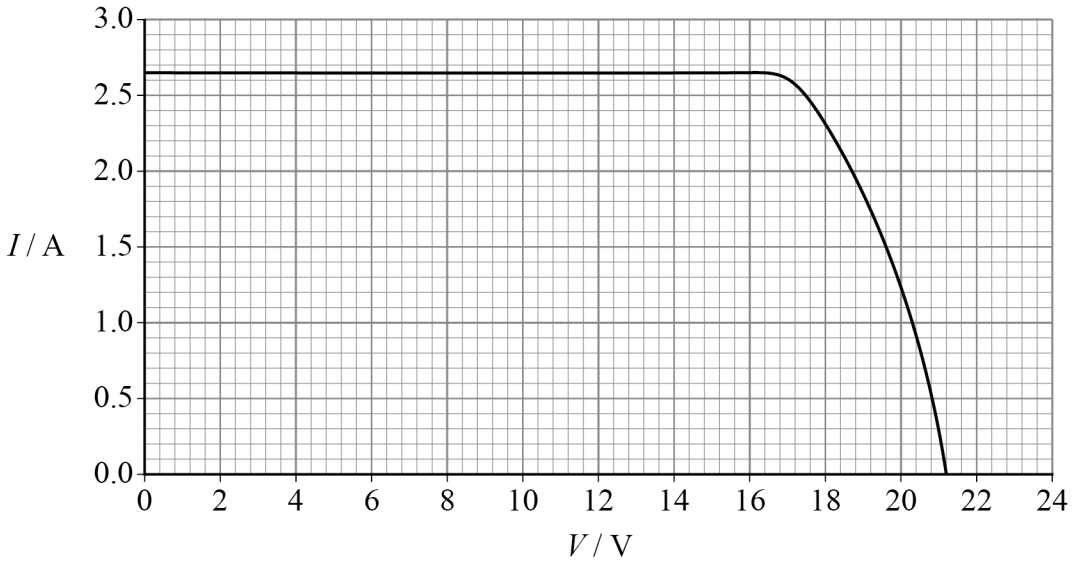

Do not write outside the box

Figure 11 shows a circuit that uses the solar panel and a semiconductor diode to charge the battery.

Figure 11

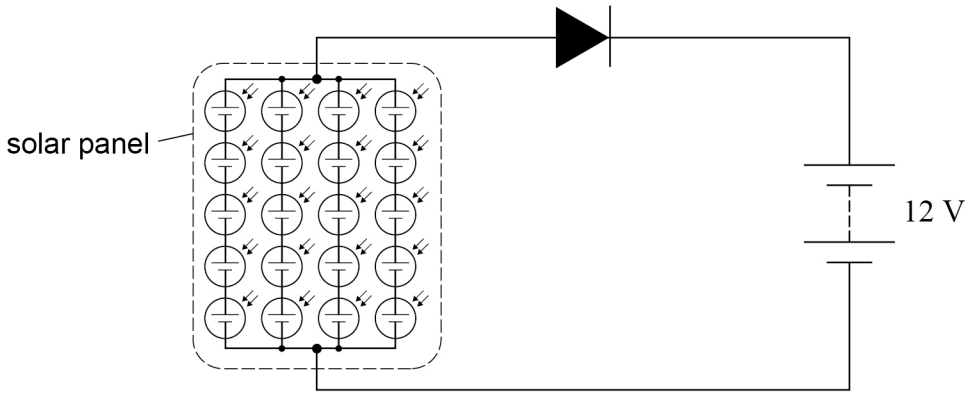

0 6 . 3 The panel is placed outside, initially in full sunshine, and the circuit is connected continuously for a period of 24 h.

Explain why the semiconductor diode is needed.

[2 marks]

_____

_____

_____

_____

_____

0 6 . 4 When the battery is connected as shown in **Figure 11** the terminal potential difference of the solar panel becomes equal to the sum of the battery emf and the pd across the diode.
The pd across the diode is 0.60 V.
The emf of the battery remains constant at 12 V.

Determine the power P delivered by the solar panel when it is in full sunshine.

[2 marks]

$P =$ _____ W

Question 6 continues on the next page

Do not write outside the box

0 6 . 5 State and explain the value of V when the solar panel delivers its maximum possible power in full sunshine.

[2 marks]

When the battery is connected as shown in **Figure 11** the solar panel delivers significantly less than its maximum possible power.
The circuit in **Figure 12** can be used to ensure that the solar panel is operating closer to its maximum possible power.

Figure 12

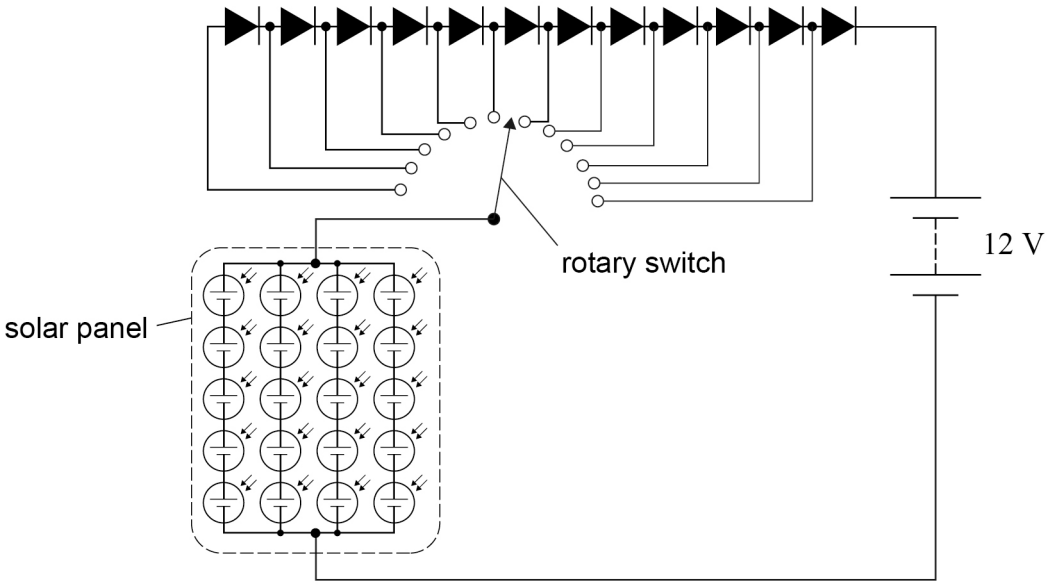

Between one and twelve diodes can be included in the circuit by selecting the position of the rotary switch.

Do not write outside the box

0 6 . 6 Explain how the circuit in **Figure 12** can be used to ensure that the solar panel is operating at its maximum possible power.

In your explanation, suggest the number of diodes needed in the circuit.

[2 marks]

10

Turn over for the next question

Do not write outside the box

0 7 **Figure 13** shows a model steam turbine that consists of a hollow metal cylinder supported on a vertical axis by two bearings. The cylinder can rotate about this vertical axis.
Initially, the cylinder contains $0.010\ \text{kg}$ of water and is stationary. A burner heats the water which starts to boil.
The cylinder begins to rotate when jets of steam first emerge from the four nozzles. Steam is ejected at the same steady rate from each nozzle.

Figure 13

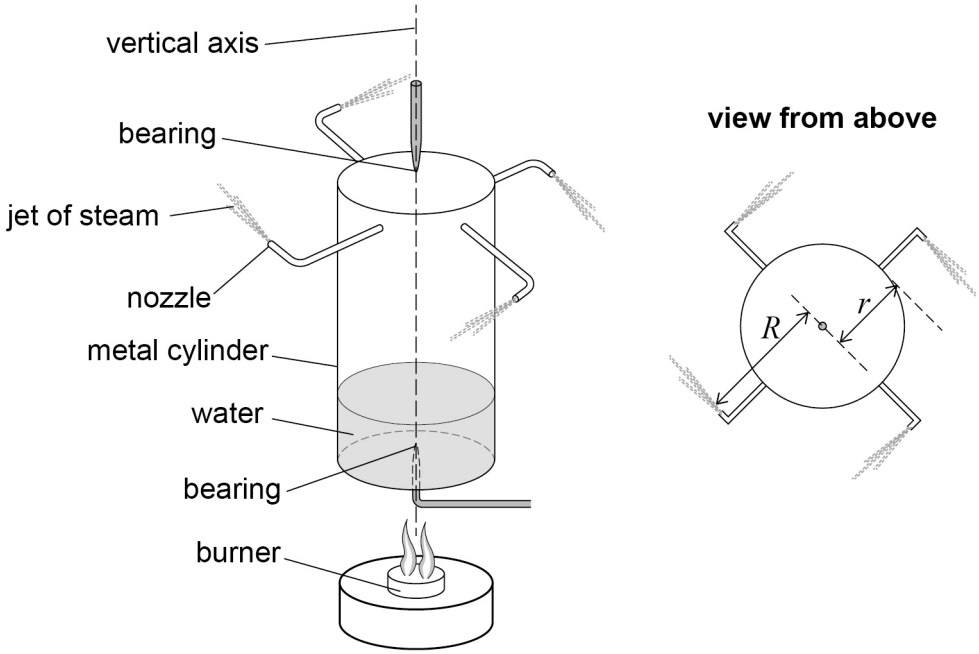

The water in the cylinder starts to boil at time $t = 0$ and is completely boiled away at $t = 355\ \text{s}$.

0 7 . 1 Show that during this time the rate of heat transfer to the water in the cylinder is approximately $64\ \text{W}$.

specific latent heat of water $= 2260\ \text{kJ kg}^{-1}$

[2 marks]

Do not write outside the box

0 7 . 2 Assume that all of the heat transfer takes place through the base of the metal cylinder.

Estimate the temperature difference across the base of the cylinder.

thermal conductivity of metal = $111\ \mathrm{W\ m^{-1}\ K^{-1}}$
radius r of cylinder = $1.60 \times 10^{-2}\ \mathrm{m}$
thickness of base of the cylinder = $1.2 \times 10^{-3}\ \mathrm{m}$

[3 marks]

temperature difference = _____ K

0 7 . 3 Show that approximately $7\ \mathrm{mg}$ of steam is ejected from each nozzle per second.

[2 marks]

0 7 . 4 Explain why the cylinder experiences a resultant torque.
Refer to momentum in your answer.

[3 marks]

_____

_____

_____

_____

_____

_____

_____

_____

Question 7 continues on the next page

Do not write outside the box

Figure 14 shows the variation of the cylinder's rotational frequency with time from $t = 0$ to $t = 225$ s.

Figure 14

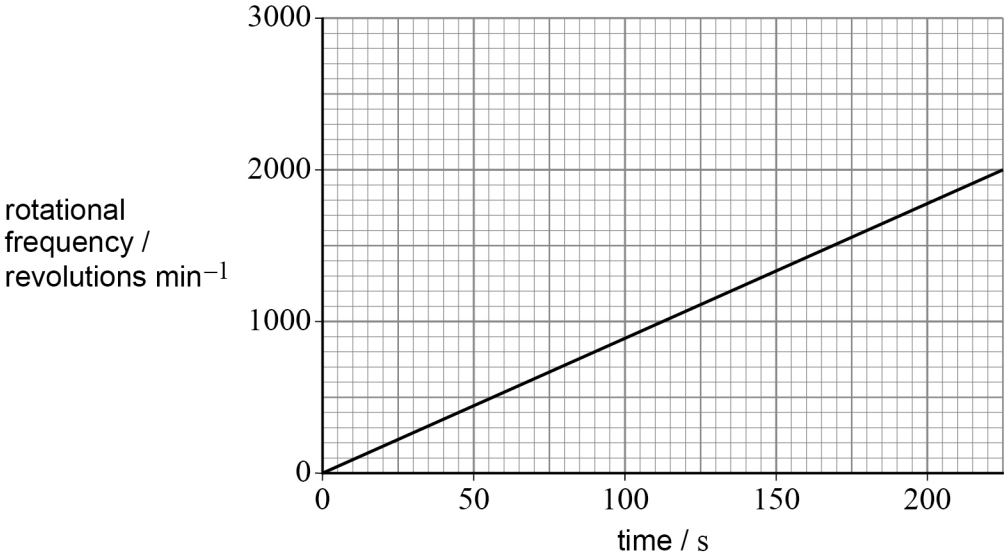

0 7 . 5 Calculate the angular acceleration of the cylinder from $t = 0$ to $t = 225$ s.

[3 marks]

angular acceleration = _____ rad s^{-2}

Do not write outside the box

0 7 . 6 The ejection of steam from the nozzles exerts a total torque of 1.94×10^{-4} N m on the cylinder.
The perpendicular distance R from the nozzle to the axis of rotation, as shown in **Figure 13**, is 2.5 cm.

Calculate the speed at which steam is ejected from one nozzle.

[3 marks]

speed = _____ m s^{-1}

Question 7 continues on the next page

Do not write outside the box

Figure 15 shows the variation of the rotational frequency with time until the cylinder stops rotating.

Figure 15

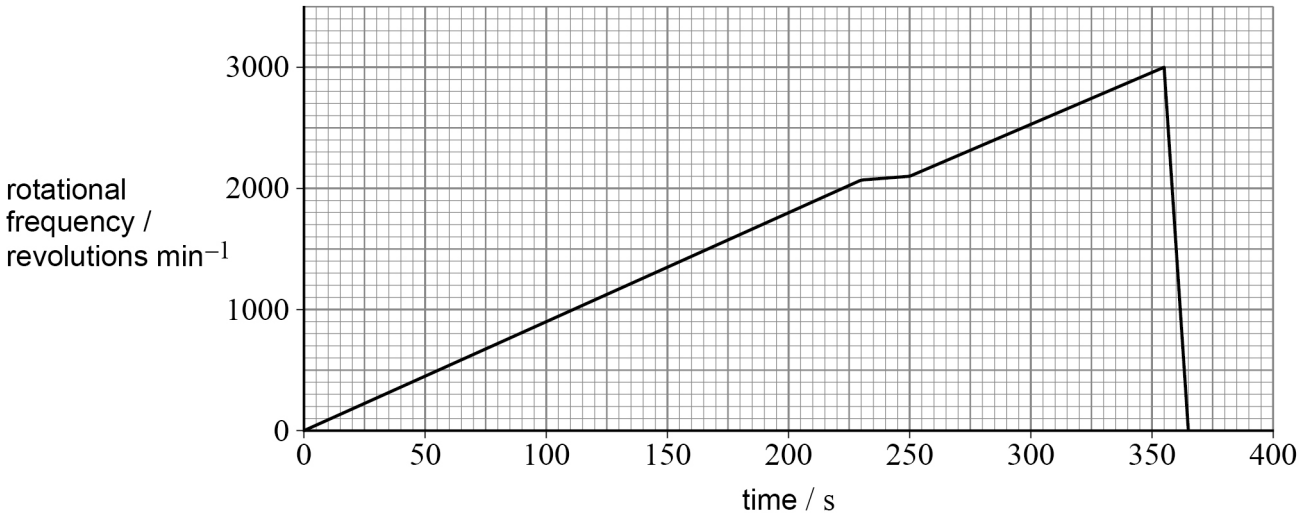

0 7 . 7 The cylinder experiences a frictional torque.

Explain, without calculation, how the magnitude of the frictional torque can be determined using data from **Figure 15**.

The moment of inertia of the cylinder is known.

[3 marks]

Do not write outside the box

0 7 . 8 The centre of mass of the cylinder does not exactly coincide with its vertical axis. This causes the cylinder to vibrate slightly as it rotates.

Between $t = 230$ s and $t = 250$ s, the angular acceleration of the cylinder decreases significantly and the cylinder vibrates with a greater amplitude.

After $t = 250$ s, the amplitude of these vibrations decreases and the angular acceleration increases again.

Suggest an explanation for the changes in amplitude of vibration and for the changes in angular acceleration.

[3 marks]

_____

_____

_____

_____

_____

_____

_____

_____

22

END OF QUESTIONS

Do not write outside the box

There are no questions printed on this page

DO NOT WRITE ON THIS PAGE
ANSWER IN THE SPACES PROVIDED

Do not write outside the box

Question number	**Additional page, if required.** **Write the question numbers in the left-hand margin.**

Do not write outside the box

Question number	**Additional page, if required.** **Write the question numbers in the left-hand margin.**

Do not write outside the box

Question number	**Additional page, if required.** **Write the question numbers in the left-hand margin.**

Do not write outside the box

There are no questions printed on this page

DO NOT WRITE ON THIS PAGE
ANSWER IN THE SPACES PROVIDED

Copyright information

For confidentiality purposes, all acknowledgements of third-party copyright material are published in a separate booklet. This booklet is published after each live examination series and is available for free download from www.oxfordaqaexams.org.uk.

Permission to reproduce all copyright material has been applied for. In some cases, efforts to contact copyright-holders may have been unsuccessful and Oxford International AQA Examinations will be happy to rectify any omissions of acknowledgements. If you have any queries please contact the Copyright Team.

Copyright © 2022 Oxford International AQA Examinations and its licensors. All rights reserved.