OXFORD
INTERNATIONAL
AQA EXAMINATIONS

Please write clearly in block capitals.

Centre number | | | | | |  Candidate number | | | | |

Surname _____

Forename(s) _____

Candidate signature _____
I declare this is my own work.

# INTERNATIONAL A-LEVEL
# PHYSICS

## Unit 5 Physics in practice

Wednesday 27 January 2021 07:00 GMT Time allowed: 2 hours

**Materials**
For this paper you must have:
- a Data and Formulae Booklet as a loose insert
- a ruler with millimetre measurements
- a scientific calculator, which you are expected to use where appropriate
- a protractor.

**Instructions**
- Use black ink or black ball-point pen.
- Fill in the boxes at the top of this page.
- Answer **all** questions.
- You must answer the questions in the spaces provided. Do not write outside the box around each page or on blank pages.
- All working must be shown.
- If you need extra space for your answer(s), use the lined pages at the end of this book. Write the question number against your answer(s).
- Do all rough work in this book. Cross through any work you do not want to be marked.

**Information**
- The marks for questions are shown in brackets.
- The maximum mark for this paper is 80.

| For Examiner's Use | |
|---|---|
| Question | Mark |
| 1 | |
| 2 | |
| 3 | |
| 4 | |
| 5 | |
| 6 | |
| 7 | |
| **TOTAL** | |

Do not write outside the box

## Section A

Answer **all** questions in this section.

**0 1** **Figure 1** shows a ruler resting on two supports. A load of mass $m$ is suspended from the centre of the ruler.
The deflection $d$ of the centre of the ruler is measured.

**Figure 1**

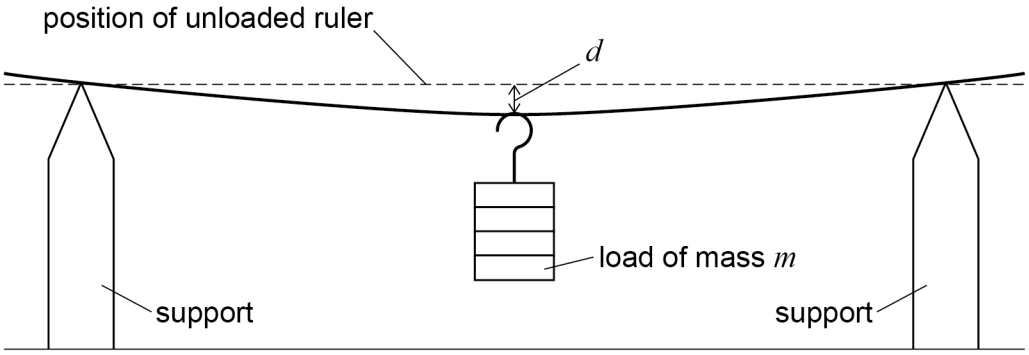


**0 1 . 1** The deflection $d$ is found for a range of values of $m$.
These data are plotted on **Figure 2** including error bars for the values of $d$.
The line of maximum gradient $\mu_{max}$ consistent with the data is also shown.

Draw, on **Figure 2**, the line of minimum gradient consistent with the data.

**[1 mark]**

**0 1 . 2** Determine the gradient $\mu_{min}$ of the line that you have drawn in Question **01.1**.

**[2 marks]**

$\mu_{min}$ = _____ m kg$^{-1}$

Do not write outside the box

**Figure 2**

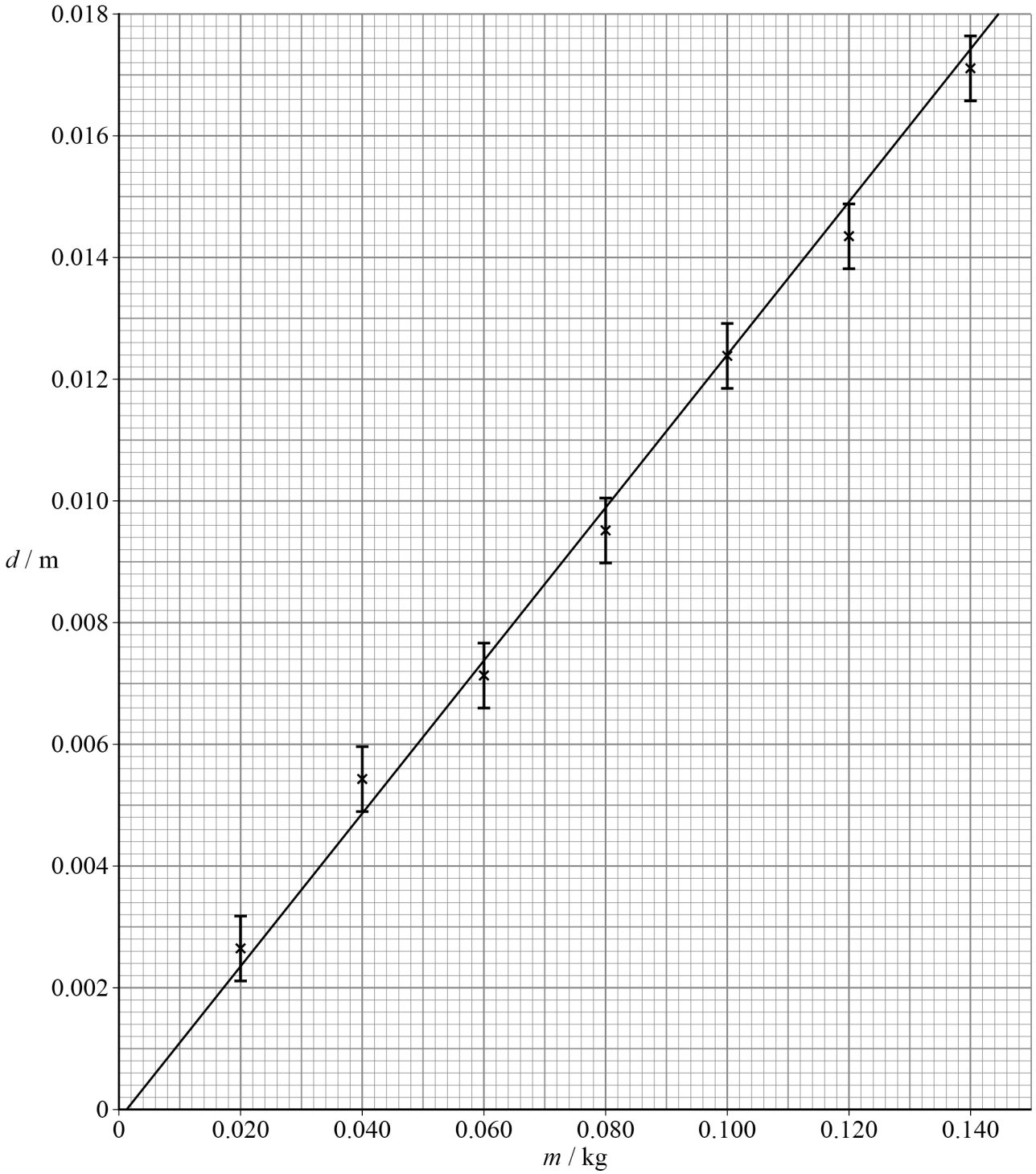


**Question 1 continues on the next page**

Do not write outside the box

**0 1 . 3** The gradient $\mu_{max}$ shown in **Figure 2** is $0.126\ \mathrm{m\ kg^{-1}}$.

Estimate $\mu$, the value of the best gradient of the graph in **Figure 2**.

**[1 mark]**

$\mu =$ _____ $\mathrm{m\ kg^{-1}}$

**0 1 . 4** Estimate the percentage uncertainty in $\mu$.

**[2 marks]**

percentage uncertainty in $\mu = \pm$ _____

Do not write outside the box

**0 1 . 5** The amount that the ruler deforms depends on the Young modulus $E$ of the ruler material and other properties of the ruler.

It can be shown that $E = \frac{k}{\mu}$ where $k$ is a constant.

For this ruler, $k = 1.79 \times 10^9\ \text{s}^{-2}$.

Calculate $E$.

**[1 mark]**

$E =$ _____ Pa

**0 1 . 6** The uncertainty in $k$ is negligible.

Calculate the absolute uncertainty in $E$.

**[1 mark]**

absolute uncertainty in $E = \pm$ _____ Pa

8

**Turn over ►**

Do not write outside the box

**There are no questions printed on this page**

**DO NOT WRITE ON THIS PAGE**
**ANSWER IN THE SPACES PROVIDED**

Do not write outside the box

**0 2** **Figure 3** shows apparatus used to investigate the oscillations of a bar magnet. The magnet is held in a paper cradle. The paper cradle is suspended horizontally by threads from a wooden rod.

**Figure 3**

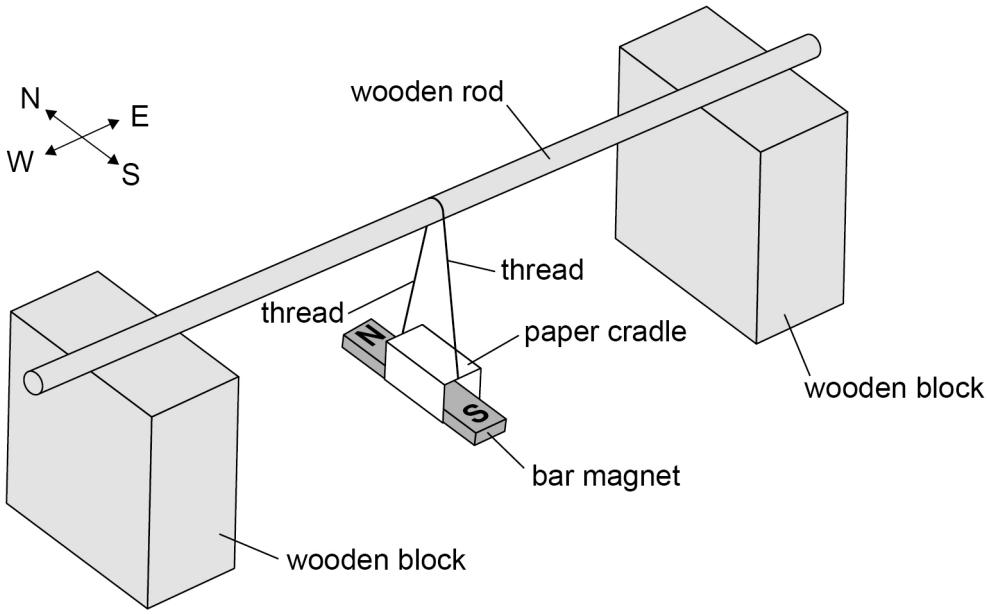


Initially, the magnet is at rest parallel to the horizontal component of the Earth's magnetic field with its N pole towards the north. The magnet is displaced and released so that it oscillates about a vertical axis through its centre, as shown in **Figure 4**.

**Figure 4**

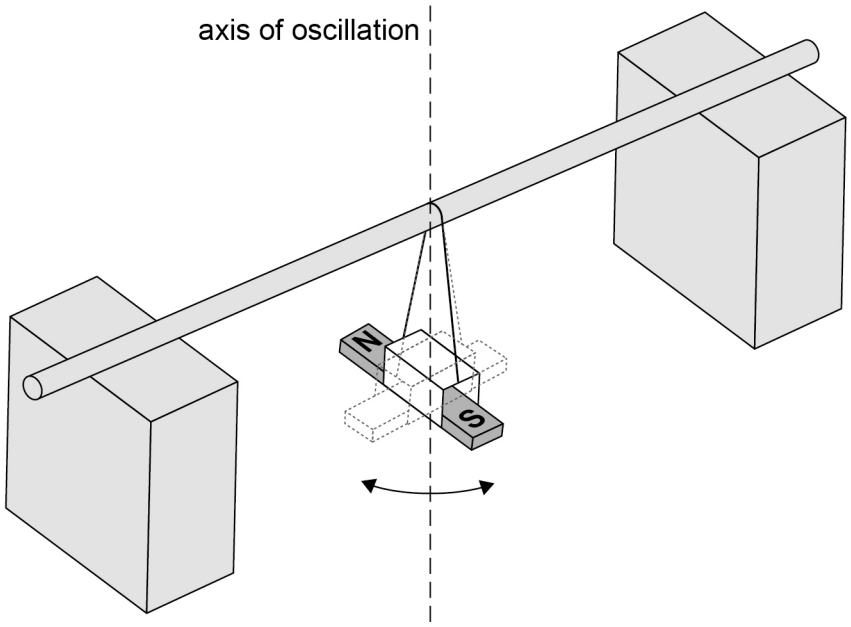


**Question 2 continues on the next page**

Do not write outside the box

**0 2 . 1** The time $T$ for one oscillation is determined five times.
The values for $T$ are shown in **Table 1**.

**Table 1**

| $T$ / s | 1.07 | 1.04 | 1.01 | 1.03 | 1.05 |
|---|---|---|---|---|---|

Calculate $T_N$, the mean value of $T$.

**[1 mark]**

$T_N$ = _____ s

**0 2 . 2** Calculate a value for the absolute uncertainty in $T_N$.

**[1 mark]**

absolute uncertainty in $T_N = \pm$ _____ s

**0 2 . 3** State and explain how a fiduciary marker and a stopwatch can be used to make an accurate determination of $T_N$.

**[3 marks]**

_____

_____

_____

_____

_____

_____

_____

_____

_____

Do not write outside the box

**0 2 . 4** Calculate the percentage uncertainty in $f_N^2$, the mean frequency of the oscillations.

**[2 marks]**

percentage uncertainty in $f_N^2$ = _____

In a second experiment, the bar magnet is positioned horizontally with the S pole pointing north. The same procedure is then followed to determine the mean time $T_S$ for one oscillation.

Theory predicts that

$$f_N^2 - f_S^2 = kB_H$$

where

$f_S$ is the frequency of the oscillations in the second experiment
$B_H$ is the horizontal component of the Earth's magnetic flux density
$k$ is a constant for the system.

**0 2 . 5** Calculate a value for $k$.

State your answer to an appropriate number of significant figures.
State an appropriate unit for your answer.

$B_H = 2.1 \times 10^{-5}$ T
$T_S = 1.39$ s

**[3 marks]**

$k$ = _____

unit = _____

10

**Turn over ►**

Do not write outside the box

**0 3** **Figure 5** shows the apparatus used to investigate the motion of a small solid sphere.

The sphere, of mass $m$, is released from rest. It rolls, without slipping, down an inclined track through a vertical distance $h$.

As the sphere leaves the track it has a linear velocity $v$ and an angular speed $\omega$.

The sphere then falls freely. It hits the floor a horizontal distance $d$ from the end of the track.

**Figure 5**

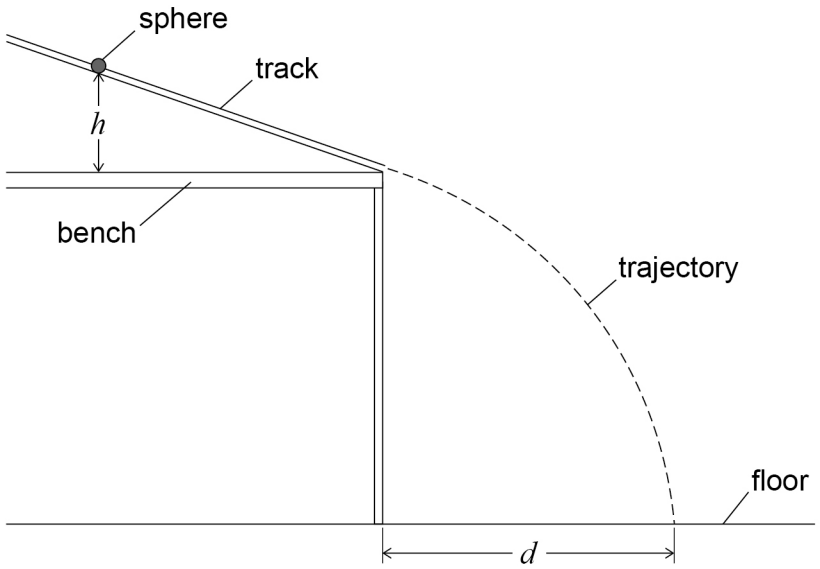


**0 3 . 1** The principle of conservation of energy suggests that

$$mgh = \frac{1}{2}mv^2 + \frac{1}{2}I\omega^2$$

The moment of inertia of the sphere $I = \frac{2}{5}mr^2$ where $r$ is the radius of the sphere.

Show that $v = \sqrt{\frac{10gh}{7}}$

**[2 marks]**

Do not write outside the box

**0 3 . 2** A student suggests that $d$ is directly proportional to $h$.

Describe an experiment, using the apparatus in **Figure 5**, to test this suggestion.

Your answer should include details of:

- any other apparatus required
- the measurements required
- the procedure needed to find accurate values for $d$
- the analysis of the data.

You may add to **Figure 5** to support your answer.

**[5 marks]**

7

Do not write outside the box

**0 4** **Figure 6** shows a continuous loop of uniform resistance wire connected into a circuit. Crocodile clips **A** and **B** are connected to points on the loop. The straight-line distance $x$ between **A** and **B** is measured using a metre ruler.
The total length of wire in the loop is $L$.

**Figure 6**

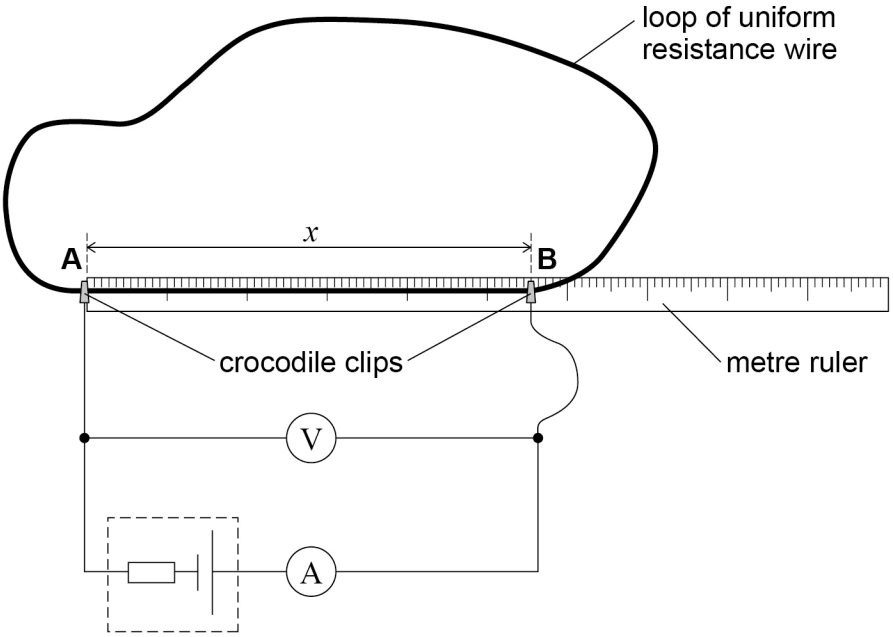


The current $I$ in the cell is measured using an ammeter.
The potential difference $V$ between **A** and **B** is measured using a voltmeter.
$V$ and $I$ are both measured for a range of values of $x$.

**Table 2** shows data from the experiment.

**Table 2**

| $x$ / m | $V$ / V | $I$ / A |
|---|---|---|
| 0.150 | 1.37 | 0.610 |
| 0.250 | 1.43 | 0.395 |
| 0.350 | 1.46 | 0.306 |
| 0.450 | 1.48 | 0.260 |
| 0.550 | 1.49 | 0.224 |
| 0.650 | 1.50 | 0.201 |
| 0.750 | 1.50 | 0.192 |

Do not write outside the box

**0 4 . 1** Draw, on **Figure 7**, a graph of $I$ against $x$.

**[5 marks]**

**Figure 7**

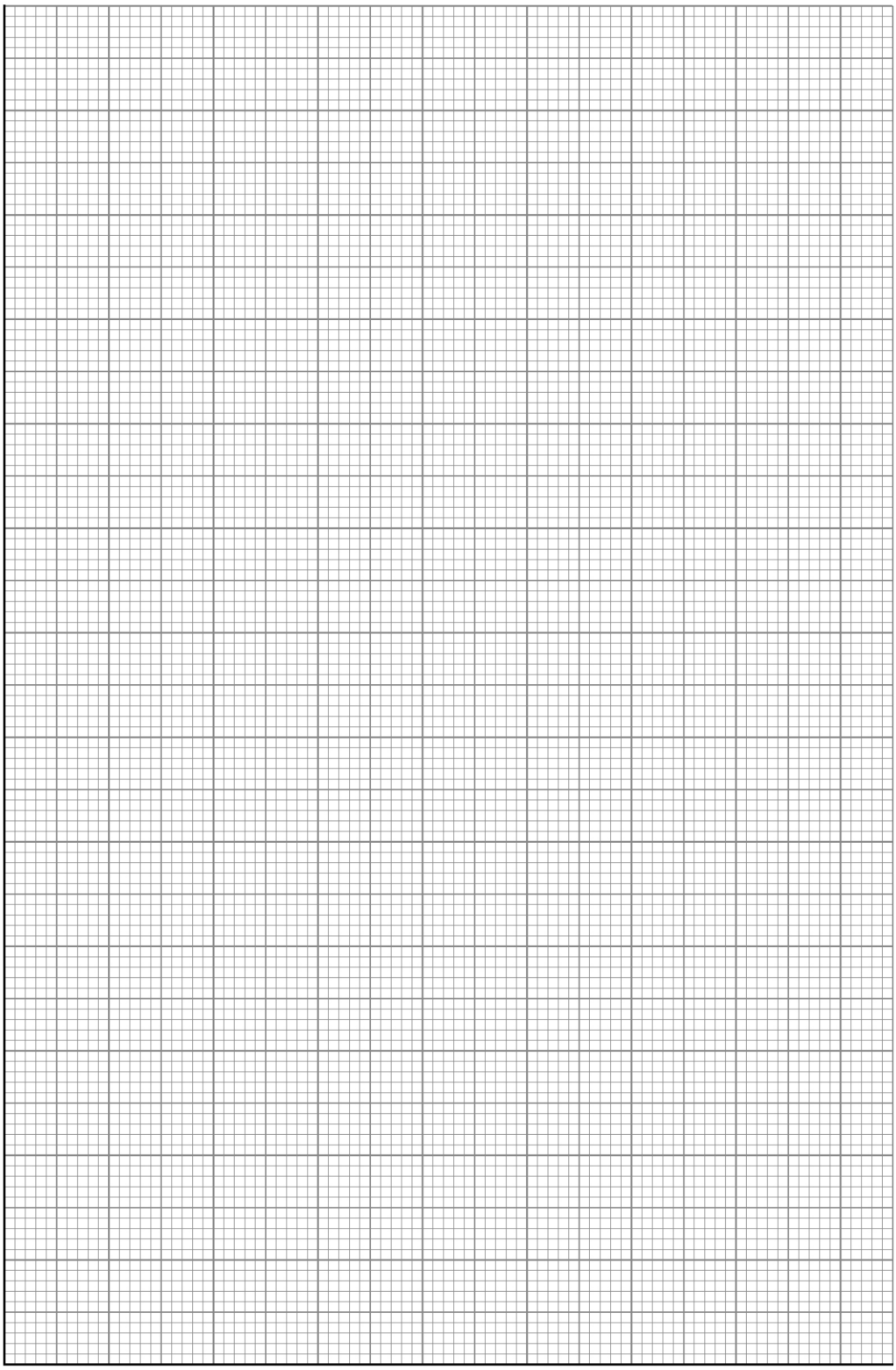

**Question 4 continues on the next page**

Do not write outside the box

**0 4 . 2** Determine, using **Figure 7**, a value for $I$ when $x = 0.400$ m.
Show your working on **Figure 7**.

**[1 mark]**

$I =$ _____ A

**0 4 . 3** Theory predicts that

$$I = \frac{LV}{k(Lx - x^2)}$$

For the data shown in **Table 2**, $L$ is $2.2$ m.

Determine, for $x = 0.400$ m, a value for $k$.
State an appropriate unit for $k$.

**[3 marks]**

$k =$ _____

unit = _____

Do not write outside the box

**0 4 . 4** Explain why $V$ increases as $x$ increases for the range of data in **Table 2**.

**[2 marks]**

11

**END OF SECTION A**

Do not write outside the box

## Section B

Answer **all** questions in this section.

**0 5** This question is about comparing the surface conditions on Earth with those on K2-18b, a recently discovered planet.

K2-18b orbits the star K2-18. K2-18 is a distance $D$ from Earth.

**Table 3** shows data for the planets Earth and K2-18b.

**Table 3**

| | **Earth** | **K2-18b** |
|---|---|---|
| **Mass of planet / kg** | $5.98 \times 10^{24}$ | $5.33 \times 10^{25}$ |
| **Radius of planet / m** | $6.37 \times 10^{6}$ | $1.43 \times 10^{7}$ |
| **Orbital radius of planet / m** | $1.50 \times 10^{11}$ | $2.14 \times 10^{10}$ |

**0 5 . 1** Show that the gravitational field strength $g_k$ at the surface of K2-18b is given by

$$g_k = \left(\frac{R_E}{R_K}\right)^2 \left(\frac{M_K}{M_E}\right) g_E$$

where

$g_E$ is the gravitational field strength at the surface of the Earth

$R_E$ is the radius of the Earth

$R_K$ is the radius of K2-18b

$M_E$ is the mass of the Earth

$M_K$ is the mass of K2-18b.

**[2 marks]**

Do not write outside the box

**0 5 . 2** Calculate $g_k$.

**[1 mark]**

$g_k$ = _____ $N\ kg^{-1}$

**0 5 . 3** Calculate, in Earth days, the orbital period for K2-18b.

mass of the star K2-18 = $8.22 \times 10^{29}$ kg

**[3 marks]**

orbital period for K2-18b = _____ Earth days

**Question 5 continues on the next page**

Do not write outside the box

**Table 4** shows data for the two stars: the Sun and K2-18.

**Table 4**

| | **Sun** | **K2-18** |
|---|---|---|
| **Radius of star / m** | $6.96 \times 10^{8}$ | $3.26 \times 10^{8}$ |
| **Power output of star / W** | $3.85 \times 10^{26}$ | $9.01 \times 10^{24}$ |

**0 5 . 4** Compare the intensity of the radiation received by planet K2-18b from its star K2-18 with the intensity of the solar radiation received by the Earth from the Sun.

**[3 marks]**

Do not write outside the box

**0 5 . 5** **Figure 8** shows two rays of light from the Sun arriving at a point **E** on Earth.
The Sun subtends an angle of $\theta_1$ at point **E**.

**Figure 8**

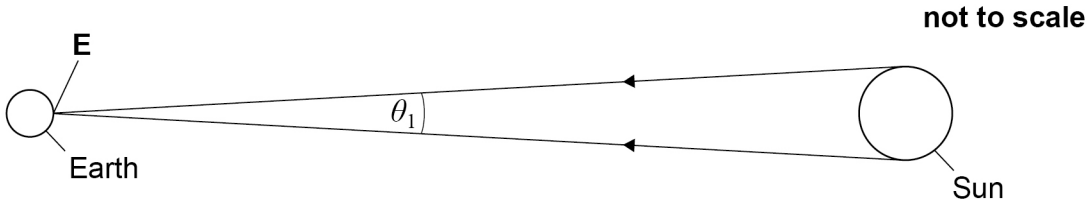


$\theta_2$ is the angle subtended at point **E** on Earth by the star K2-18.

$$\frac{\theta_1}{\theta_2} = 1.67 \times 10^7$$

Calculate the distance $D$ between the Earth and star K2-18.

**[3 marks]**

$D =$ _____ m

**0 5 . 6** Light from K2-18 passes through the atmosphere of K2-18b. This light is detected and analysed when it arrives at the Earth.

State how the wavelengths present in this light can be determined.
Go on to explain how this gives information about the elements present in the atmosphere of K2-18b.

**[2 marks]**

_____

_____

_____

_____

_____

_____

14

**Turn over ►**

Do not write outside the box

**0 6** Nailers are designed to force nails into wood.
**Figure 9** shows the main parts of a nailer that is operated by compressed air.

**Figure 9**

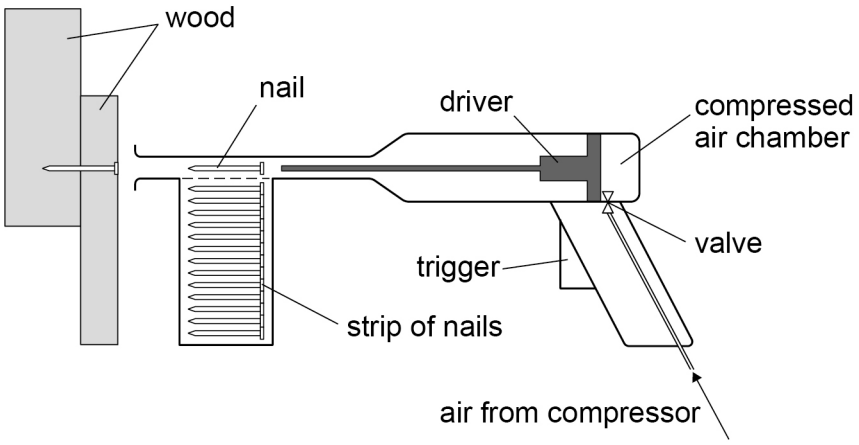


$9.8 \times 10^{-3}$ mol of air is fed into the compressed air chamber through a valve. The valve then closes.
The air is now at a temperature of 295 K and a pressure of $8.0 \times 10^{5}$ Pa.
When the trigger is pressed, this air expands rapidly, pushing the driver forward.
The driver hits the nail, breaking it free from the strip and forcing the nail into the wood.

**Figure 10** is a $p$–$V$ diagram for the compressed air as it expands.

**Figure 10**

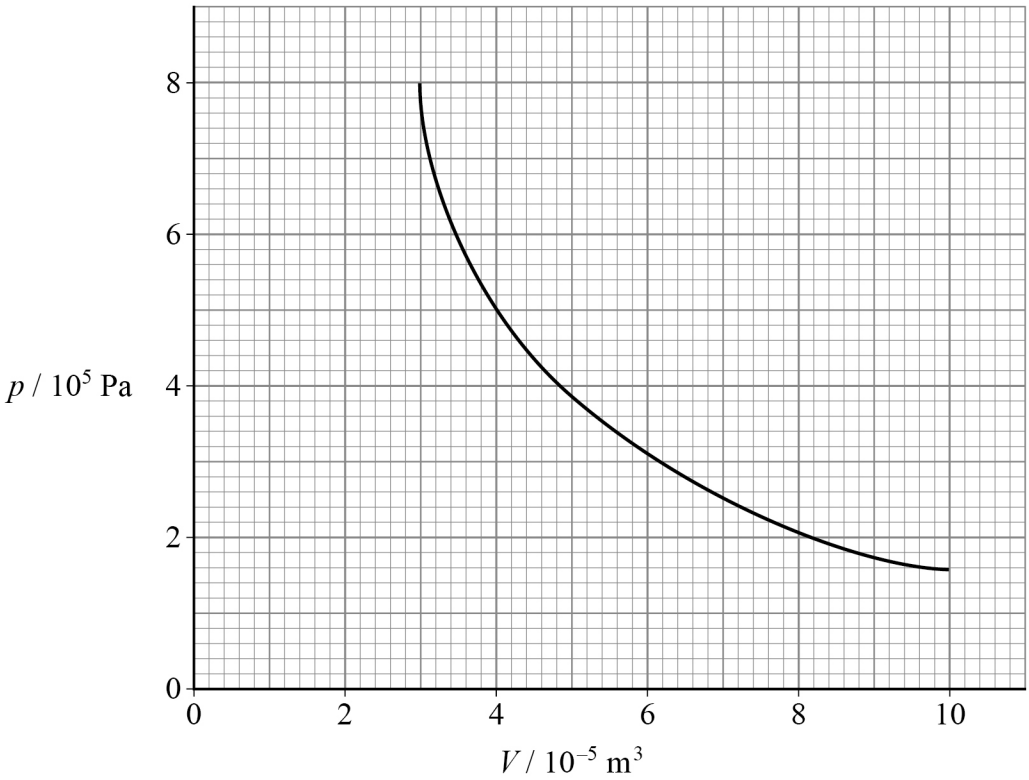

Do not write outside the box

**0 6 . 1** Show that the energy available to the driver as the compressed air expands is approximately 23 J.

**[3 marks]**

**0 6 . 2** Only 40% of the energy available from the expanding air is transferred to the nail. 1.9 J of the energy transferred to the nail is used to separate the nail from the strip. The nail is driven 3.5 cm into the wood.

Calculate the average resistance force of the wood on the nail.

**[3 marks]**

average resistance force = _____ N

**0 6 . 3** Calculate the temperature of the air just after it has expanded to a volume of $10 \times 10^{-5}$ m$^3$.

**[2 marks]**

temperature = _____ K

**Question 6 continues on the next page**

Do not write outside the box

**0 6 . 4** The pressure of the air in the compressed air chamber decreases as its volume increases.

Explain this decrease, with reference to the kinetic theory model.

**[2 marks]**

**Figure 11** shows another type of nailer.
This nailer uses the energy stored in a compressed spring.

**Figure 11**

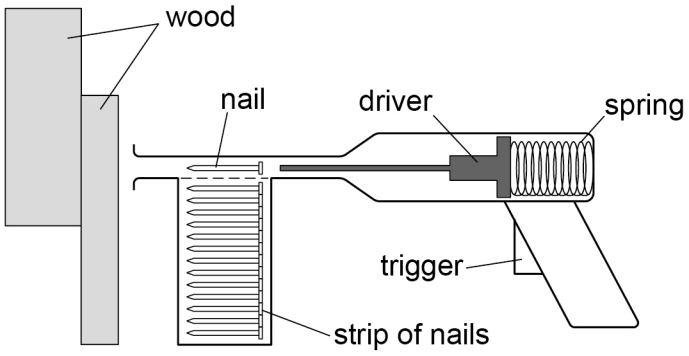


The spring stores an energy of 25 J when it is fully compressed.
When the trigger is pressed, the spring transfers this energy to the nail, forcing it into the wood.
An electric motor then automatically compresses the spring ready for the next nail.
The motor has a power output of 190 W. The motor is powered by an 18 V, 1.5 A h battery. The battery has negligible internal resistance.

**0 6 . 5** Calculate the minimum time between one nail being delivered and the next.

**[1 mark]**

minimum time = _____ s

Do not write outside the box

**0 6 . 6** Estimate the number of nails that can be delivered using a freshly charged battery before it needs to be recharged.
Assume that the motor is 100% efficient.

**[1 mark]**

number of nails = _____

12

**Turn over for the next question**

Do not write outside the box

**0 7** **Figure 12** shows a drone that has four motor-propeller units. Each propeller **P**, **Q**, **R** and **S** is driven by its own motor.
The drone has a mass of $1.6\ \mathrm{kg}$.

**Figure 12**

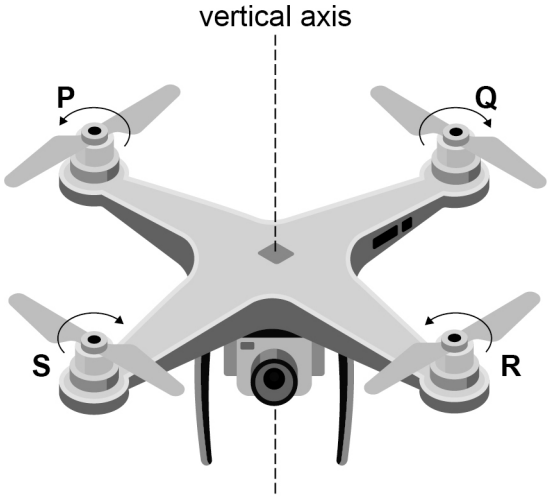


Initially, the drone hovers in one place at a constant height and does not rotate about its vertical axis.

**0 7 . 1** Explain why it is necessary to have two propellers rotating clockwise and two propellers rotating anti-clockwise.

**[2 marks]**

Do not write outside the box

**Figure 13** shows the variation of thrust $F$ with current $I$ for **one** motor-propeller unit up to its maximum current of $21\ \mathrm{A}$.

**Figure 13**

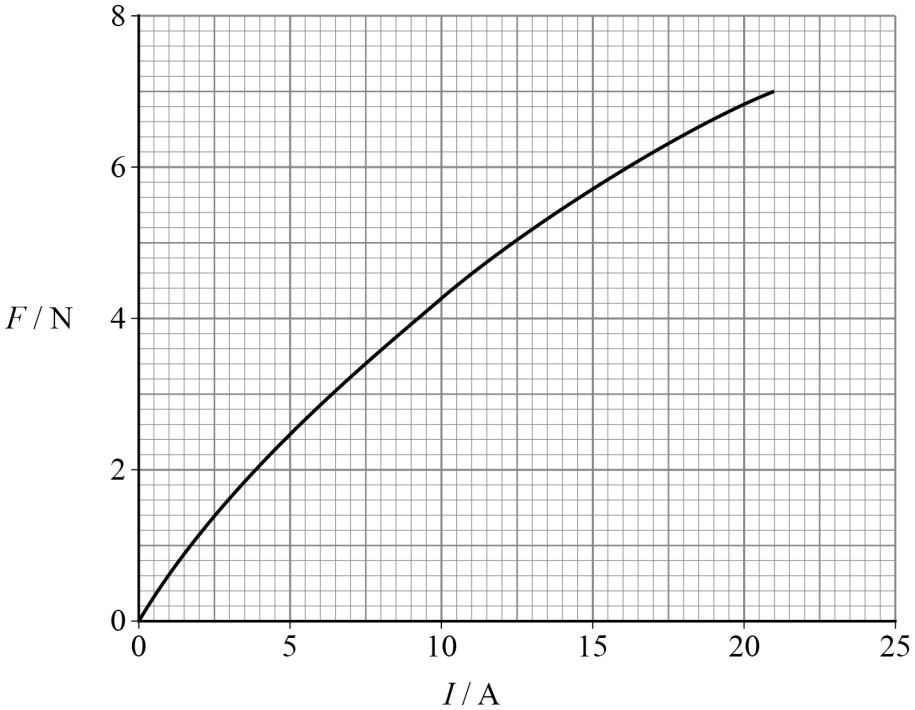


**Figure 14** shows how each motor is connected in parallel with a $12\ \mathrm{V}$ battery. The current in each motor can be varied using a variable resistor.

**Figure 14**

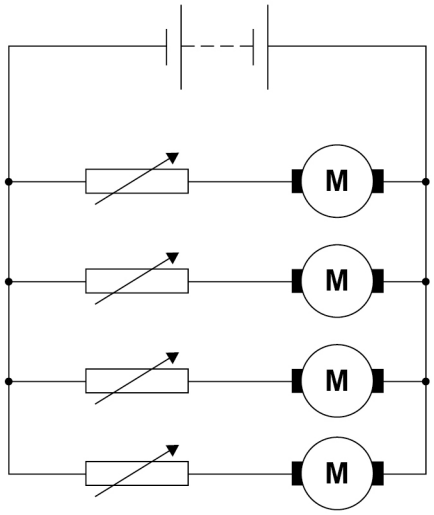


**Question 7 continues on the next page**

Do not write outside the box

**0 7 . 2** Show that $F$ is approximately $4\ \mathrm{N}$ when the drone is hovering.

**[1 mark]**

**0 7 . 3** Determine the **total** power delivered by the battery when the drone is hovering. Assume that the internal resistance of the battery is negligible.

**[3 marks]**

total power = _____ W

**0 7 . 4** Explain how **Figure 13** shows that the internal resistance of the battery must be small.

**[2 marks]**

_____

_____

_____

_____

Do not write outside the box

**0 7 . 5** The drone operator now makes the drone climb through a height change of 200 m.

Calculate, using data from **Figure 13**, the minimum time required for this height change.

**[4 marks]**

minimum time = _____ s

**Question 7 continues on the next page**

Do not write outside the box

**0 7 . 6** The operator makes the drone hover at its new height.
**Figure 15** shows the variation of $F$ with the rotational speed of one propeller.

**Figure 15**

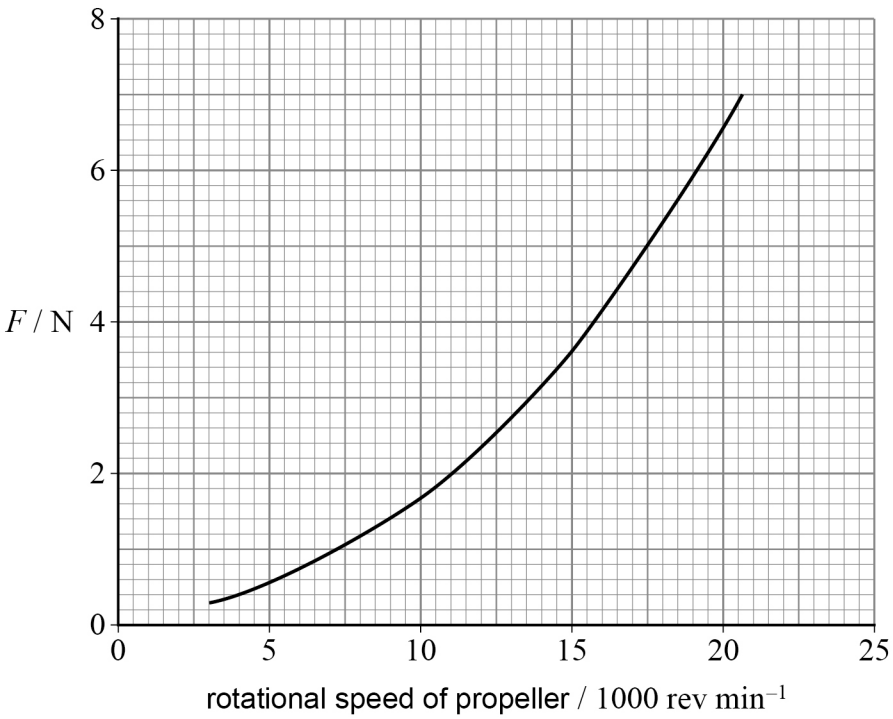


Calculate, in rad $s^{-1}$, the angular speed of a propeller when the drone is hovering.

**[2 marks]**

angular speed of propeller = _____ rad $s^{-1}$

Do not write outside the box

**0 7 . 7** The drone operator wants to rotate the drone about its vertical axis. To do this, the angular speeds of propellers **P** and **R** are decreased by $100\ \text{rad s}^{-1}$ and the angular speeds of propellers **Q** and **S** are increased by $100\ \text{rad s}^{-1}$.

Calculate the angular speed gained by the drone.

moment of inertia of the drone $= 0.021\ \text{kg m}^2$
moment of inertia of a propeller $= 4.8 \times 10^{-5}\ \text{kg m}^2$

**[2 marks]**

angular speed = _____ $\text{rad s}^{-1}$

**0 7 . 8** On another occasion, when the drone is hovering, the drone operator angles one motor-propeller unit to the left as shown in **Figure 16**.

**Figure 16**

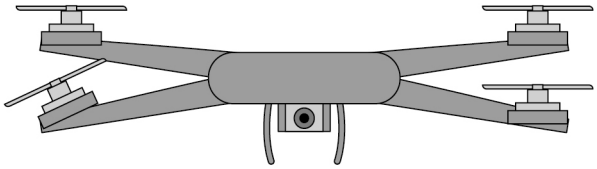

Discuss how the change in angle of the motor-propeller unit will affect the motion of the drone.

**[2 marks]**

_____

_____

_____

_____

18

**END OF QUESTIONS**

Do not write outside the box

**There are no questions printed on this page**

**DO NOT WRITE ON THIS PAGE**
**ANSWER IN THE SPACES PROVIDED**

*Do not write outside the box*

| Question number | **Additional page, if required.**<br>**Write the question numbers in the left-hand margin.** |
|---|---|
| | |

*Do not write outside the box*

| Question number | **Additional page, if required.**<br>**Write the question numbers in the left-hand margin.** |
|---|---|
| | |

**Copyright information**

For confidentiality purposes, all acknowledgements of third-party copyright material are published in a separate booklet. This booklet is published after each live examination series and is available for free download from www.oxfordaqaexams.org.uk.

Permission to reproduce all copyright material has been applied for. In some cases, efforts to contact copyright-holders may have been unsuccessful and Oxford International AQA Examinations will be happy to rectify any omissions of acknowledgements. If you have any queries please contact the Copyright Team.

Copyright © 2021 Oxford International AQA Examinations and its licensors. All rights reserved.