OXFORD

INTERNATIONAL
AQA EXAMINATIONS

Please write clearly in block capitals.

Centre number | | | | | | Candidate number | | | | |

Surname _____

Forename(s) _____

Candidate signature _____
I declare this is my own work.

INTERNATIONAL A-LEVEL
PHYSICS

Unit 5 Physics in practice

Thursday 23 January 2020 07:00 GMT Time allowed: 2 hours

Materials
For this paper you must have:
- a Data and Formulae Booklet as a loose insert
- a ruler with millimetre measurements
- a scientific calculator, which you are expected to use where appropriate.

Instructions
- Use black ink or black ball-point pen.
- Fill in the boxes at the top of this page.
- Answer **all** questions.
- You must answer the questions in the spaces provided. Do not write outside the box around each page or on blank pages.
- If you need extra space for your answer(s), use the lined pages at the end of this book. Write the question number against your answer(s).
- All working must be shown.
- Do all rough work in this book. Cross through any work you do not want to be marked.

Information
- The marks for questions are shown in brackets.
- The maximum mark for this paper is 80.

For Examiner's Use	
Question	Mark
1	
2	
3	
4	
5	
6	
7	
TOTAL	

Do not write outside the box

Section A

Answer **all** questions in this section.

0 1 **Figure 1** shows the apparatus used to investigate the flow of water through a narrow rubber tube.

Figure 1

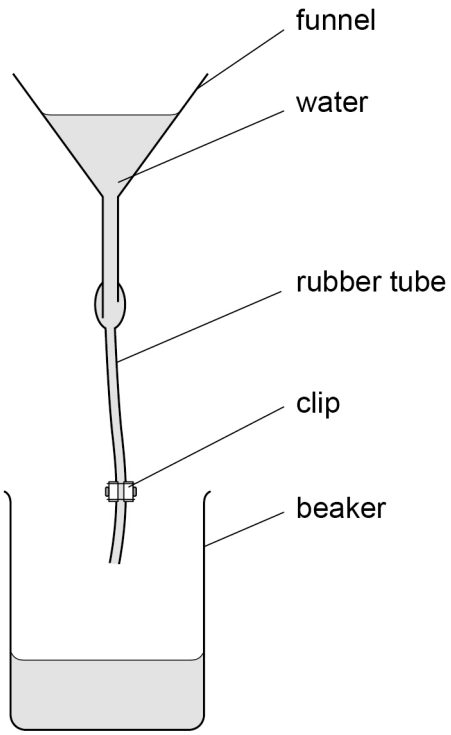

Do not write outside the box

0 1 . 1 The lower end of the rubber tube was closed and a volume $V = 120\ \text{cm}^3$ of water was poured into the funnel.
The tube was opened and a stopwatch was used to measure the time taken for all the water to flow through the tube and into the beaker.
This test was repeated four more times using $V = 120\ \text{cm}^3$ each time.
The results are shown in **Table 1**. None of the results is anomalous.

Table 1

Time of water flow / s	42.05	41.09	43.72	41.84	40.89

Calculate t, the mean value for the time of water flow.

[1 mark]

$t =$ _____ s

0 1 . 2 Calculate the absolute uncertainty in t.

[1 mark]

absolute uncertainty in $t = \pm$ _____ s

Question 1 continues on the next page

Do not write outside the box

0 1 . 3 Suggest **two** possible causes of the uncertainty in t.

[2 marks]

1 _____

_____

_____

2 _____

_____

_____

0 1 . 4 The average rate of flow R through the tube is given by

$$R = \frac{V}{t}$$

Calculate, in $\mathrm{m^3\ s^{-1}}$, the value of R when $V = 120\ \mathrm{cm^3}$.

[1 mark]

R = _____ $\mathrm{m^3\ s^{-1}}$

Do not write outside the box

0 1 . 5 The measuring cylinder used to measure V had a resolution of $\pm 2\ \text{cm}^3$.

Estimate the percentage uncertainty in your value for R in Question **01.4**.

[2 marks]

percentage uncertainty in $R = \pm$ _____

0 1 . 6 State what is meant by the precision of a set of measurements.

[1 mark]

_____

_____

_____

8

Turn over for the next question

Do not write outside the box

0 2 **Figure 2** shows a plot of resistance R against Celsius temperature θ for a thermistor.

Figure 2

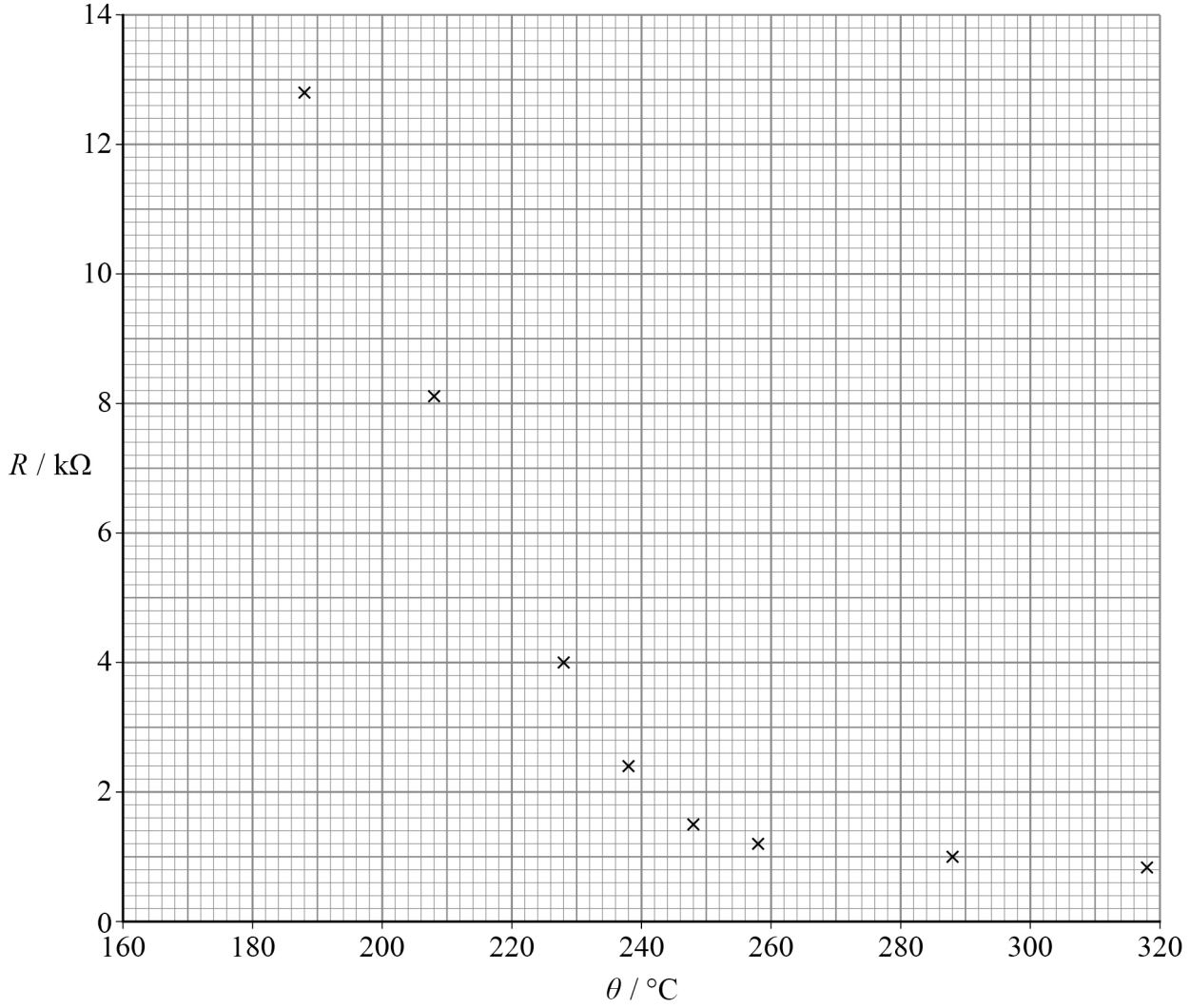

0 2 . 1 Draw, on **Figure 2**, a line of best fit.

[1 mark]

Do not write outside the box

0 2 . 2 For the range of temperatures shown in **Figure 2**,

$$\ln R = \ln A + \frac{B}{2kT}$$

where A and B are constants,
T is the **absolute** temperature
and k is the Boltzmann constant.

Show that $$\ln\left(\frac{R_1}{R_2}\right) = \frac{B}{2k}\left(\frac{1}{T_1} - \frac{1}{T_2}\right)$$

where R_1 and R_2 are the resistances of the thermistor at temperatures T_1 and T_2 respectively.

[2 marks]

0 2 . 3 Determine, using **Figure 2**, a value for T_1 when $R_1 = 10.0\ \text{k}\Omega$ and a value for T_2 when $R_2 = 2.0\ \text{k}\Omega$.

[2 marks]

$T_1 =$ _____ K

$T_2 =$ _____ K

Question 2 continues on the next page

Do not write outside the box

0 2 . 4 Calculate B.
Give your answer to an appropriate number of significant figures.
State the unit for B.

[4 marks]

$B =$ _____

unit for $B =$ _____

9

Do not write outside the box

Turn over for the next question

DO NOT WRITE ON THIS PAGE
ANSWER IN THE SPACES PROVIDED

Do not write outside the box

0 3 **Figure 3** shows an unknown mass M hanging from a bar. The bar has negligible mass.
The bar is freely pivoted at one end and is supported by a vertical spring fixed to point **P**.
The support is adjusted so that the bar is horizontal.

Figure 3

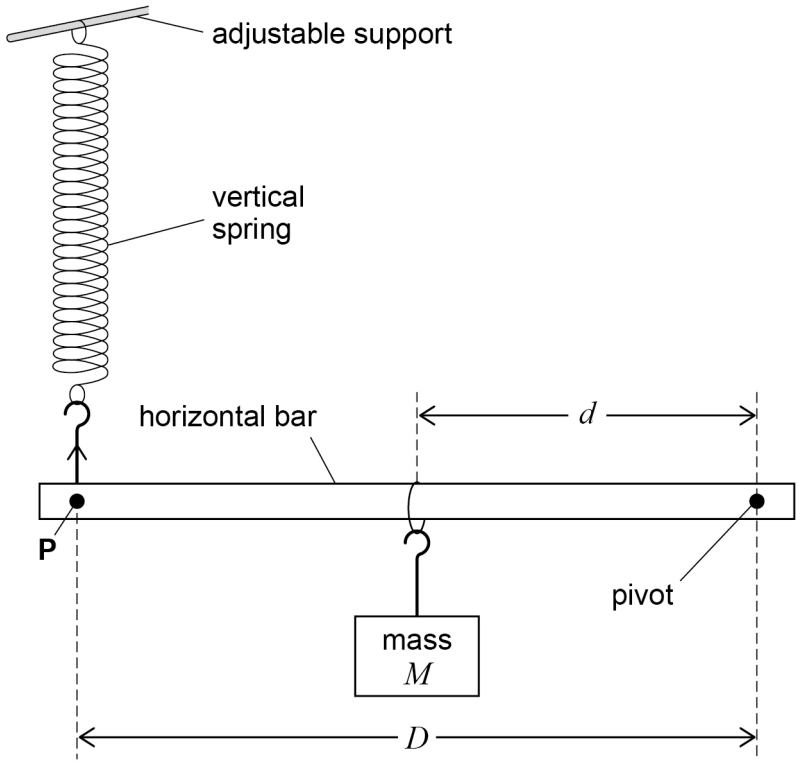

0 3 . 1 The spring obeys Hooke's law and has a stiffness of $25\ \mathrm{N\ m^{-1}}$.
Distances D and d are shown in **Figure 3**.

Show that $$M = \frac{25D\Delta L}{dg}$$

where ΔL is the extension of the spring.

[2 marks]

Do not write outside the box

0 3 . 2 Describe how you would use this apparatus to determine the value of M by a graphical method.

Include in your answer details of:

- additional apparatus
- the measurements made
- details of the procedure
- the graphical determination of M.

[5 marks]

7

Do not write outside the box

0 4 This question is about an experiment to measure the emf ε and internal resistance r of a cell.

Figure 4 shows a length of resistance wire attached to a metre ruler.

The length L of the wire is included in a circuit with the cell and an ammeter.

L is varied by moving a crocodile clip **P** along the wire.

The current I in the circuit is recorded for a range of values of L.

Figure 4

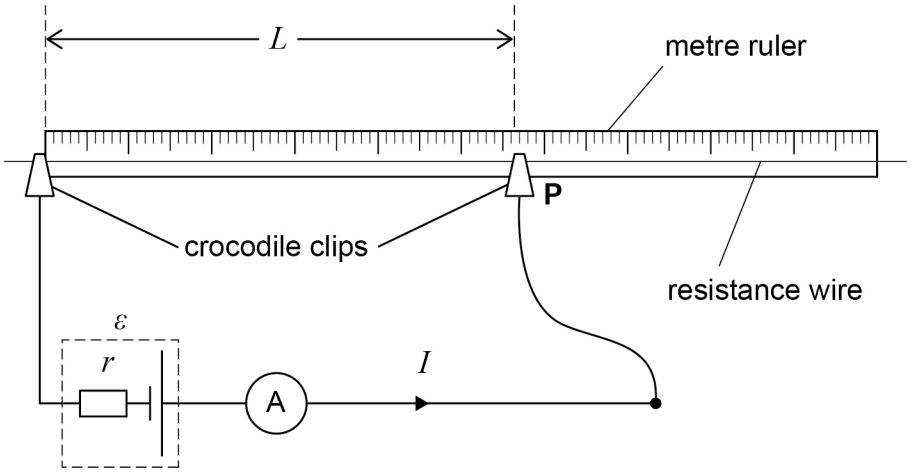

Table 2 shows the results from this experiment.

The third column shows values for $\frac{1}{I}$.

Table 2

L / m	I / A	$\frac{1}{I}$ / A^{-1}
0.50	0.606	1.65
0.58	0.524	1.91
0.65	0.478	2.09
0.72	0.431	2.32
0.78	0.405	2.47
0.85	0.377	2.65

The absolute uncertainty in all measurements of L is ± 1 cm.

Do not write outside the box

0 4 . 1 Draw, on **Figure 5**, a graph of $\frac{1}{I}$ against L, including error bars for the uncertainty in L.
One axis has been completed for you.

[5 marks]

Figure 5

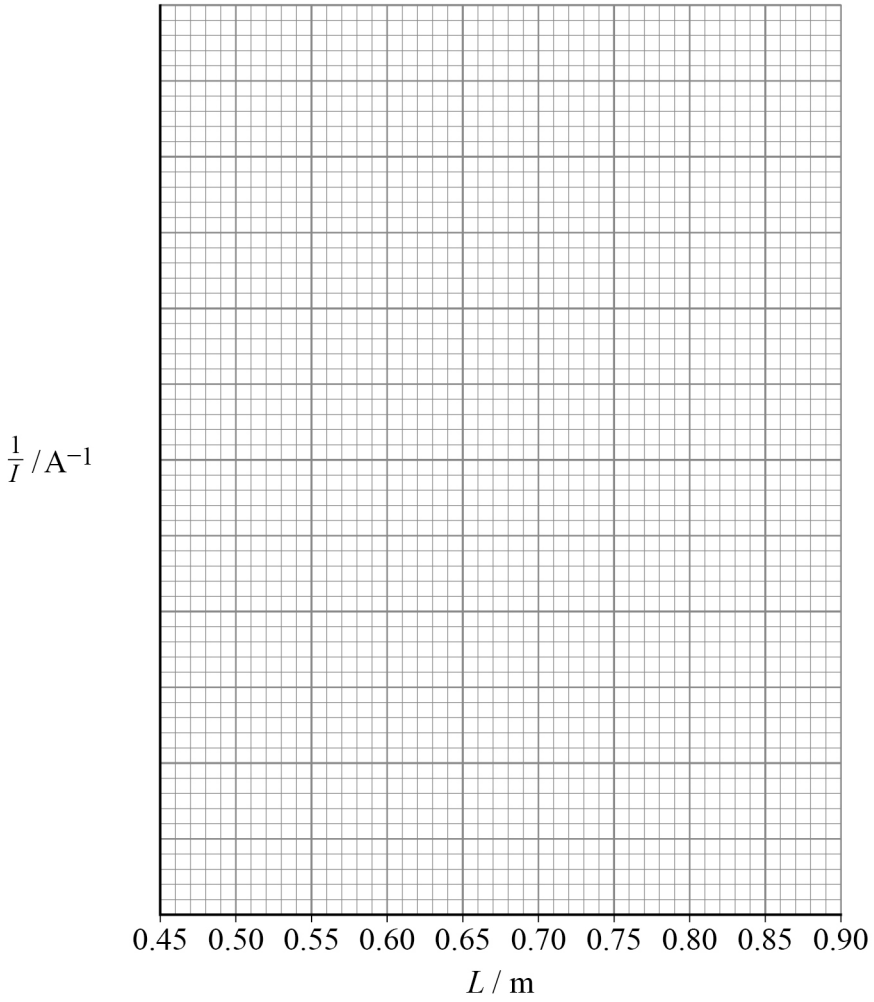

0 4 . 2 Determine the gradient of your best-fit line.

[2 marks]

gradient = _____

Question 4 continues on the next page

Do not write outside the box

0 4 . 3 The relationship between I and L for this wire is given by

$$\frac{1}{I} = \frac{4.80L}{\varepsilon} + \frac{r}{\varepsilon}$$

Determine, using data from the graph, ε and r.

[3 marks]

$\varepsilon =$ _____ V

$r =$ _____ Ω

0 4 . 4 Using values of L greater than $0.50\ \mathrm{m}$ gives more accurate values for ε than using values of L less than $0.50\ \mathrm{m}$.

Suggest **two** reasons why.

[2 marks]

1 _____

_____

_____

2 _____

_____

_____

12

END OF SECTION A

Do not write outside the box

Section B

Answer **all** questions in this section.

0 5 The International Thermonuclear Experimental Reactor (ITER) is an experimental nuclear fusion reactor.

The ITER is designed to create a high-temperature plasma of deuterium $\left({}^{2}_{1}\mathrm{H}\right)$ and tritium $\left({}^{3}_{1}\mathrm{H}\right)$ in its reaction vessel. This leads to the fusion of tritium and deuterium nuclei.

The plasma is contained using strong magnetic fields.

0 5 . 1 Explain why the nuclear fusion reaction can be sustained only when the reactants are at a very high temperature.

[3 marks]

0 5 . 2 The plasma in the ITER has a high pressure as well as a high temperature.

Explain why the kinetic theory of gases cannot be applied to this plasma.

[2 marks]

Question 5 continues on the next page

Do not write outside the box

0 5 . 3 The most common nuclear fusion reaction in the ITER is

$$^{2}_{1}\text{H} + ^{3}_{1}\text{H} \rightarrow ^{4}_{2}\text{He} + ^{1}_{0}\text{n}$$

Table 3 gives the binding energies per nucleon of the nuclei involved.

Table 3

Nucleus	Binding energy per nucleon / MeV
$^{2}_{1}\text{H}$	1.11
$^{3}_{1}\text{H}$	2.83
$^{4}_{2}\text{He}$	7.07

Show that the energy released per fusion in this reaction is approximately 3×10^{-12} J.

[3 marks]

Do not write outside the box

0 5 . 4 The ITER is expected to transfer $500\ \mathrm{MW}$ of power from all of the reactions between nuclei of deuterium and tritium.

Calculate, in $\mathrm{kg\ s^{-1}}$, the mean rate of use of fuel by the ITER.

[3 marks]

mean rate = _____ $\mathrm{kg\ s^{-1}}$

0 5 . 5 The kinetic energy of neutrons leaving the reaction vessel is used to generate electricity.

Suggest why neutrons will leave the reaction vessel but helium ions will not.

[1 mark]

_____

_____

_____

12

Turn over for the next question

Do not write outside the box

0 6 **Figure 6** shows a guitar string fixed at point **Q** and wrapped around a tuning peg **P**. The tension of the string can be adjusted by turning peg **P**.

Figure 6

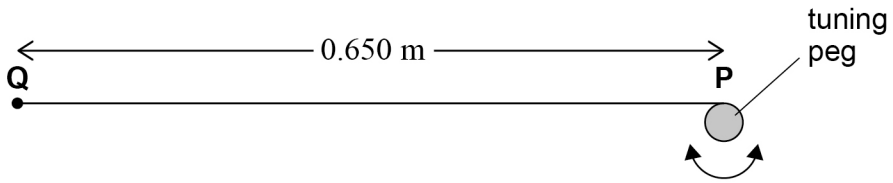

length of **PQ** = 0.650 m
frequency of first harmonic = 330 Hz
mass per unit length of the string = 4.0×10^{-4} kg m^{-1}

0 6 . 1 Show that the tension of the string is approximately 74 N.

[1 mark]

Do not write outside the box

0 6 . 2 When the string is plucked, it is pulled sideways at the centre by a distance of 5.6×10^{-3} m using a force F, as shown in **Figure 7**.

Figure 7

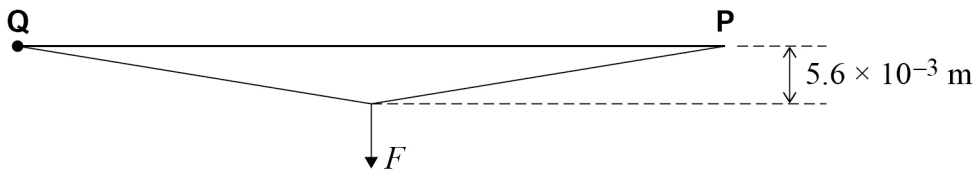

Show that the change in length of the string is approximately 1×10^{-4} m.

[2 marks]

0 6 . 3 When the string is pulled sideways, its tension increases by 1.4 N.

Calculate the Young modulus of the steel from which the string is made.

cross-sectional area of the string = 5.07×10^{-8} m^2

[3 marks]

Young modulus = _____ Pa

Question 6 continues on the next page

Do not write outside the box

0 6 . 4 Show that the additional energy stored in the string when it is pulled sideways is approximately 7.2×10^{-3} J.

[2 marks]

0 6 . 5 The vibrating string behaves as a point source of sound, propagating sound waves in all directions.
The energy stored in the string is dissipated as sound over a period of 8.0 s.
Sound intensity is defined as the wave power per unit area.
Assume that there is no attenuation of the sound wave by the air.

Calculate the mean sound intensity observed at a distance of 3.0 m from the guitar string.

[2 marks]

mean sound intensity = _____ $\mathrm{W\ m^{-2}}$

Do not write outside the box

0 6 . 6 After the string is plucked, it is observed that the tuning peg **P** does not resonate.

Suggest **two** reasons why **P** does not resonate.

[2 marks]

1 _____

_____

_____

2 _____

_____

_____

12

Turn over for the next question

Do not write outside the box

0 7 An automatic belay system (ABS) is a device used in climbing. The ABS makes sure that a climber is lowered safely to the ground if he falls.
Figure 8 shows a climber attached to an ABS during his climb.

Figure 8

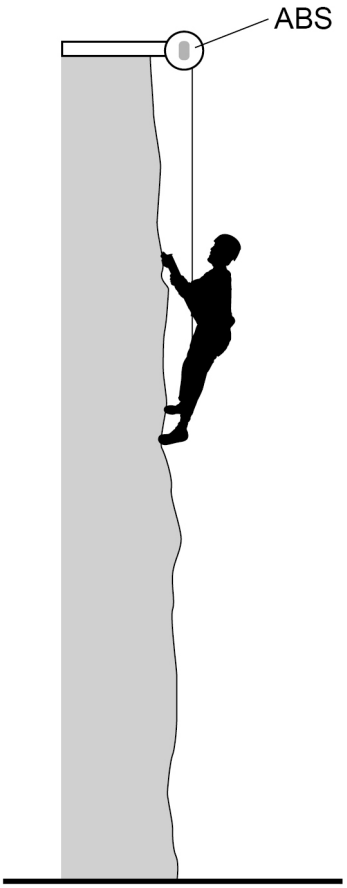

Do not write outside the box

Figure 9 shows one type of ABS. The climbing rope is attached to the climber and to the axle of the ABS. As the climber moves upwards, the rope wraps around the axle. The thickness of the rope is negligible compared with the diameter of the axle.

Figure 9

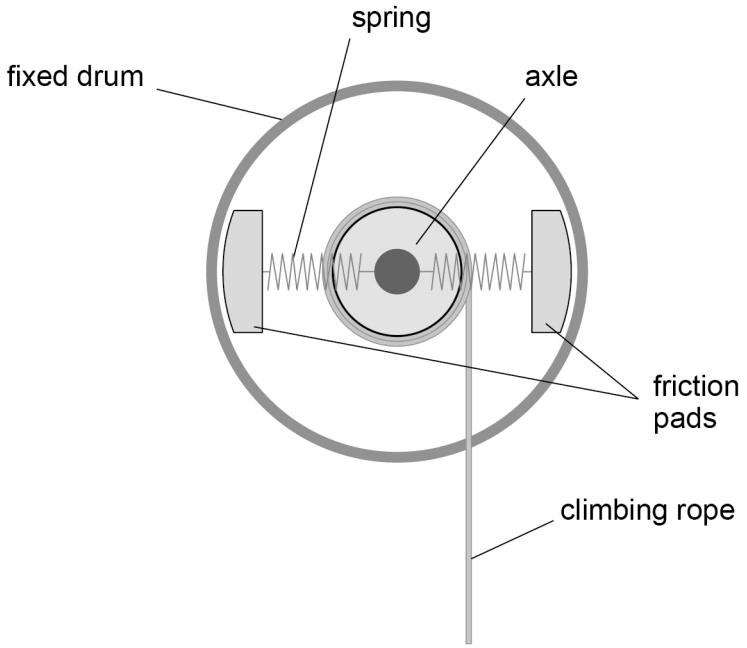

If the climber falls, the rope turns the axle and friction pads clockwise and the friction pads move outwards until they rub on the fixed drum.
The friction between the pads and the fixed drum slows the climber's descent.

0 7 . 1 The ABS has an axle of diameter $8.9\ \text{cm}$.
The climber falls and the ABS lets him descend at a constant speed of $2.9\ \text{m s}^{-1}$.

Show that the axle rotates at an angular speed of approximately $65\ \text{rad s}^{-1}$.

[2 marks]

Question 7 continues on the next page

Do not write outside the box

0 7 . 2 **Figure 10** shows the friction pads rubbing on the fixed drum as the climber descends at a constant speed.

Figure 10

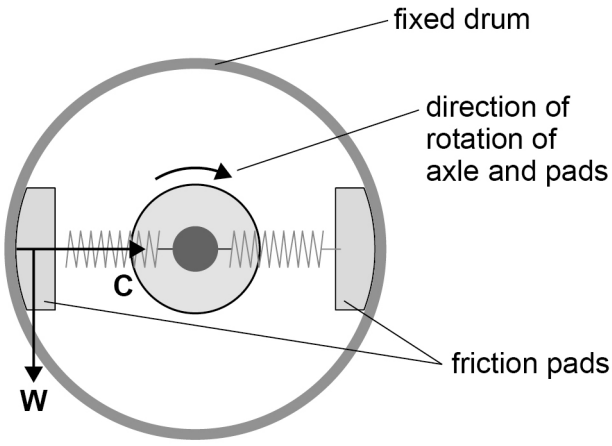

C is the normal contact force between the friction pad and the fixed drum.
W is the weight of the friction pad.
C and **W** are shown on **Figure 10**.

Draw **two** more arrows on the friction pad in **Figure 10** to indicate the other two forces acting on the pad.
Label the forces.

[2 marks]

Do not write outside the box

0 7 . 3 When the axle is rotating at $65\ \text{rad s}^{-1}$ the extension in the springs is $8.0\ \text{mm}$. The normal contact force exerted by the drum on each friction pad is $360\ \text{N}$.

Each friction pad has a mass of $0.75\ \text{kg}$. The centre of mass of each friction pad is $12\ \text{cm}$ from the centre of the axle when the friction pad is rubbing on the fixed drum.

By considering the centripetal force on a friction pad, calculate the spring constant of the spring.

[4 marks]

spring constant = _____ N m^{-1}

Question 7 continues on the next page

Do not write outside the box

0 7 . 4 The frictional forces between the friction pads and the fixed drum let the climber descend at a slow constant speed.
The average frictional force on each pad is 140 N. The internal radius of the fixed drum is 13 cm.
The diameter of the axle is 8.9 cm.
The weight of the rope is negligible.

Calculate the tension in the rope attached to the climber.

[2 marks]

tension = _____ N

0 7 . 5 State the magnitude of the weight of the climber and explain your answer.

[2 marks]

weight = _____ N

_____

_____

_____

_____

Do not write outside the box

0 7 . 6 **Figure 11** shows a magnetic type of ABS.

Figure 11

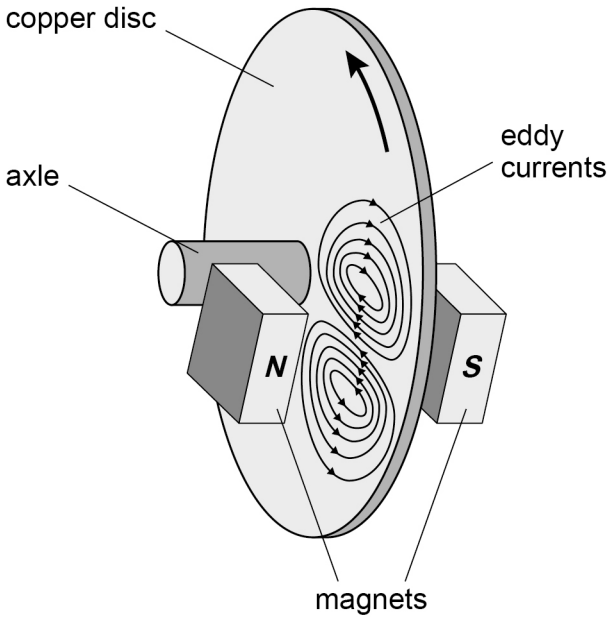

In a magnetic ABS the axle is attached to a copper disc positioned between two strong magnets. When the climber falls, the axle makes the disc spin, leading to eddy currents in the disc.

Explain how the eddy currents are formed and how this process lets the climber descend at a slow constant speed.

[3 marks]

Question 7 continues on the next page

Do not write outside the box

0 7 . 7 A second climber of mass $65\ \mathrm{kg}$ descends from rest through a distance of $8.0\ \mathrm{m}$ and is travelling at $2.5\ \mathrm{m\ s^{-1}}$ at the end of the descent.
The copper disc has a mass of $0.62\ \mathrm{kg}$ and a specific heat capacity of $385\ \mathrm{J\ kg^{-1}\ K^{-1}}$.
The rotational kinetic energy of the copper disc is negligible.

Calculate the maximum possible increase in temperature of the copper disc due to the energy lost by the climber during his descent.

[5 marks]

increase in temperature = _____ K

20

END OF QUESTIONS

Do not write outside the box

There are no questions printed on this page

DO NOT WRITE ON THIS PAGE
ANSWER IN THE SPACES PROVIDED

Do not write outside the box

Question number	**Additional page, if required.** **Write the question numbers in the left-hand margin.**

Do not write outside the box

Question number	**Additional page, if required.** **Write the question numbers in the left-hand margin.**

Do not write outside the box

Question number	**Additional page, if required.** **Write the question numbers in the left-hand margin.**

Copyright information

For confidentiality purposes, all acknowledgements of third-party copyright material are published in a separate booklet. This booklet is published after each live examination series and is available for free download from www.oxfordaqaexams.org.uk.

Permission to reproduce all copyright material has been applied for. In some cases, efforts to contact copyright-holders may have been unsuccessful and Oxford International AQA Examinations will be happy to rectify any omissions of acknowledgements. If you have any queries please contact the Copyright Team.

Copyright © 2020 Oxford International AQA Examinations and its licensors. All rights reserved.