OXFORD
INTERNATIONAL
AQA EXAMINATIONS

Please write clearly in block capitals.

Centre number | | | | | | Candidate number | | | | |

Surname _____

Forename(s) _____

Candidate signature _____

INTERNATIONAL A-LEVEL
PHYSICS

Unit 3 Fields and their consequences

Monday 21 January 2019 07:00 GMT Time allowed: 2 hours

Materials
For this paper you must have:
- a Data and Formulae Booklet as a loose insert
- a ruler with millimetre measurements
- a scientific calculator, which you are expected to use where appropriate.

Instructions
- Use black ink or black ball-point pen.
- Fill in the boxes at the top of this page.
- Answer **all** questions.
- You must answer the questions in the spaces provided. Do not write outside the box around each page or on blank pages.
- If you need extra space for your answer(s), use the lined pages at the end of this book. Write the question number against your answer(s).
- All working must be shown.
- Do all rough work in this book. Cross through any work you do not want to be marked.

Information
- The marks for questions are shown in brackets.
- The maximum mark for this paper is 80.

For Examiner's Use	
Question	Mark
1	
2	
3	
4	
5	
6–35	
TOTAL	

Do not write outside the box

Section A

Answer **all** questions in this section.

0 1 **Figure 1** shows a fairground ride on which riders perform horizontal circles about the centre of the ride. Each seat is attached to the top of the ride with a chain of negligible mass. Two seats, **A** and **B**, are connected to the ride at different distances from the vertical axis.
The chain of seat **A** makes an angle θ to the vertical. When the ride is rotating at its maximum angular velocity ω_{max}, θ is $35°$.

Figure 1

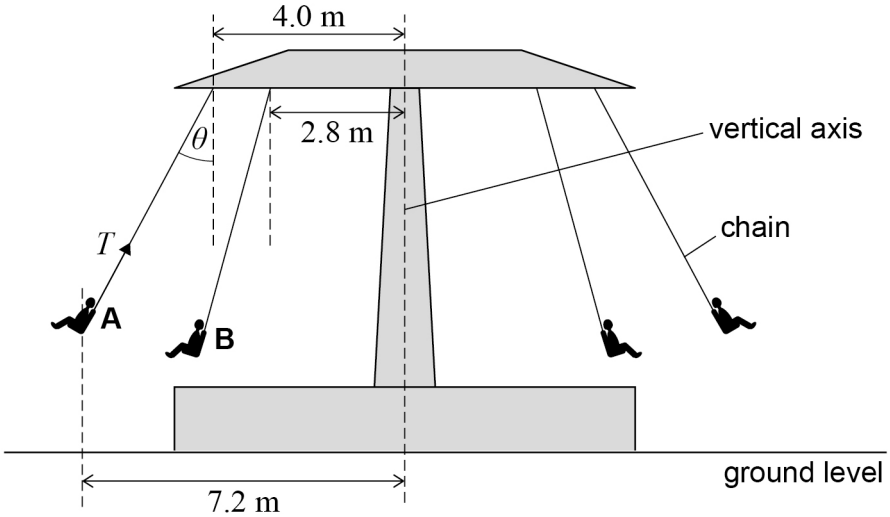

0 1 . 1 The centripetal force acting on a rider in seat **A** at ω_{max} is F_{max}.

State an expression for F_{max} in terms of T and θ.

[1 mark]

F_{max} = _____

Do not write outside the box

0 1 . 2 The tension T in the chain of **A** is $950\ \mathrm{N}$ when the ride is rotating at ω_{max}.

Calculate the total mass of the rider and seat **A**.

[2 marks]

total mass = _____ kg

0 1 . 3 r is the radius of the circular path of seat **A**.

Show that $\omega_{max} = 0.84\sqrt{\frac{g}{r}}$

[3 marks]

0 1 . 4 The centre of mass of the rider and seat **A** is $7.2\ \mathrm{m}$ from the vertical axis of the ride.

Calculate the time for one revolution of the ride when θ is $35°$.

[2 marks]

time for one revolution = _____ s

Question 1 continues on the next page

Do not write outside the box

0 1 . 5 **Figure 2** shows the angle θ_B that the chain of seat **B** makes to the vertical when the ride is rotating at ω_{max}.

Figure 2

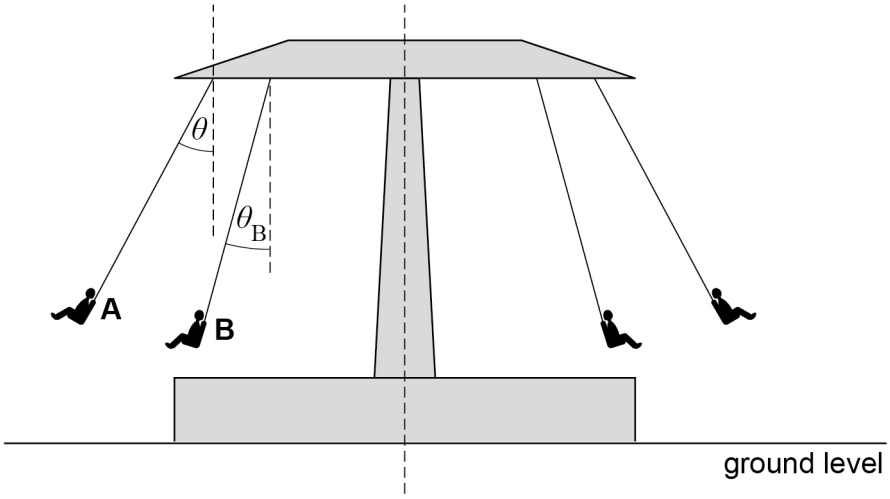

Explain why θ_B will be less than θ when the ride is rotating at ω_{max}.

[2 marks]

10

Do not write outside the box

Turn over for the next question

DO NOT WRITE ON THIS PAGE
ANSWER IN THE SPACES PROVIDED

Do not write outside the box

0 2 **Figure 3** shows a circuit used to provide an output voltage V_{out}.
The capacitor **C** has a capacitance of $2200\ \mu F$ and is initially uncharged. The battery has an emf E of $6.0\ V$ and a negligible internal resistance.

Switch **S** is closed. The current in resistor $\mathbf{R_1}$ is I.

Figure 3

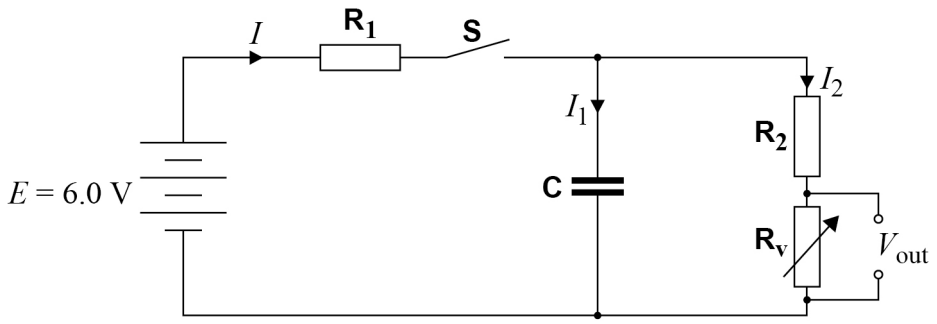

Figure 4 shows the variation of I with time t after switch **S** is closed.

Figure 4

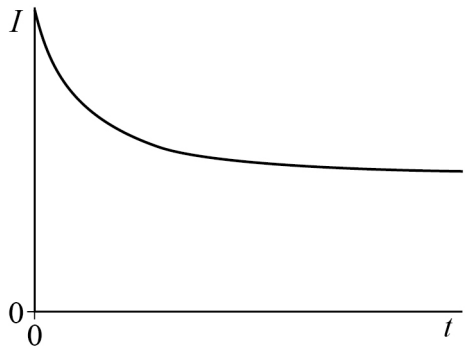

0 2 . 1 I_1 is the current in **C** and I_2 is the current in resistors $\mathbf{R_2}$ and $\mathbf{R_v}$.

Explain why I varies as shown in **Figure 4**.

[3 marks]

Do not write outside the box

0 2 . 2 The variable resistor $\mathbf{R_v}$ is set to a resistance of $4.0\ \mathrm{k\Omega}$. $\mathbf{R_2}$ has a resistance of $2.0\ \mathrm{k\Omega}$. The capacitor is fully charged and then switch **S** is opened, causing V_{out} to decrease.

Show that the potential difference across **C** is approximately $1\ \mathrm{V}$ when V_{out} is $0.70\ \mathrm{V}$.

[2 marks]

0 2 . 3 Calculate the time T after switch **S** is opened for V_{out} to decrease to $0.70\ \mathrm{V}$.

[4 marks]

time = _____ s

0 2 . 4 The resistance of $\mathbf{R_v}$ can be increased or decreased.
C is fully charged again before switch **S** is opened.

Explain how the adjustment of $\mathbf{R_v}$ can be used to increase T.

[2 marks]

_____

_____

_____

_____

_____

11

Turn over ►

Do not write outside the box

0 3 A low voltage supply is needed for a battery charger.
An engineer designs a transformer to convert an alternating input voltage of $230\ V_{rms}$ to the low voltage needed for the battery charger.
The transformer has 800 turns on the primary coil and 28 turns on the secondary coil.

0 3 . 1 Calculate V_s the rms output voltage from the secondary coil.
For this calculation, assume that the transformer is ideal.

[2 marks]

V_s = _____ V

0 3 . 2 The frequency of the input voltage is $50\ Hz$.

Sketch on the axes below a graph of the variation of the output voltage with time t.
The graph should show the voltage variation over a period of $50\ ms$.
Add an appropriate scale to the voltage axis.

[4 marks]

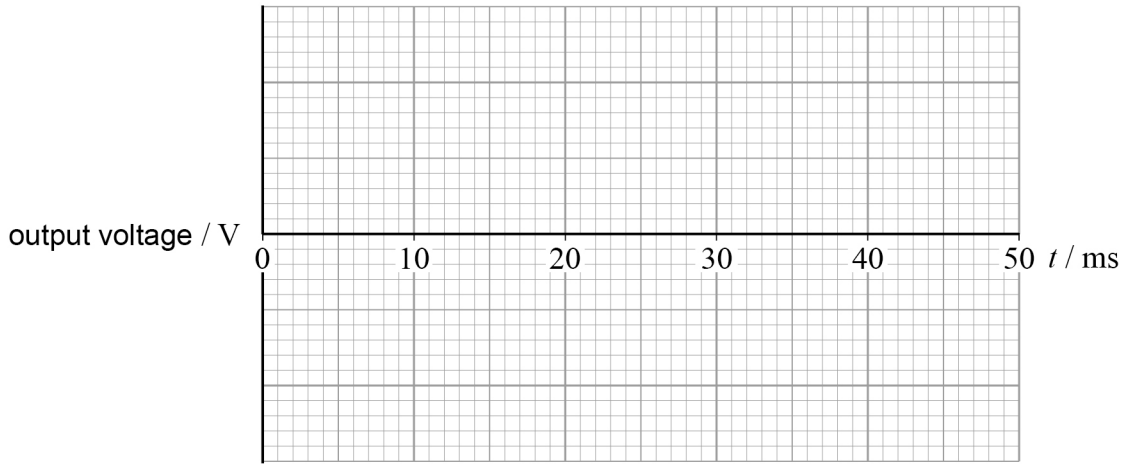

Do not write outside the box

0 3 . 3 In practice, the transformer is 90% efficient. The rms current in the secondary coil is 2.4 A.

Calculate in mA the rms current in the primary coil of the transformer.

[2 marks]

rms current = _____ mA

0 3 . 4 The engineer now connects the output of the transformer in series with a semiconductor diode and the battery charger.

Figure 5 shows the circuit. The battery charger behaves as an ohmic conductor.

Figure 5

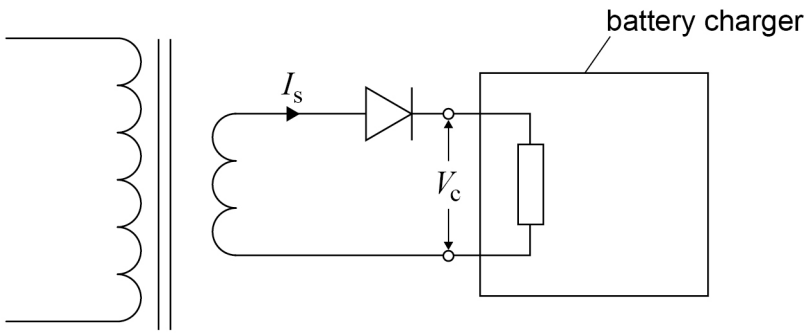

Deduce how the magnitude and waveform of the voltage V_c across the battery charger are different from the magnitude and waveform of the output from the transformer.

[2 marks]

magnitude _____

_____

_____

waveform _____

_____

_____

Question 3 continues on the next page

Do not write outside the box

0 3 . 5 One inefficiency of the transformer arises from eddy current losses.

Explain how eddy current losses occur in a transformer and go on to suggest how good transformer design minimises eddy current losses.

[4 marks]

14

Do not write outside the box

0 4 **Figure 6** shows an isolated spherical oil drop carrying a charge of $+6.4 \times 10^{-19}$ C. Assume that the oil drop behaves as a charged, conducting sphere.

Figure 6

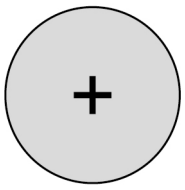

0 4 . 1 Draw electric field lines onto **Figure 6** to show the electric field around the oil drop.

[1 mark]

0 4 . 2 Define the absolute electrical potential at a point in an electric field.

[1 mark]

_____

_____

_____

0 4 . 3 The oil drop has a radius of 1.4×10^{-6} m.

Calculate the absolute electric potential at the surface of the oil drop.

[2 marks]

absolute electric potential = _____ V

Question 4 continues on the next page

Do not write outside the box

0 4 . 4 **Figure 7** shows the charged oil drop stationary in air in an electric field between two parallel plates. The potential difference between the plates is V.

Draw and label arrows on **Figure 7** to represent the forces acting on the oil drop.

[1 mark]

Figure 7

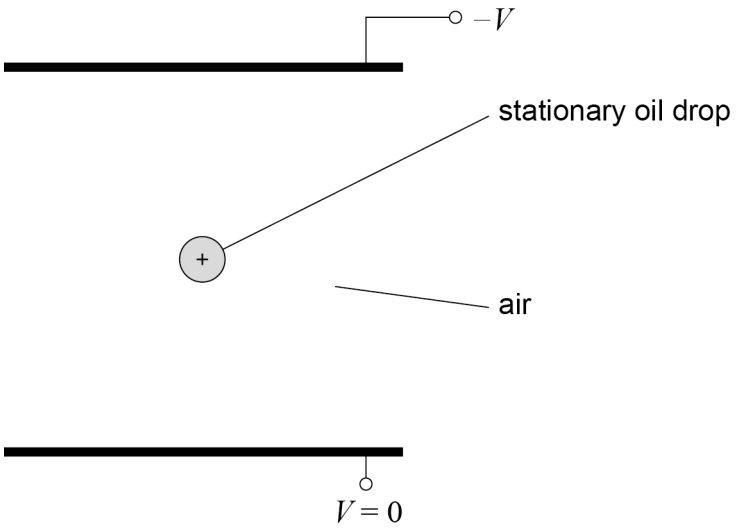

0 4 . 5 The potential difference between the plates is now reversed so that the oil drop is attracted towards the lower plate.

Explain why the initial acceleration of the oil drop is approximately $20\ \mathrm{m\ s^{-2}}$.

[2 marks]

Do not write outside the box

0 4 . 6 Describe and explain the motion of the oil drop after the potential difference between the plates is reversed.

[2 marks]

_____

_____

_____

_____

_____

_____

9

Turn over for the next question

Do not write outside the box

0 5 A charged particle enters a region of uniform magnetic flux density B. The particle enters at right angles to the magnetic field.

0 5 . 1 Show that the radius of curvature r of the particle in the magnetic field is:

$$r = \frac{1}{Bq}\sqrt{2E_k m}$$

where q = the charge on the particle
E_k = the kinetic energy of the particle
m = the mass of the particle.

[3 marks]

Do not write outside the box

0 5 . 2 A stream of alpha particles and a stream of beta particles both enter a uniform magnetic field at right angles to the field direction.

The alpha particles each have a kinetic energy of $7.4\ \text{MeV}$.
The beta particles each have a kinetic energy of $1.1\ \text{MeV}$.
The radius of the track of the alpha particles is r_α and the radius of the track of the beta particles is r_β
The two streams of particles do not interact and relativistic effects may be ignored.

Calculate $\dfrac{r_\alpha}{r_\beta}$

mass of an alpha particle = $6.64 \times 10^{-27}\ \text{kg}$

[3 marks]

$\dfrac{r_\alpha}{r_\beta}$ = _____

6

END OF SECTION A

Do not write outside the box

Section B

Each of the questions in this section is followed by four responses, **A**, **B**, **C** and **D**.

For each question select the best response.

Only **one** answer per question is allowed.
For each answer completely fill in the circle alongside the appropriate answer.

CORRECT METHOD ⬬ WRONG METHODS

If you want to change your answer you must cross out your original answer as shown.

If you wish to return to an answer previously crossed out, ring the answer you now wish to select as shown.

You may do your working in the blank space around each question but this will not be marked. Do **not** use additional sheets for this working.

0 6 The mean radius of the Earth's orbit around the Sun is 1.5×10^8 km.

What is the mean centripetal acceleration of the Earth about the Sun?

1 year = 3.15×10^7 s

[1 mark]

A 6.0×10^{-6} rad s^{-2}

B 6.0×10^{-3} rad s^{-2}

C 3.0×10^{1} rad s^{-2}

D 6.0×10^{4} rad s^{-2}

Do not write outside the box

0 7 The graph shows the variation of displacement x with time t for an object performing simple harmonic motion. T is the period of the oscillation.

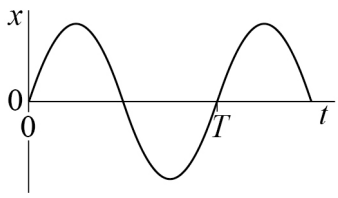

Which graph shows the variation of acceleration a with time t for the same object?

[1 mark]

A

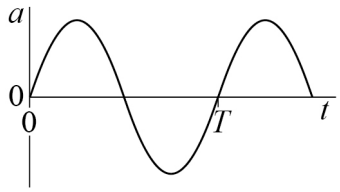

B

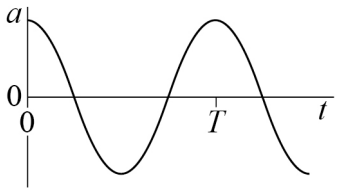

C

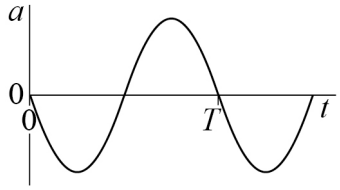

D

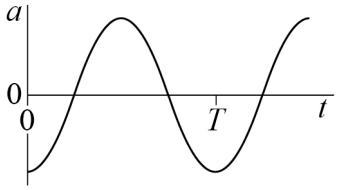

A ⬭

B ⬭

C ⬭

D ⬭

Turn over for the next question

Do not write outside the box

0 8 The graph shows the variation of the velocity v with time t for an object performing simple harmonic motion. The period of the oscillation is T.

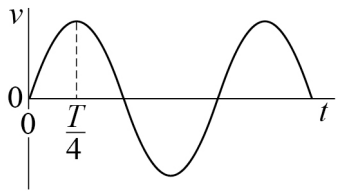

The maximum acceleration of the object is equivalent to the:

[1 mark]

A gradient of the graph when $t = 0$

B gradient of the graph when $t = \frac{T}{4}$

C area between the graph and the t axis between $t = 0$ and $t = \frac{T}{4}$

D area between the graph and the t axis between $t = 0$ and $t = \frac{T}{2}$

0 9 The total energy of an object that is performing simple harmonic motion is:

[1 mark]

A always zero.

B a maximum when the object is at maximum speed.

C a maximum when the object is at maximum displacement from the equilibrium position.

D constant throughout a complete cycle.

Do not write outside the box

1 0 In the diagram, each mass m is identical and each spring is identical.
The masses are displaced vertically from their rest position and released.

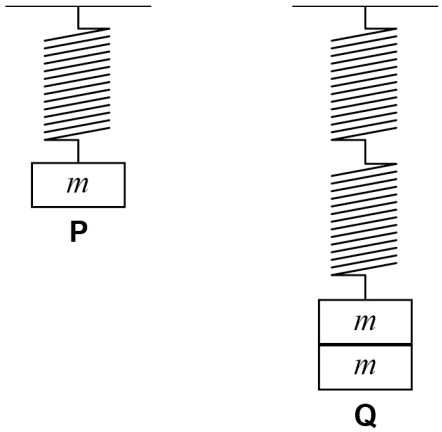

What is the ratio $\dfrac{\text{period of oscillation of } \mathbf{P}}{\text{period of oscillation of } \mathbf{Q}}$?

[1 mark]

A $\frac{1}{4}$ ⬭

B $\frac{1}{2}$ ⬭

C 1 ⬭

D 2 ⬭

Turn over for the next question

Do not write outside the box

1 1 The graph shows the variation of displacement x with time t for an object performing simple harmonic motion. Point **P** has a displacement of $2\ \text{cm}$ from the equilibrium position.

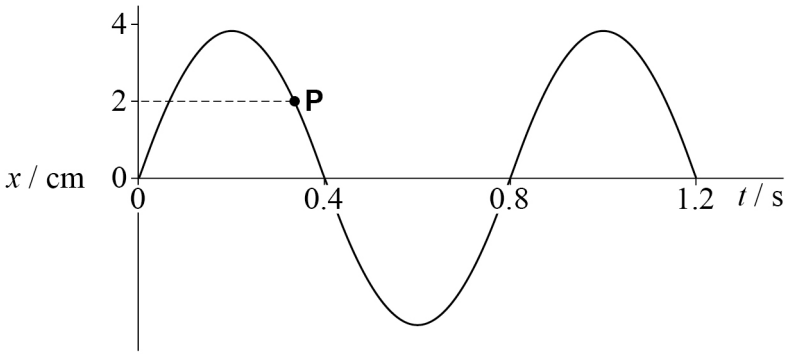

What is the velocity of the object at point **P**?

[1 mark]

A $11\ \text{cm s}^{-1}$

B $18\ \text{cm s}^{-1}$

C $27\ \text{cm s}^{-1}$

D $94\ \text{cm s}^{-1}$

1 2 What is a unit for G, the gravitational constant?

[1 mark]

A $\text{kg m}^3\ \text{s}^{-2}$

B $\text{kg}^{-1}\ \text{m}^3\ \text{s}^2$

C $\text{J m}^{-1}\ \text{kg}^2$

D J m kg^{-2}

Do not write outside the box

1 3 The diameter of the Earth is 3 times the diameter of planet **P**.
The mass of the Earth is 18 times the mass of **P**.
The acceleration due to gravity at the surface of the Earth is g.

What is the acceleration due to gravity at the surface of **P**?

[1 mark]

A $\frac{g}{6}$ ⬭

B $\frac{g}{2}$ ⬭

C $2g$ ⬭

D $6g$ ⬭

Turn over for the next question

Do not write outside the box

1 4 The diagram shows the distance D between the surface of the Earth and the surface of the Moon.

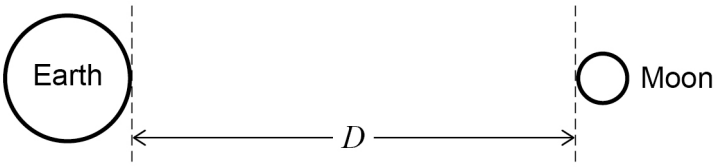

Which graph shows the variation with distance from the Earth's surface of the gravitational potential V in the Earth–Moon gravity field?

[1 mark]

A

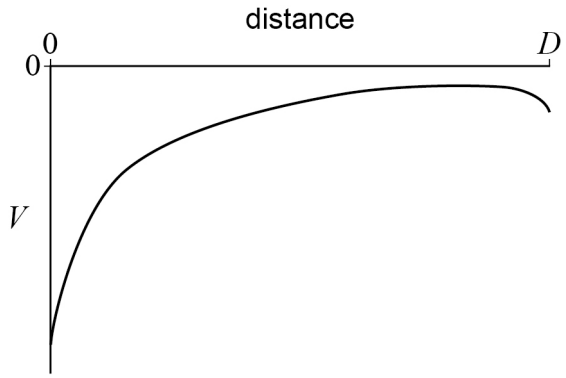

B

C

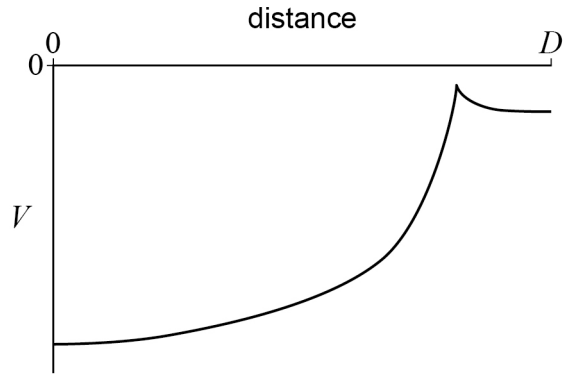

D

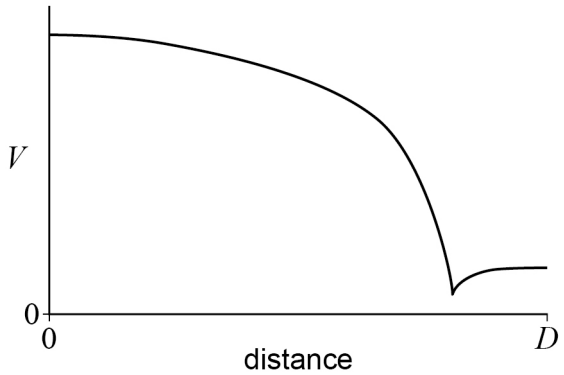

A ⬭

B ⬭

C ⬭

D ⬭

Do not write outside the box

1 5 Which statement about gravitational field lines is **not** correct?

[1 mark]

A The arrows on them indicate the direction of the force that would act on a point mass at that position. ⬭

B The gravitational field lines around the Earth are directed radially away from the Earth. ⬭

C The separation of gravitational field lines is an indication of the gravitational field strength at that position. ⬭

D They always intersect with the lines of equipotential at an angle of $90°$. ⬭

1 6 Satellites **P** and **Q** orbit the Earth.

For **P**, the height of the orbit above the surface of the Earth is equal to the radius of the Earth.
For **Q**, the height of the orbit above the surface of the Earth is equal to $3 \times$ the radius of the Earth.
The mass of **Q** is $3 \times$ the mass of **P**.
P experiences a gravitational attraction of $600\ \mathrm{N}$ towards the Earth.

What is the gravitational attraction experienced by **Q**?

[1 mark]

A $150\ \mathrm{N}$ ⬭

B $200\ \mathrm{N}$ ⬭

C $450\ \mathrm{N}$ ⬭

D $900\ \mathrm{N}$ ⬭

Turn over for the next question

Do not write outside the box

1 7 An orbiting satellite is moved to an orbit of smaller radius, causing its gravitational potential energy to decrease.

Which row shows the changes in the magnitudes of the kinetic energy and the total energy of the satellite?

[1 mark]

	Change in kinetic energy	Change in total energy	
A	Decrease	Decrease	⬭
B	Increase	Decrease	⬭
C	Increase	No change	⬭
D	Increase	Increase	⬭

1 8 Many satellites in geosynchronous orbits are also geostationary.

Which is a correct statement about geostationary orbits?

[1 mark]

A They are polar orbits. ⬭

B Their periodic time is less than one day. ⬭

C They orbit in the plane of the Equator and in the opposite direction as the Earth's rotation. ⬭

D They orbit in the plane of the Equator and in the same direction as the Earth's rotation. ⬭

1 9 What is a unit for the permittivity of free space, ε_0?

[1 mark]

A $A^2\,kg^{-1}\,m^{-3}\,s^{+4}$ ⬭

B $A^2\,kg^{-2}\,m^{-3}\,s^{-4}$ ⬭

C $A^2\,kg^{-1}\,m^{-1}\,s^{+4}$ ⬭

D $A^2\,kg^{-1}\,m^{-3}\,s^{-2}$ ⬭

Do not write outside the box

2 0 Two charges $+Q$ and $-Q$ are equal in magnitude and opposite in sign.
P is a distance r from each of the charges.

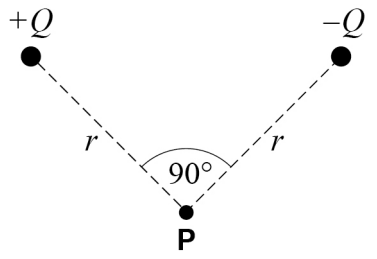

Which row shows the magnitude and direction of the electric field strength at **P** due to the two charges?

[1 mark]

	Magnitude of electric field strength	Direction of electric field strength
A	$\frac{Q}{2\sqrt{2}\pi\varepsilon_0 r^2}$	To right
B	$\frac{Q}{2\sqrt{2}\pi\varepsilon_0 r^2}$	To left
C	$\frac{Q^2}{8\pi\varepsilon_0 r^4}$	To right
D	$\frac{Q^2}{8\pi\varepsilon_0 r^4}$	To left

Turn over for the next question

Do not write outside the box

2 1 The diagram shows two parallel, conducting plates and a graph of the variation of potential between the plates.

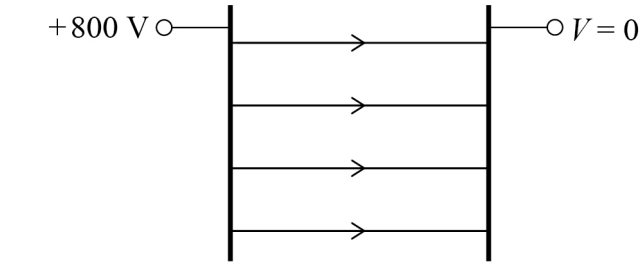

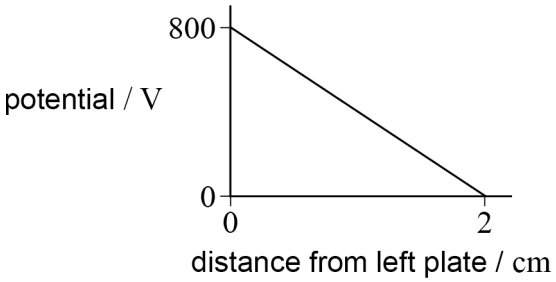

What is the magnitude of the electric field strength between the plates?

[1 mark]

A 400 N C^{-1}

B 800 N C^{-1}

C 1600 N C^{-1}

D 40 000 N C^{-1}

Do not write outside the box

2 2 The diagram shows two horizontal plates with an electric field between them.
A charged particle enters at right angles to the field. The force due to the electric field is the only force acting on the particle.

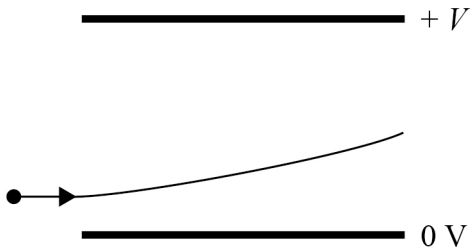

Which change increases the vertical velocity of the particle as it leaves the electric field?

[1 mark]

A Decreasing the length of the plates. ⬭

B Increasing the separation of the plates. ⬭

C Decreasing the initial velocity of the particle. ⬭

D Using a particle of greater mass but the same charge. ⬭

Turn over for the next question

Do not write outside the box

2 3 The graph shows the variation in electric field strength E with distance r from the centre of a charged body.

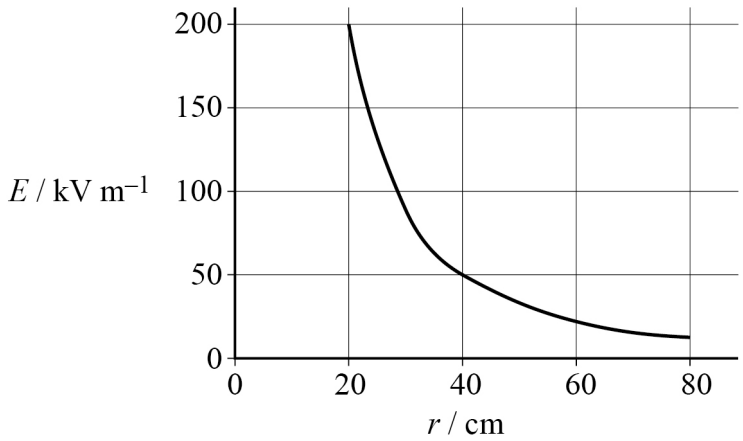

What is the potential difference between a point where $r = 20$ cm and a point where $r = 40$ cm?

[1 mark]

A 2000 V

B 20 000 V

C 7500 V

D 750 000 V

Do not write outside the box

2 4 The table shows data for two capacitors **P** and **Q**. Each capacitor contains a dielectric material.

	P	**Q**
Plate area	A	$3A$
Plate separation	d	$1.5d$
Relative permittivity of the dielectric	ε_r	$2\varepsilon_r$
Potential difference across the plates	V	$2V$
Energy stored / mJ	80	

What is the energy stored by capacitor **Q**?

[1 mark]

A 160 mJ ⬭

B 320 mJ ⬭

C 640 mJ ⬭

D 1280 mJ ⬭

Turn over for the next question

Do not write outside the box

2 5 The graph shows the variation of the charge Q on a capacitor with the potential difference V across it.

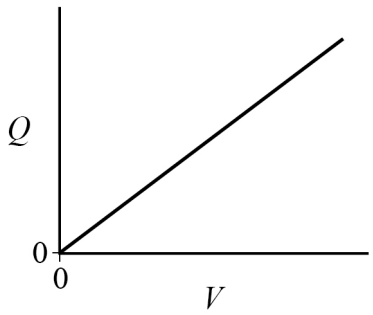

Which row shows the significance of the gradient of the graph and the area between the line and the V axis?

[1 mark]

	Gradient of the graph	Area between the line and the V axis	
A	Charging current	Time constant	⬭
B	Charging current	Energy stored in the capacitor	⬭
C	Capacitance of the capacitor	Time constant	⬭
D	Capacitance of the capacitor	Energy stored in the capacitor	⬭

2 6 Which of the following is equivalent to the time constant for a circuit used to charge or discharge a capacitor?

[1 mark]

A Minus the reciprocal of the gradient of a graph of ln(charge remaining) against time when the capacitor is discharging. ⬭

B The gradient of a graph of charge against time for the discharging capacitor at time $t = 0$ ⬭

C The time taken for the charge to increase to $\frac{1}{e}$ times the maximum charge when the capacitor is charging. ⬭

D The time taken for the charge to fall to half of the initial charge when the capacitor is discharging. ⬭

Do not write outside the box

2 7 The graph shows the variation with time of the number of nuclei of a radioactive nuclide in a sample.

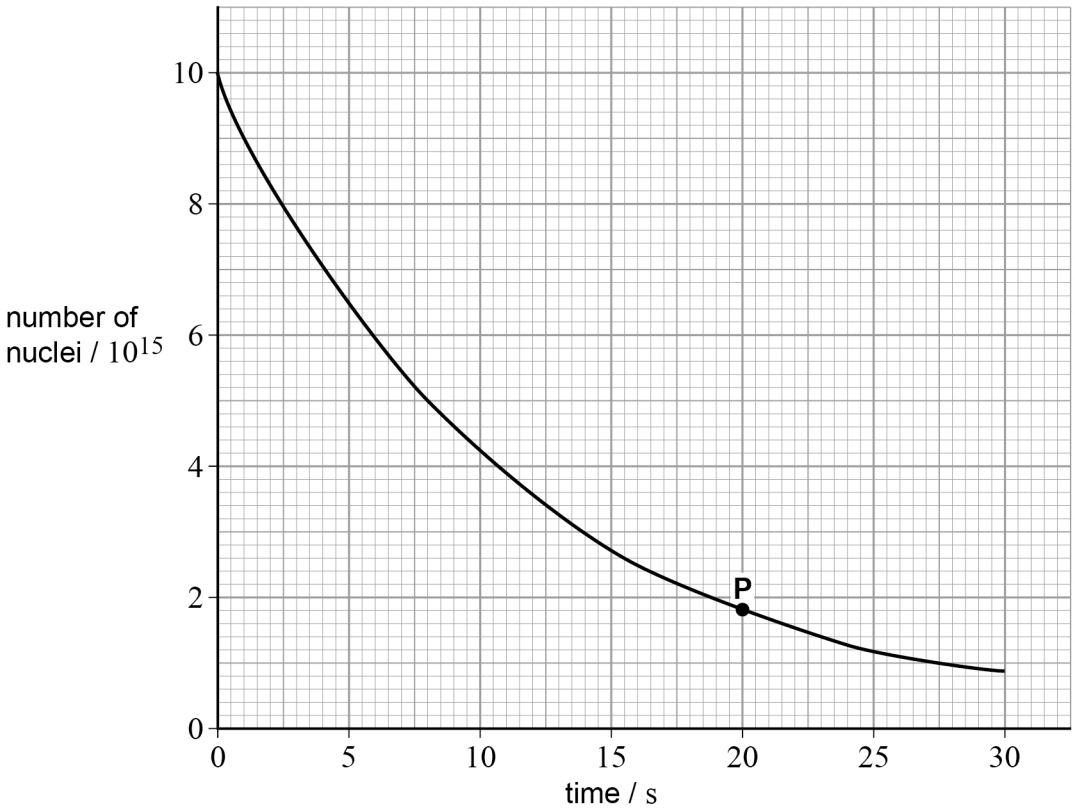

What is the activity of the sample at **P**?

[1 mark]

A 0.9×10^{14} Bq

B 1.6×10^{14} Bq

C 4.0×10^{14} Bq

D 2.0×10^{15} Bq

Turn over for the next question

Do not write outside the box

2 8 Radioactive decay is considered to be:

[1 mark]

A spontaneous because all nuclei of a particular nuclide have different decay constants. ⬭

B random because it is not possible to predict whether a nucleus will emit an alpha particle, a beta particle or a gamma ray. ⬭

C random because it is not possible to predict when a particular nucleus will decay. ⬭

D spontaneous because it happens suddenly when triggered by an event. ⬭

2 9 A radioactive source initially contains $6.0\ \text{mg}$ of cobalt-60
The half-life of cobalt-60 is $1.66 \times 10^{8}\ \text{s}$.

What is the initial activity of the source?

[1 mark]

A $2.5 \times 10^{11}\ \text{Bq}$ ⬭

B $2.5 \times 10^{12}\ \text{Bq}$ ⬭

C $7.9 \times 10^{18}\ \text{Bq}$ ⬭

D $1.0 \times 10^{27}\ \text{Bq}$ ⬭

Do not write outside the box

3 0 A current-carrying wire lies horizontally in a magnetic field of magnetic flux density $0.10\ \mathrm{T}$.
The magnetic flux density B is directed perpendicularly into the page.
The wire is made from a material that contains 8.5×10^{28} free electrons per m^3.
The mean speed of the free electrons is $1.8 \times 10^{-4}\ \mathrm{m\ s^{-1}}$.
The wire has a volume of $100\ \mathrm{mm}^3$.

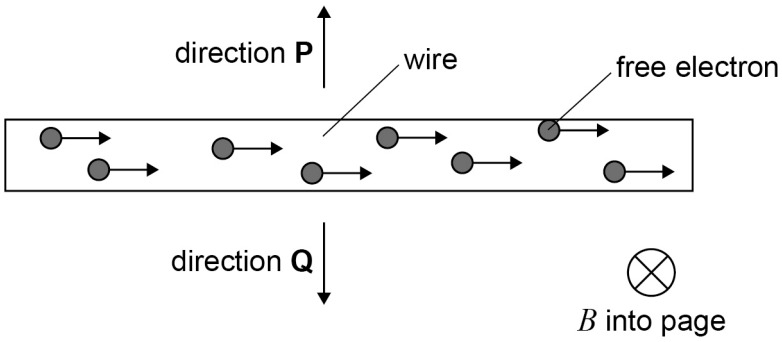

What are the magnitude and direction of the force experienced by the wire?

[1 mark]

A $0.024\ \mathrm{N}$ in direction **P** ⬭

B $2.4\ \mathrm{N}$ in direction **P** ⬭

C $0.024\ \mathrm{N}$ in direction **Q** ⬭

D $2.4\ \mathrm{N}$ in direction **Q** ⬭

Turn over for the next question

Do not write outside the box

3 1 A single rectangular coil has a length of 8.0 cm and a width of 5.0 cm.
The plane of the coil is at 30° to the horizontal in a magnetic field. The magnetic field has a magnetic flux density of 0.080 T directed horizontally as shown. The current in the coil is 2.0 A.

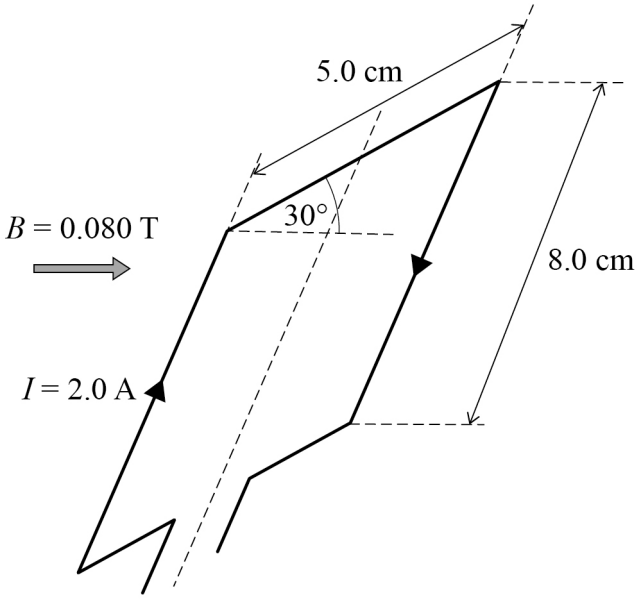

What is the moment of the couple experienced by the coil?

[1 mark]

A 3.2×10^{-4} N m

B 3.7×10^{-4} N m

C 5.5×10^{-4} N m

D 6.4×10^{-4} N m

3 2 Which statement is correct about the motion of charged particles in a cyclotron?

[1 mark]

A Their speed increases in the electric field between the dees.

B Their speed increases in the magnetic field within the dees.

C Their path is parabolic inside a dee.

D Their path is a spiral inside a dee.

Do not write outside the box

3 3 A closed horizontal conducting coil falls vertically through a uniform horizontal magnetic field. The coil has a small resistance.

View from above

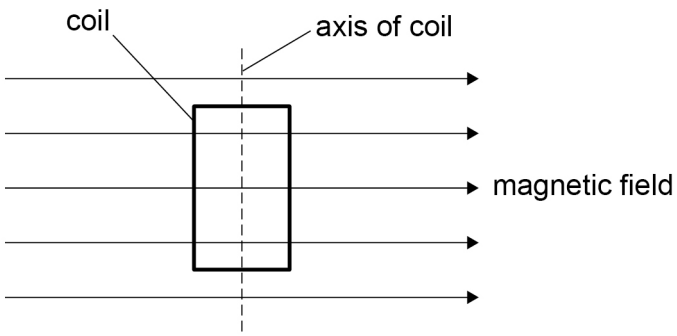

Due to its movement through the magnetic field, the coil will experience:

[1 mark]

A a moment about its axis but no resultant force. ⬭

B a downward force only. ⬭

C an upward force only. ⬭

D no resultant force and no moment about its axis. ⬭

Turn over for the next question

Do not write outside the box

3 4 The diagrams show a proton p and an antiproton $\bar{p}$ entering a uniform magnetic field.
The magnetic flux density is directed out of the page.
The proton and antiproton are too far apart to experience electrostatic attraction.

Which diagram shows the motion of the proton p and the antiproton $\bar{p}$?

[1 mark]

A

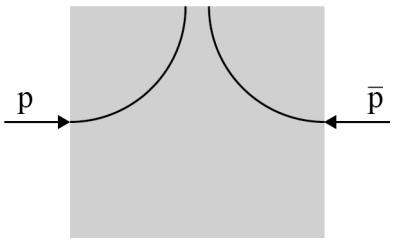

B

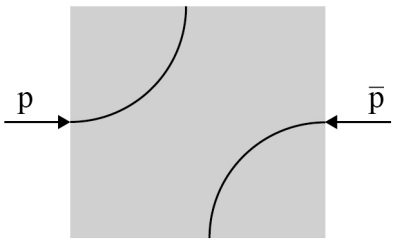

C

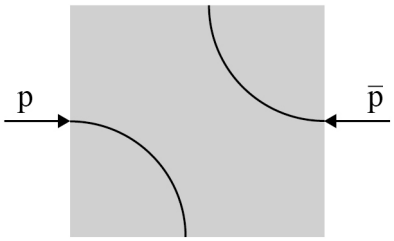

D

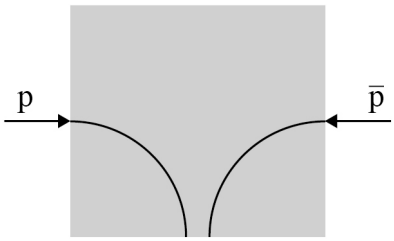

A ⬭

B ⬭

C ⬭

D ⬭

3 5 A transformer has a secondary rms current of $0.30\ \text{A}$, 400 turns on the primary coil and 2000 turns on the secondary coil.
The resistance of the primary coil is $2.0 \times 10^{-3}\ \Omega$.
Assume that the power loss has a negligible effect on the overall efficiency of the transformer.

What is the power loss in the primary coil?

[1 mark]

A 7.2×10^{-6} W ⬭

B 1.2×10^{-4} W ⬭

C 3.0×10^{-3} W ⬭

D 4.5×10^{-3} W ⬭

30

END OF QUESTIONS

Do not write outside the box

There are no questions printed on this page

DO NOT WRITE ON THIS PAGE
ANSWER IN THE SPACES PROVIDED

Do not write outside the box

Question number	**Additional page, if required.** **Write the question numbers in the left-hand margin.**

Do not write outside the box

Question number	**Additional page, if required.** **Write the question numbers in the left-hand margin.**

Do not write outside the box

Question number	**Additional page, if required.** **Write the question numbers in the left-hand margin.**

Do not write outside the box

Question number	**Additional page, if required.** **Write the question numbers in the left-hand margin.**

Do not write outside the box

Question number	**Additional page, if required.** **Write the question numbers in the left-hand margin.**

Do not write outside the box

There are no questions printed on this page

DO NOT WRITE ON THIS PAGE
ANSWER IN THE SPACES PROVIDED

Copyright information

For confidentiality purposes, acknowledgements of third-party copyright material will be published in a separate booklet rather than including them on the examination paper or support materials. This booklet is published after each examination series and is available for free download from www.oxfordaqaexams.org.uk after the live examination series.

Permission to reproduce all copyright material has been applied for. In some cases, efforts to contact copyright-holders may have been unsuccessful and Oxford International AQA Examinations will be happy to rectify any omissions of acknowledgements. If you have any queries please contact the Copyright Team, AQA, Stag Hill House, Guildford, GU2 7XJ.

Copyright © 2019 Oxford International AQA Examinations and its licensors. All rights reserved.