OCR
Oxford Cambridge and RSA

H

Wednesday 12 June 2019 – Morning

GCSE (9–1) Chemistry B (Twenty First Century Science)

J258/04 Depth in Chemistry (Higher Tier)

Time allowed: 1 hour 45 minutes

You must have:
- a ruler (cm/mm)
- the Data Sheet (for GCSE Chemistry B (inserted))

You may use:
- a scientific or graphical calculator
- an HB pencil

Please write clearly in black ink. **Do not write in the barcodes.**

Centre number | | | | | | Candidate number | | | | |

First name(s) _____

Last name _____

INSTRUCTIONS
- The Data Sheet will be found inside this document.
- Use black ink. You may use an HB pencil for graphs and diagrams.
- Answer **all** the questions.
- Where appropriate, your answers should be supported with working. Marks may be given for a correct method even if the answer is incorrect.
- Write your answer to each question in the space provided. If additional space is required, you should use the lined page(s) at the end of this booklet. The question number(s) must be clearly shown.

INFORMATION
- The total mark for this paper is **90**.
- The marks for each question are shown in brackets **[ ]**.
- Quality of extended responses will be assessed in questions marked with an asterisk (*).
- This document consists of **28** pages.

© OCR 2019 [601/8605/7]
DC (RW/CB) 173678/4
OCR is an exempt Charity

Answer **all** the questions.

1 Alex collects some samples of minerals from a spoil heap near an old mine.

Alex tests two samples of minerals, **A** and **B**, to identify the ions that they contain.

(a) He carries out flame tests on each sample and compares his results (**Table 1.1**) to a reference book of flame colours for some metal ions (**Table 1.2**).

Alex's results

Mineral	Flame colour
A	green
B	orange-red

Table 1.1

Reference book

Metal ion	Flame colour
copper	blue-green
calcium	orange-red
iron	varies with temperature blue/green/yellow/orange
zinc	green

Table 1.2

Use information from **Table 1.1** and **Table 1.2** to explain why Alex cannot be certain which ions are in the samples.

.....

.....

.....

..... **[3]**

(b) Alex makes a solution of a sample of each mineral in water and does some further tests.

The tests he carries out, and his results, are shown in **Table 1.3**.

Mineral	Test	Result
A	Add dilute sodium hydroxide.	blue precipitate
	Add dilute hydrochloric acid.	fizzes, gas given off turns lime water milky
	Add dilute silver nitrate.	white precipitate
B	Add dilute sodium hydroxide.	white precipitate does not dissolve in excess
	Add dilute hydrochloric acid.	no change
	Add dilute silver nitrate.	white precipitate

Table 1.3

© OCR 2019

(i) Alex thinks that mineral **A** contains two negative ions.

How can you tell from the results that Alex is right?

.....

..... **[1]**

(ii) Identify the ions in mineral **A** and mineral **B**.

Choose words from this list.

copper **calcium** **iron** **zinc** **carbonate** **chloride** **sulfate**

Ions in mineral A	Ions in mineral B
....	....

[3]

(c) Alex also has an emission spectroscopy machine to analyse samples of minerals.

Give **one** advantage of using an emission spectroscopy machine, rather than flame tests or chemical tests, to identify samples.

.....

..... **[1]**

© OCR 2019

2 Silver nanoparticles are used in some socks to remove the smell of sweaty feet.

Silver nanoparticles have different properties to larger pieces of silver because they have a different surface area to volume ratio.

(a) The diagram shows what happens when a larger cube of silver is cut into eight smaller cubes.

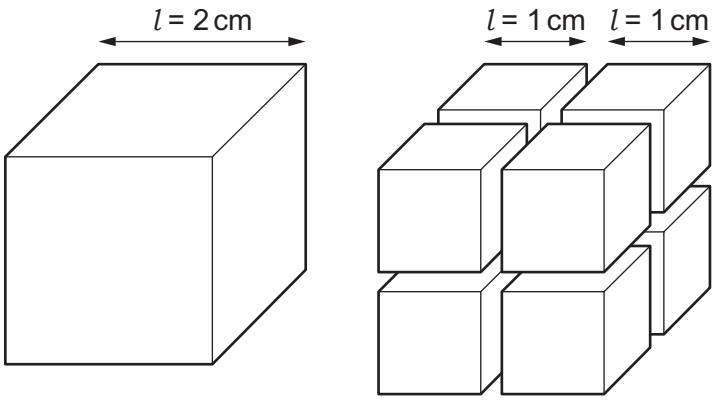

The volume and surface area of a cube can be worked out using these formulae:

volume = $l \times l \times l$

surface area = $6 \times l \times l$

Table 2.1 shows the volume, surface area, and surface area to volume ratio for the larger cube.

Property	**Larger cube**	**Smaller cubes**
Total volume (cm^3)	8	.....
Total surface area (cm^2)	24	.....
Surface area to volume ratio (per cm)	3	.....

Table 2.1

© OCR 2019

(i) Complete **Table 2.1** by filling in the blank spaces for the eight smaller cubes.

Use this space to show your working.

[3]

(ii) Use ideas about surface area and volume to explain why nanoparticles of silver have a different surface area to volume ratio than larger silver particles.

.....

.....

..... **[2]**

(b) New research has shown that nanoparticles may be used to treat cancer. However, some scientists are worried about the negative effects of nanoparticles on the body.

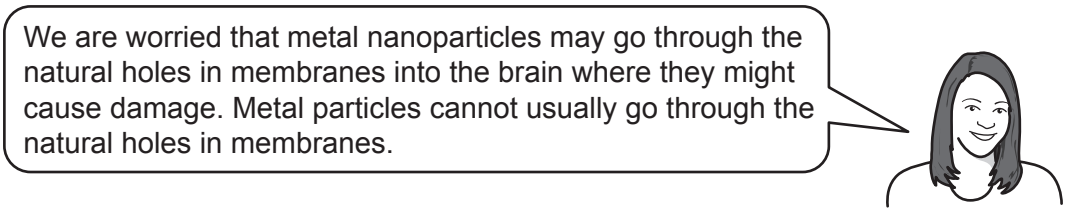

(i) Explain why metal nanoparticles may be able to enter the brain even though metal particles usually cannot.

.....

.....

.....

..... **[2]**

(ii) Use ideas about **risk** and **benefit** to evaluate the use of nanoparticles in socks and to treat cancer.

.....

.....

.....

.....

.....

..... **[3]**

© OCR 2019

3 Ali investigates how the pH changes when dilute sodium hydroxide reacts with dilute hydrochloric acid.

He puts 20.0 cm^3 of dilute hydrochloric acid in a beaker. He adds dilute sodium hydroxide, 1.0 cm^3 at a time, to the acid.

He uses a pH meter to measure the pH after each addition of sodium hydroxide.

Ali plots a graph of his results.

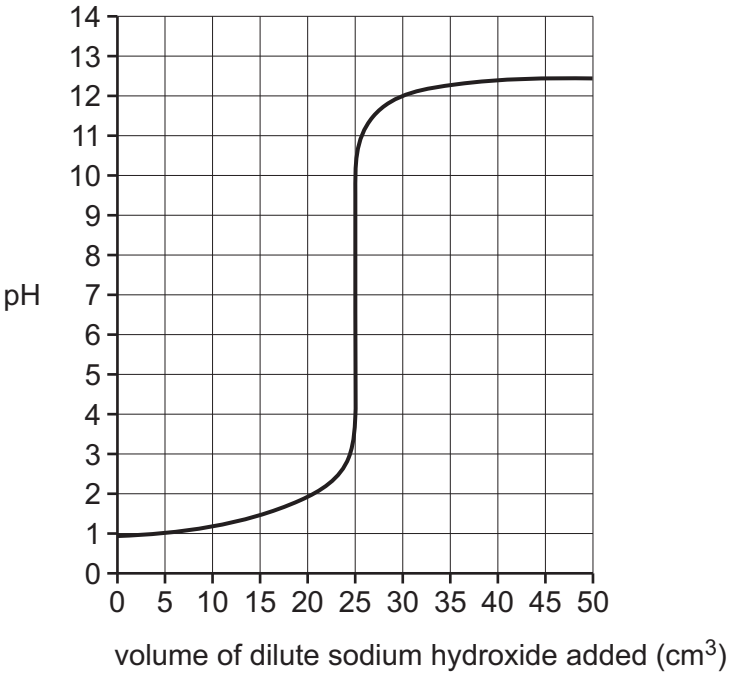

Ali writes an ionic equation for the reaction.

$H^+ + OH^- \rightarrow H_2O$

(a) Use the **ionic equation** and **values from the graph** to explain the pH changes that happen during the reaction.

.....

.....

.....

.....

.....

..... **[3]**

© OCR 2019

(b) Ali started with **20.0 cm^3** of dilute hydrochloric acid in the beaker.

Explain how his results show that the acid is more concentrated than the dilute sodium hydroxide.

.....

.....

..... **[2]**

© OCR 2019

4 The repeating unit of some polymers has the structure shown in **Fig. 4.1**.

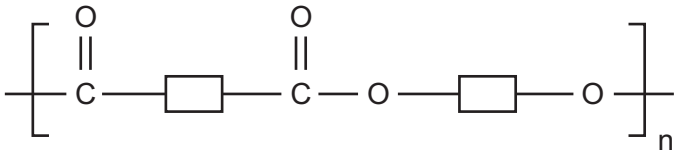

Fig. 4.1

(a) What is the name for this type of polymer?

Put a ring around the correct answer.

addition **polyamide** **polyamine** **polyester** **oxidised**

[1]

(b) One repeating unit of the polymer can be broken down by a reaction with water into its monomers, **molecule A** and **molecule B**, as shown in **Fig. 4.2**.

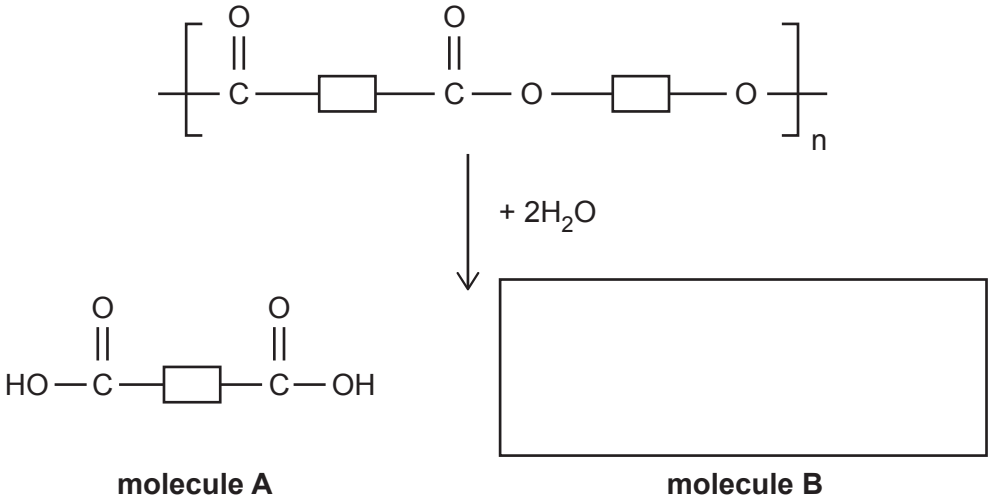

Fig. 4.2

(i) Complete the diagram in **Fig. 4.2** by drawing the structure of **molecule B**. **[1]**

(ii) The polymer was originally made by reacting monomers, **molecule A** and **molecule B**, together.

How is the reaction to make the polymer different from the reaction in **Fig. 4.2**?

Explain your answer.

.....

.....

.....

..... **[2]**

© OCR 2019

(iii) Explain why **molecule A** is called a **dicarboxylic acid**.

.....

.....

..... **[2]**

(c) PET is a type of polymer used to make drinks bottles.

PET has the repeating unit shown in **Fig. 4.3**.

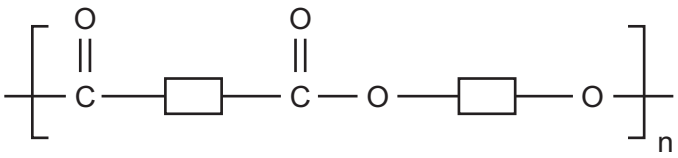

Fig. 4.3

In molecules of PET, ☐ represents C_2H_4.

The average relative formula mass of polymer molecules in a sample of PET is 55 000.

How many repeating units does each polymer molecule contain?

Give your answer to the **nearest whole number**.

Number of repeating units = ... **[2]**

© OCR 2019

5 Malachite is an ore of copper that contains copper carbonate, $CuCO_3$. It is mined on a large scale all over the world.

The flowchart in **Fig. 5.1** shows how copper can be made from copper carbonate, either in industry, or on a small scale in the laboratory.

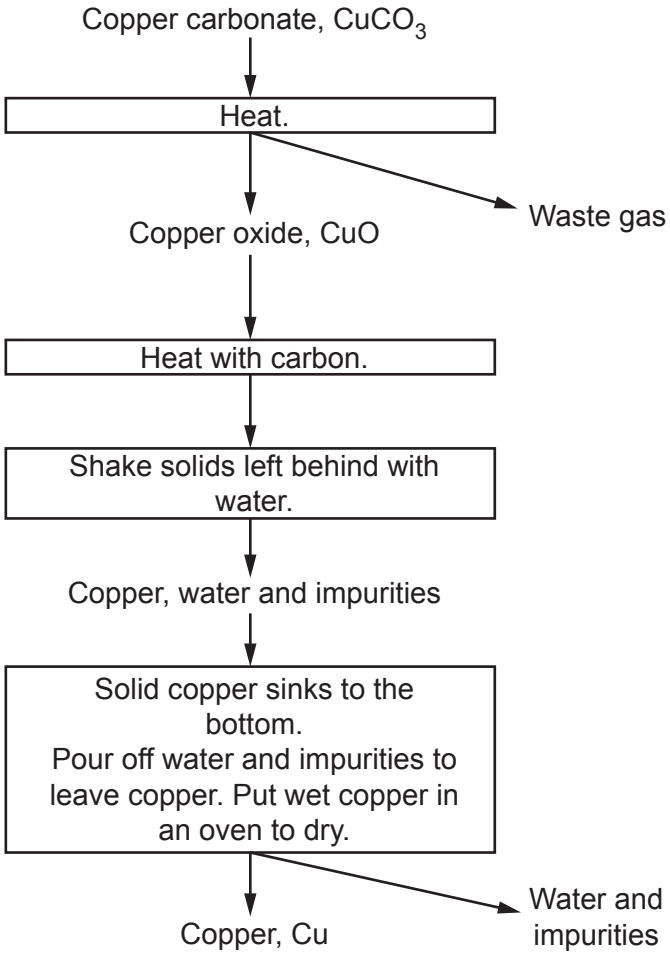

Fig. 5.1

(a) Write a **symbol equation** for the reaction that happens when copper carbonate is heated.

..... **[2]**

(b) Copper made by the method in **Fig. 5.1** contains solid impurities.

Name **two** solid impurities that the copper may contain.

..... **and** ..... **[2]**

© OCR 2019

(c) Jane uses the flowchart in **Fig. 5.1** as a method in the laboratory.

Jane's teacher gives her this equation to help her to work out her theoretical yield of copper.

theoretical yield = 0.51 × mass of copper carbonate at start

(i) Jane uses the equation to work out what mass of copper carbonate she should use to make a theoretical yield of 5.0 g of copper.

Calculate the starting mass of copper carbonate she should use.

Give your answer to **2** significant figures.

Mass of copper carbonate = ... g **[3]**

(ii) When Jane follows her method, she only makes 2.4 g of copper.

Calculate Jane's percentage yield.

Percentage yield = ... % **[2]**

(iii) Jane comments on her method.

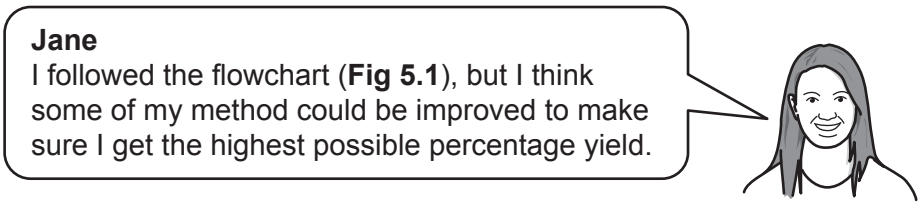

Suggest what Jane could do to make sure she gets the highest possible percentage yield.

Use the flowchart in **Fig. 5.1** to support your answer.

.....

.....

..... **[2]**

© OCR 2019

(d) New methods of copper extraction have been developed.

One of these methods uses bacteria to extract copper from the ground around old mines.

Evaluate the effects on the environment of using bacteria to extract copper compared to the method in the flow chart.

.....

.....

.....

.....

..... **[3]**

© OCR 2019

BLANK PAGE

PLEASE DO NOT WRITE ON THIS PAGE

© OCR 2019

6 Ammonium sulfate is a fertiliser. It is usually sold to farmers as a solid in large sacks.

Different industrial processes can be used to make ammonium sulfate, as shown in **Table 6.1**.

Process	Equation	How the process works	Other points
1	$2NH_3 + H_2SO_4 \rightarrow (NH_4)_2SO_4$	Reactor kept at 60 °C. Uses concentrated sulfuric acid. A solution of ammonium sulfate is made.	Reaction is exothermic. Atom economy 100%.
2	$2NH_3 + H_2SO_4 \rightarrow (NH_4)_2SO_4$	Sulfuric acid is sprayed into dry ammonia gas. Any water in the mixture evaporates. Dry powdered ammonium sulfate is made.	Reaction is exothermic. Atom economy 100%.
3	$(NH_4)_2CO_3 + CaSO_4 \rightarrow (NH_4)_2SO_4 + CaCO_3$	Calcium carbonate forms as a precipitate in a solution of ammonium sulfate.	Calcium carbonate is a waste product.

Table 6.1

Use information from **Table 6.1** to answer these questions.

(a) Both **process 1** and **process 2** are exothermic.

Explain why an exothermic reaction has a positive effect on how each process works.

.....

.....

.....

.....

.....

..... **[3]**

© OCR 2019

(b) **Process 1** and **process 3** both need to go through further separation after the main reactions.

How can pure, solid ammonium sulfate be separated from the reaction mixtures in **process 1** and **process 3**?

Process 1 .....

.....

Process 3 .....

..... **[2]**

(c) Use relative formula masses to calculate the **atom economy** of **process 3**.

Give your answer to **1** decimal place.

Atom economy = ... % **[3]**

(d) The **sustainability** of each process in **Table 6.1** is different.

(i) Explain what **sustainability** means.

.....

..... **[1]**

(ii) Give **two** examples from **Table 6.1** to explain why some processes are more sustainable than others.

.....

.....

..... **[2]**

(e) **Process 3** can be carried out as a batch process in the laboratory.

In industry, **process 3** is carried out as a continuous process.

Explain why batch processes are more suitable for use in the laboratory, but continuous processes are more suitable for industry.

.....

.....

..... **[2]**

© OCR 2019

7* Li is planning a presentation on sodium chloride.

She looks for a diagram to show the bonding, structure, movement and arrangement of particles in solid sodium chloride.

She finds these diagrams.

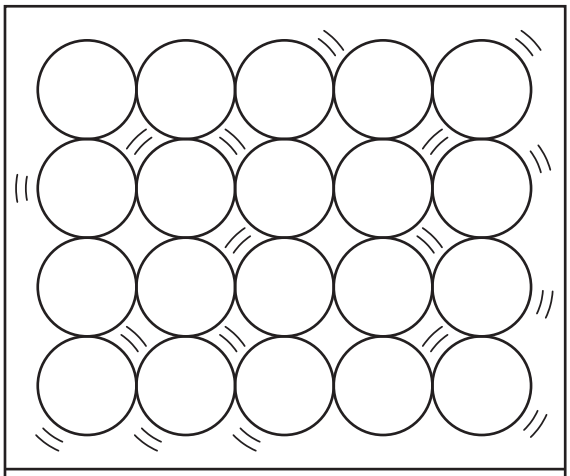

Diagram A

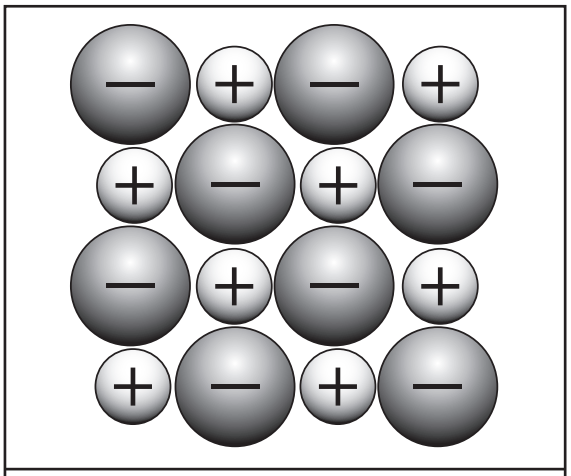

Diagram B

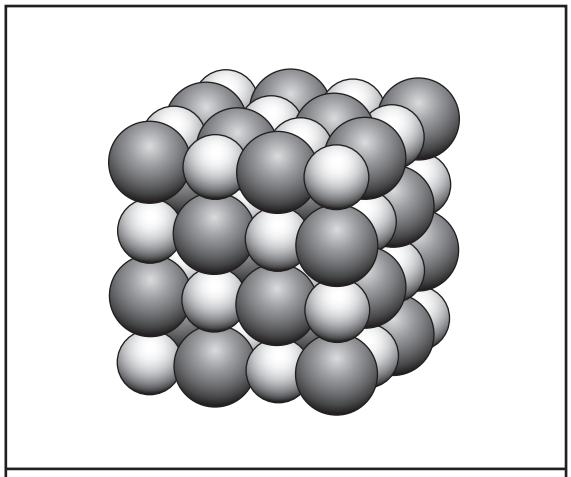

Diagram C

© OCR 2019

Discuss the **advantages** and **disadvantages** of using each diagram to represent solid sodium chloride **and** outline the features that an ideal diagram should have.

.....

.....

.....

.....

.....

.....

.....

.....

.....

.....

.....

..... **[6]**

© OCR 2019

8* Mia wants to investigate the trend in reactivity for Group 7 elements.

She adds chlorine water to a solution of potassium bromide.

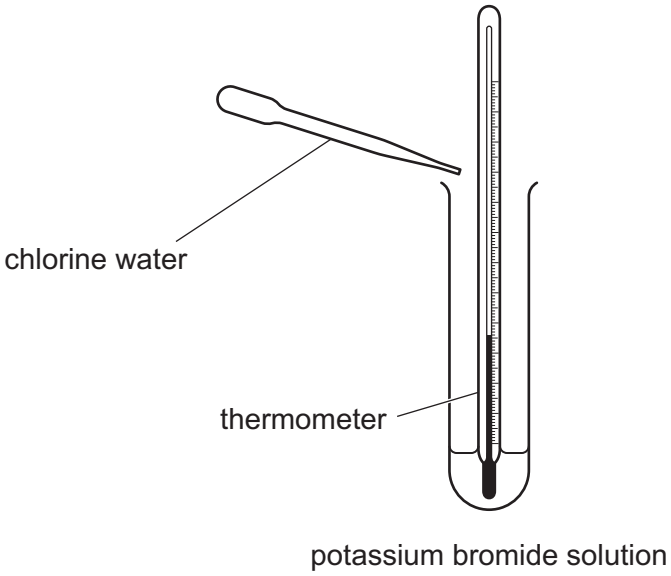

She looks for a temperature change and a colour change.

She also has access to these solutions.

iodine water	potassium iodide
bromine water	potassium bromide
chlorine water	potassium chloride

© OCR 2019

Describe what Mia needs to do to find out the trend in reactivity of the Group 7 elements **and** describe what observations and conclusions she should expect.

.....

.....

.....

.....

.....

.....

.....

.....

.....

.....

.....

..... **[6]**

© OCR 2019

9 The table shows information about some transition elements.

Metal	Melting point (°C)	Colour of metal oxide	Common positive ions
mercury	–39	red	Hg_2^{2+} Hg^{2+}
vanadium	1910	orange-brown	V^{2+} V^{3+}
copper	1100	black or red	Cu^{+} Cu^{2+}
chromium	1900	dark green or black	Cr^{2+} Cr^{3+}
zinc	420	white	Zn^{2+}

(a) Which two statements about the melting points are true?

Tick (✓) **two** boxes.

The melting point of mercury is > room temperature (20 °C). ☐

The melting point of chromium ~ the melting point of vanadium. ☐

The melting point of copper >> the melting point of mercury. ☐

The melting point of chromium < the melting point of zinc. ☐

[2]

(b) Mercury and zinc are **not** typical transition metals.

Use information from the table to explain why.

.....

.....

..... **[3]**

(c) Copper can form **two** oxides with different formulae. In both formulae, the oxide ion is O^{2-}.

Write the formulae for the **two** oxides.

Use information from the table to help you.

..... **and** ..... **[2]**

(d) Chromium also forms an **oxyanion** with the formula CrO_4^{2-}.

Suggest why this ion is known as an **oxyanion**.

.....

..... **[2]**

© OCR 2019

(e) Which statement describes another correct property for transition metals?

Tick (✓) **one** box.

Transition metals make good catalysts. ☐

Transition metal oxides are usually gases. ☐

Transition metal compounds conduct electricity when solid. ☐

Transition metals are less dense than other metals. ☐

[1]

© OCR 2019

BLANK PAGE

PLEASE DO NOT WRITE ON THIS PAGE

© OCR 2019

10 Over the last 20 years there have been a series of agreements between governments to limit the emission of greenhouse gases. These gases include carbon dioxide, methane and nitrous oxides.

(a) Governments are more concerned about reducing the emissions of carbon dioxide than reducing the emissions of the other gases.

The table shows some measurements of the concentrations of these gases in the atmosphere now.

Gas	Concentration in the atmosphere
carbon dioxide	0.04%
methane	1800 ppb (parts per billion)
nitrous oxides	1400 ppb (parts per billion)

(i) Calculate the **percentage** of methane in the atmosphere.

1.0 ppb = 1.0×10^{-7}%

Methane = ... % **[2]**

(ii) Use your answer to **(a)(i)** to explain why governments are more concerned about carbon dioxide emissions than emissions of the other gases in the table.

.....

.....

..... **[2]**

© OCR 2019

(b) The first major agreement between countries was the 1997 Kyoto Protocol.
This graph shows the concentration of some greenhouse gases in the atmosphere before the Kyoto Protocol was introduced.

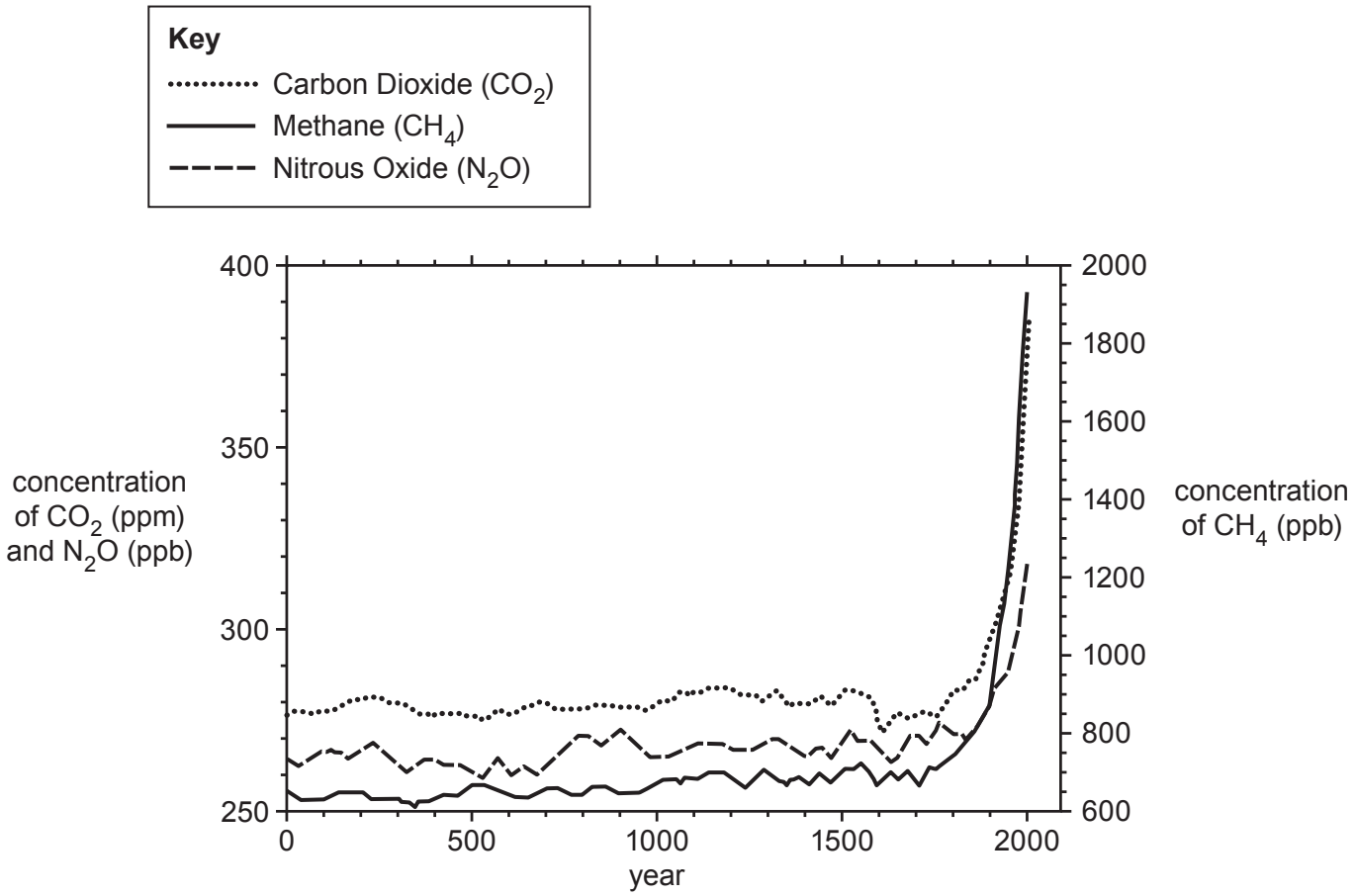

Some people discuss the graph.

Amaya

The concentration of nitrous oxide is usually about 20 ppm lower than the concentration of carbon dioxide.

In 2000, concentration of carbon dioxide was about three times higher than it was 2000 years ago.

James

Layla

The concentration of methane has increased by about 50% during the period shown on the graph.

There are general correlations on the graph but annual concentrations do not show close correlations.

Amir

© OCR 2019

Does the data in the graph support each person's point of view?

Use data from the graph to explain each answer.

Person	Explanation
Amaya	....
James	....
Layla	....
Amir	....

[6]

END OF QUESTION PAPER

© OCR 2019

ADDITIONAL ANSWER SPACE

If additional space is required, you should use the following lined page(s). The question number(s) must be clearly shown in the margin(s).

© OCR 2019

© OCR 2019

OCR
Oxford Cambridge and RSA

Copyright Information

OCR is committed to seeking permission to reproduce all third-party content that it uses in its assessment materials. OCR has attempted to identify and contact all copyright holders whose work is used in this paper. To avoid the issue of disclosure of answer-related information to candidates, all copyright acknowledgements are reproduced in the OCR Copyright Acknowledgements Booklet. This is produced for each series of examinations and is freely available to download from our public website (www.ocr.org.uk) after the live examination series.

If OCR has unwittingly failed to correctly acknowledge or clear any third-party content in this assessment material, OCR will be happy to correct its mistake at the earliest possible opportunity.

For queries or further information please contact The OCR Copyright Team, The Triangle Building, Shaftesbury Road, Cambridge CB2 8EA.

OCR is part of the Cambridge Assessment Group; Cambridge Assessment is the brand name of University of Cambridge Local Examinations Syndicate (UCLES), which is itself a department of the University of Cambridge.

© OCR 2019