OCR
Oxford Cambridge and RSA

H

Tuesday 23 November 2021 – Morning

GCSE (9–1) Physics A (Gateway Science)

J249/03 Paper 3 (Higher Tier)

Time allowed: 1 hour 45 minutes

You must have:
- a ruler (cm/mm)
- the Data Sheet for GCSE (9–1) Physics A (inside this document)

You can use:
- a scientific or graphical calculator
- an HB pencil

Please write clearly in black ink. **Do not write in the barcodes.**

Centre number | | | | | | Candidate number | | | | |

First name(s) _____

Last name _____

INSTRUCTIONS
- Use black ink. You can use an HB pencil, but only for graphs and diagrams.
- Write your answer to each question in the space provided. If you need extra space use the lined pages at the end of this booklet. The question numbers must be clearly shown.
- Answer **all** the questions.
- Where appropriate, your answer should be supported with working. Marks might be given for using a correct method, even if your answer is wrong.

INFORMATION
- The total mark for this paper is **90**.
- The marks for each question are shown in brackets **[ ]**.
- Quality of extended response will be assessed in questions marked with an asterisk (*).
- This document has **28** pages.

ADVICE
- Read each question carefully before you start your answer.

© OCR 2021 [601/8651/3]
DC (PQ/SG) 300827/8
OCR is an exempt Charity

SECTION A

Answer **all** the questions.

You should spend a maximum of 30 minutes on this section.

Write your answer to each question in the box provided.

1 Which row in the table correctly describes gravitational fields?

	Type of field	Strength of field
A	Attractive	Greater for massive objects
B	Attractive	Less for massive objects
C	Repulsive	Greater for massive objects
D	Repulsive	Less for massive objects

Your answer ☐ **[1]**

2 A magnetic field line diagram shows the magnetic field between the poles **P** and **Q** of two magnets.

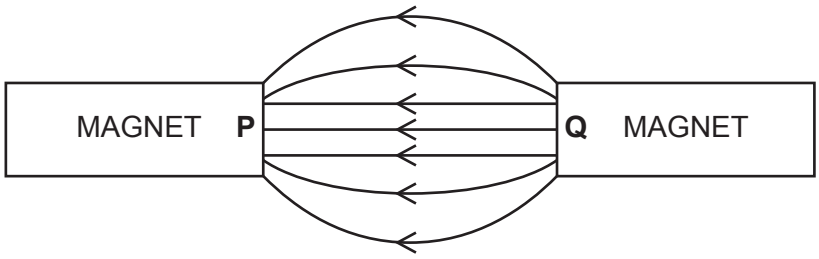

What are the poles **P** and **Q**?

	Pole P	Pole Q
A	North	North
B	North	South
C	South	North
D	South	South

Your answer ☐ **[1]**

© OCR 2021

3 A current is passed through a straight wire.

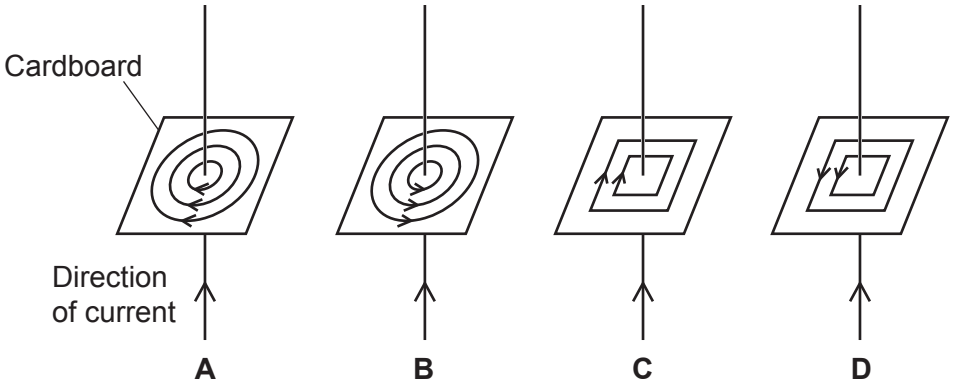

Which diagram shows the magnetic field around the current-carrying wire?

Your answer ☐ **[1]**

4 Two balloons, A and B, repel each other when placed close together.

Which row in the table explains why?

	Balloon A	**Balloon B**
A	Equal numbers of protons and electrons	More protons than electrons
B	Equal numbers of protons and electrons	Equal numbers of protons and electrons
C	More electrons than protons	More electrons than protons
D	More electrons than protons	More protons than electrons

Your answer ☐ **[1]**

© OCR 2021

5 A stopwatch is used by a student for timing how long it takes a toy car to travel down a ramp.

The student repeats the experiment four times during a lesson, using the same equipment and method.

Attempt	**1**	**2**	**3**	**4**
Time taken (s)	2.6	2.4	2.5	2.5

Which words describe the student's results?

A Repeatable and precise

B Repeatable and reproducible

C Reproducible and accurate

D Reproducible and precise

Your answer ☐ **[1]**

6 In a series circuit a current of 50 μA flows.

Which current is the same size as 50 μA?

A 50×10^{-6} A

B 50×10^{-3} A

C 50×10^{3} A

D 50×10^{6} A

Your answer ☐ **[1]**

© OCR 2021

7 A student sets up a balance using a ruler and a pivot.

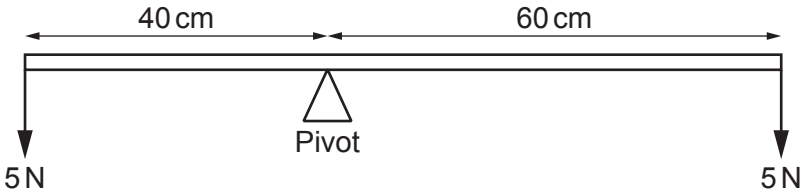

Which statement is correct?

A There is a resultant turning force anti-clockwise of 200 N cm.

B There is a resultant turning force clockwise of 100 N cm.

C There is a resultant turning force clockwise of 300 N cm.

D There is a resultant turning force of 0 N cm.

Your answer ☐ **[1]**

8 A student investigates the magnetic effect of a current in a solenoid with a core. The student makes four different solenoids.

Which solenoid will have the strongest magnetic field?

Solenoid	Number of turns	Core
A	10	Copper
B	10	Iron
C	20	Copper
D	20	Iron

Your answer ☐ **[1]**

9 A fluid under pressure causes a force.

In which direction does the net force always act?

A At right angles to any surface.

B In the opposite direction to the gravitational force.

C In the same direction as the gravitational force.

D Parallel to any surface.

Your answer ☐ **[1]**

© OCR 2021

10 What is the work done when a car is pushed a distance of 0.60 km using a force of 90 N?

A 0.15 J

B 54 J

C 150 J

D 54 000 J

Your answer ☐ **[1]**

11 Which statement is an explanation of **inertia**?

A It is a measure of how difficult it is to change the velocity of an object.

B It is a measure of how difficult it is to electrically charge an object.

C It is a measure of the energy of an object.

D It is a measure of the power of an object.

Your answer ☐ **[1]**

12 A transformer has 100 turns in the primary coil and 200 turns in the secondary coil. The potential difference across the primary coil is 30 V.

What is the potential difference across the secondary coil?

Use an equation from the data sheet to help you.

A 15 V

B 30 V

C 60 V

D 6000 V

Your answer ☐ **[1]**

© OCR 2021

13 The diagrams show four different circuits using identical cells and identical lamps.

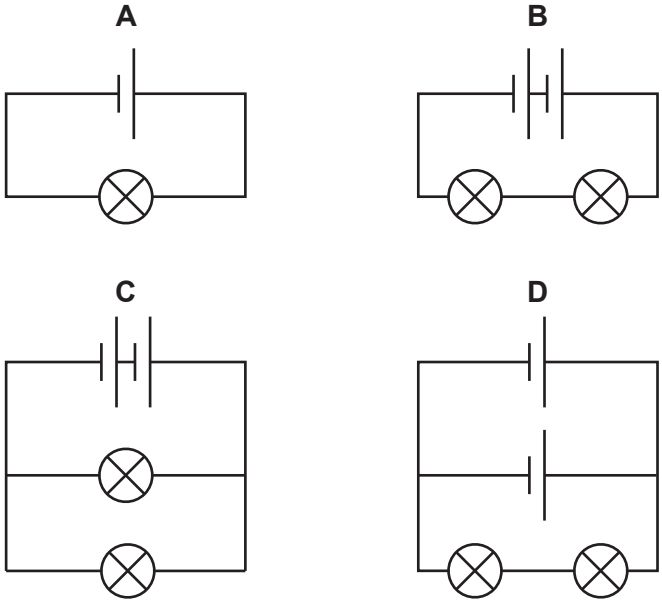

Which circuit will have the brightest lamps?

Your answer ☐ **[1]**

14 A hamster has a mass of 100 g. When the hamster moves it has a momentum of 0.50 kg m / s.

Calculate the velocity of the hamster.

Use the equation: momentum = mass × velocity

A 0.0050 m / s

B 0.20 m / s

C 5.0 m / s

D 200 m / s

Your answer ☐ **[1]**

© OCR 2021

15 A simple hydraulic machine containing water is made from two pistons connected together with plastic tubing. The cross-sectional area of piston **Y** is **twice** the cross-sectional area of piston **X**.

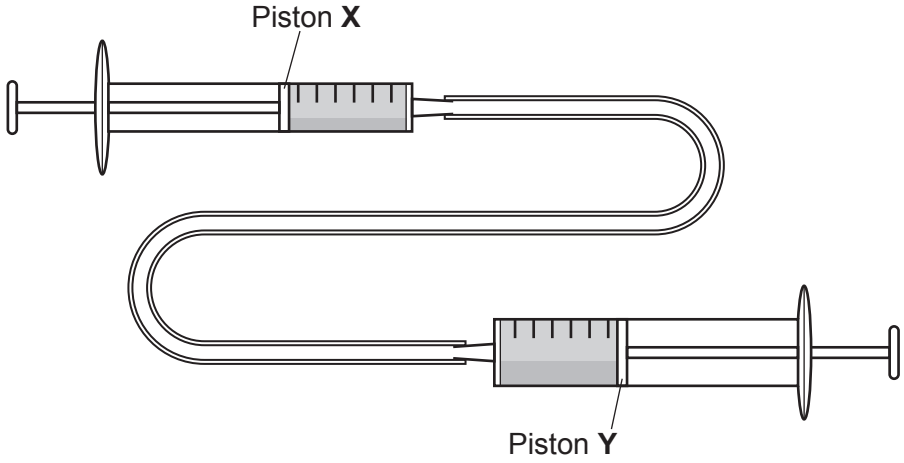

A force of 2 N is exerted on piston **X**.

What is the force exerted on piston **Y**?

A 1 N

B 2 N

C 4 N

D 8 N

Your answer ☐ **[1]**

© OCR 2021

BLANK PAGE

PLEASE DO NOT WRITE ON THIS PAGE

© OCR 2021

SECTION B

Answer **all** the questions.

16 A student travels to a friend's house. This is a distance–time graph of their journey.

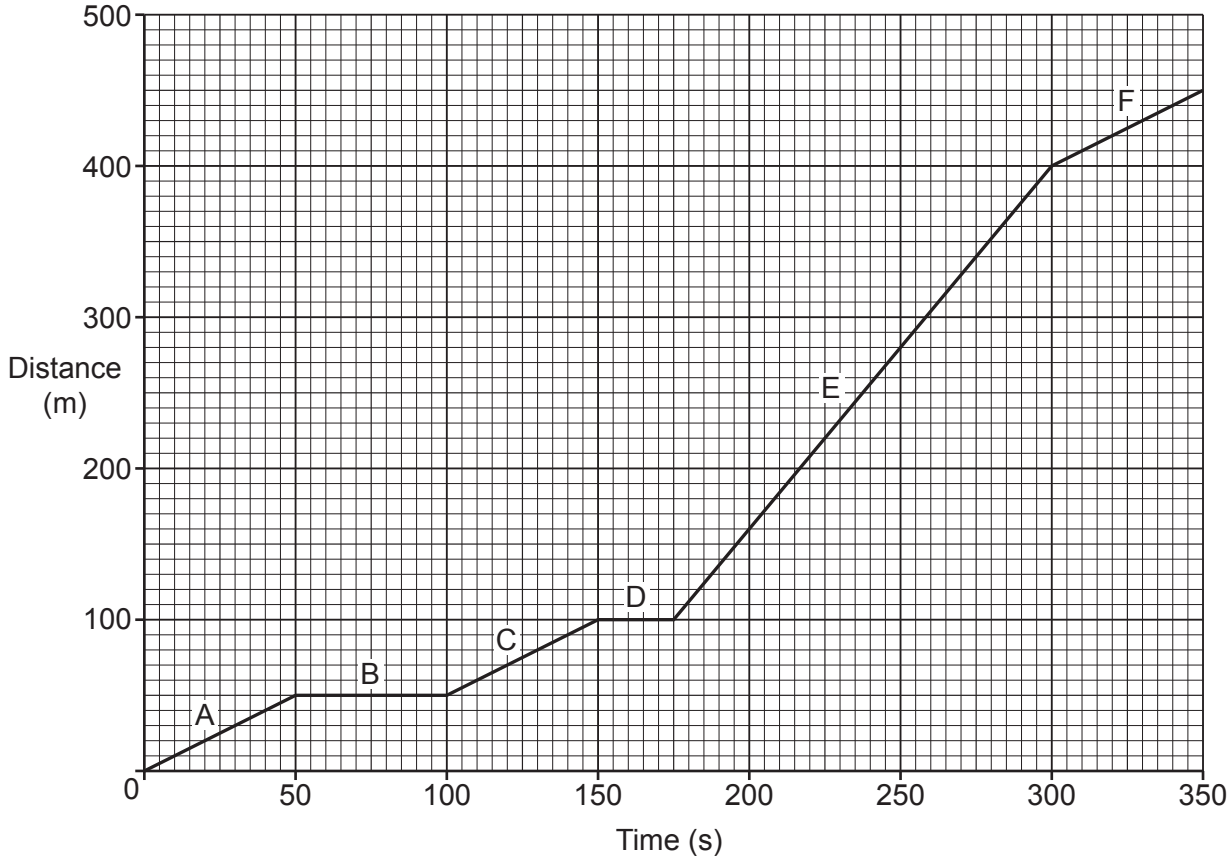

(a) **(i)** State the total distance travelled by the student to their friend's house.

..... **[1]**

(ii) State the total time it takes the student to get to their friend's house.

..... **[1]**

(iii) Calculate the student's average speed during their journey.

Use the equation: distance travelled = speed × time

Average speed = ... m/s **[3]**

© OCR 2021

(iv) State which section of the journey, **A–F**, is where the student travels fastest. Explain your answer.

Section .....

Explanation .....

.....

[2]

(v) Suggest what happens at sections **B** and **D** on the journey.

..... **[1]**

(b) Suggest which equipment the student can use to measure the time and distance on their journey.

Time .....

Distance .....

.....

[1]

© OCR 2021

17 A student does an experiment to calculate the resistance of an unknown component, **Y**.

The student sets up the circuit in **Fig. 17.1**.

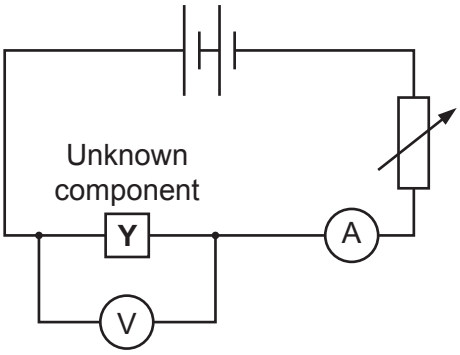

Fig. 17.1

(a) The student needs to be able to measure a current of up to 1 A.

The student has a choice of two different ammeters to use, ammeter **A** and ammeter **B**.

Fig. 17.2 shows the initial readings on the ammeters **before** they are connected to the circuit.

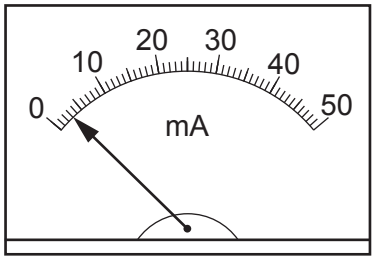

Ammeter **A**

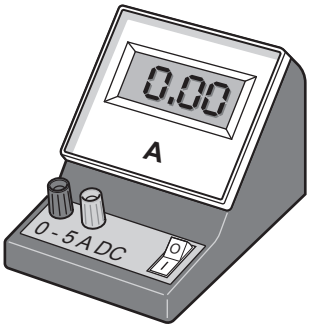

Ammeter **B**

Fig. 17.2

Which ammeter is best for the student to use? Give **two** reasons.

Ammeter .....

Reason 1 .....

.....

Reason 2 .....

.....

[2]

© OCR 2021

(b) The student takes readings of potential difference and current for component **Y** and plots them on a graph.

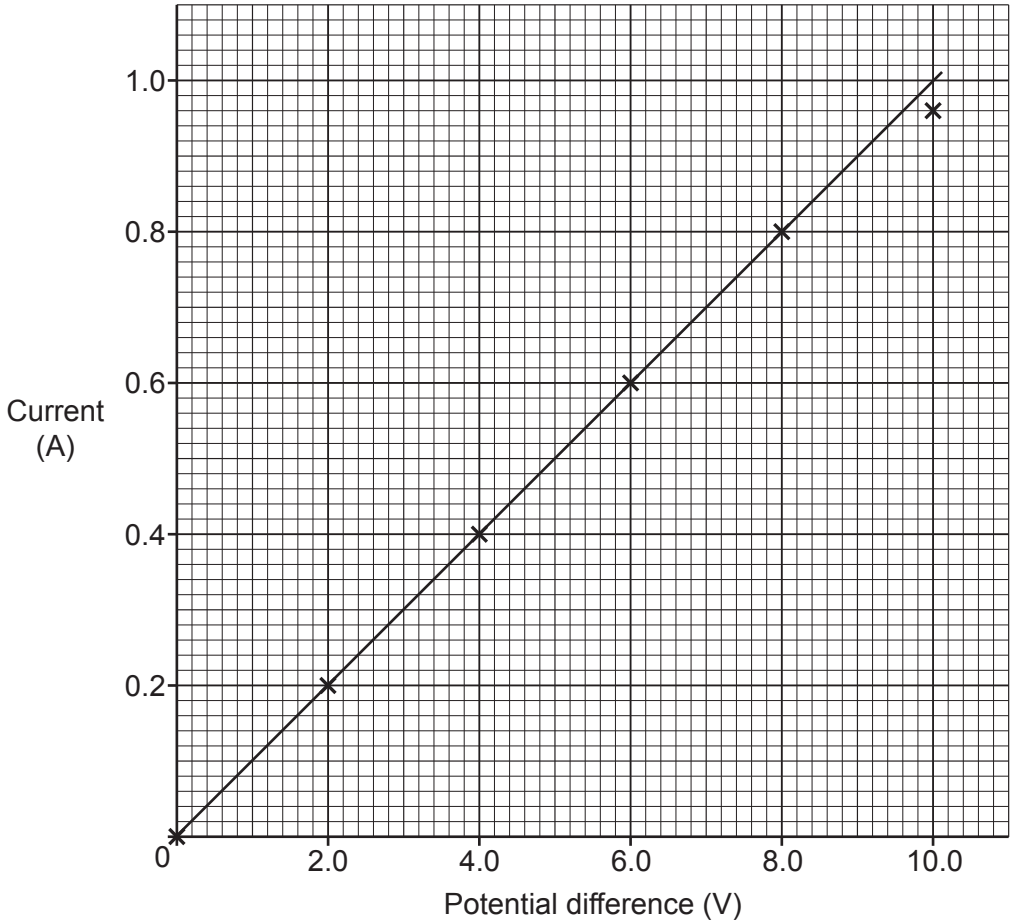

(i) Explain why the student thinks that component **Y** is a fixed resistor.

.....

.....

.....

..... **[2]**

(ii) The student has correctly plotted the point at 10.0 V on the graph.

Suggest **one** reason why the point is not on the line of best-fit.

.....

..... **[1]**

© OCR 2021

(iii) Suggest **two** ways the student can check if their results are reproducible.

1 .....

.....

2 .....

.....

[2]

(c) The resistor has a resistance of 10.0 Ω.

Calculate the power of the resistor when the current is 0.5 A.

Use the equation: power = $(\text{current})^2 \times \text{resistance}$

Power = ... W **[2]**

© OCR 2021

BLANK PAGE

PLEASE DO NOT WRITE ON THIS PAGE

© OCR 2021

18 A student heats 0.20 kg of water in a beaker until it evaporates into steam. The starting temperature of the water is 20 °C.

(a) **(i)** The specific heat capacity of water is 4200 J / kg °C.

Calculate the energy needed to raise the temperature of the water to 100 °C.

Use an equation from the data sheet to help you.

Energy needed = ... J **[2]**

(ii) The specific latent heat of vaporisation of water is 2 260 000 J / kg.

Calculate the energy needed to turn all the water at 100 °C into steam.

Use an equation from the data sheet to help you.

Energy needed = ... J **[2]**

(iii) Use your answers from **(a)(i)** and **(a)(ii)** to calculate the **total** energy needed to turn 0.20 kg of water at 20 °C into steam at 100 °C.

Write your answer in **standard form** and to **2 significant figures**.

Total energy needed = ... J **[3]**

© OCR 2021

(b) **(i)** Suggest **two** reasons why the actual energy needed to turn the water into steam was **more** than the value calculated in **(a)(iii)**.

Reason 1 .....

.....

Reason 2 .....

.....
[2]

(ii) Another student says, 'You should repeat your experiment three times and calculate a mean.'

Suggest **one** advantage of repeating an experiment.

.....

..... **[1]**

© OCR 2021

19* A student stretches two different springs and measures their extensions for different forces. They plot the results on a graph.

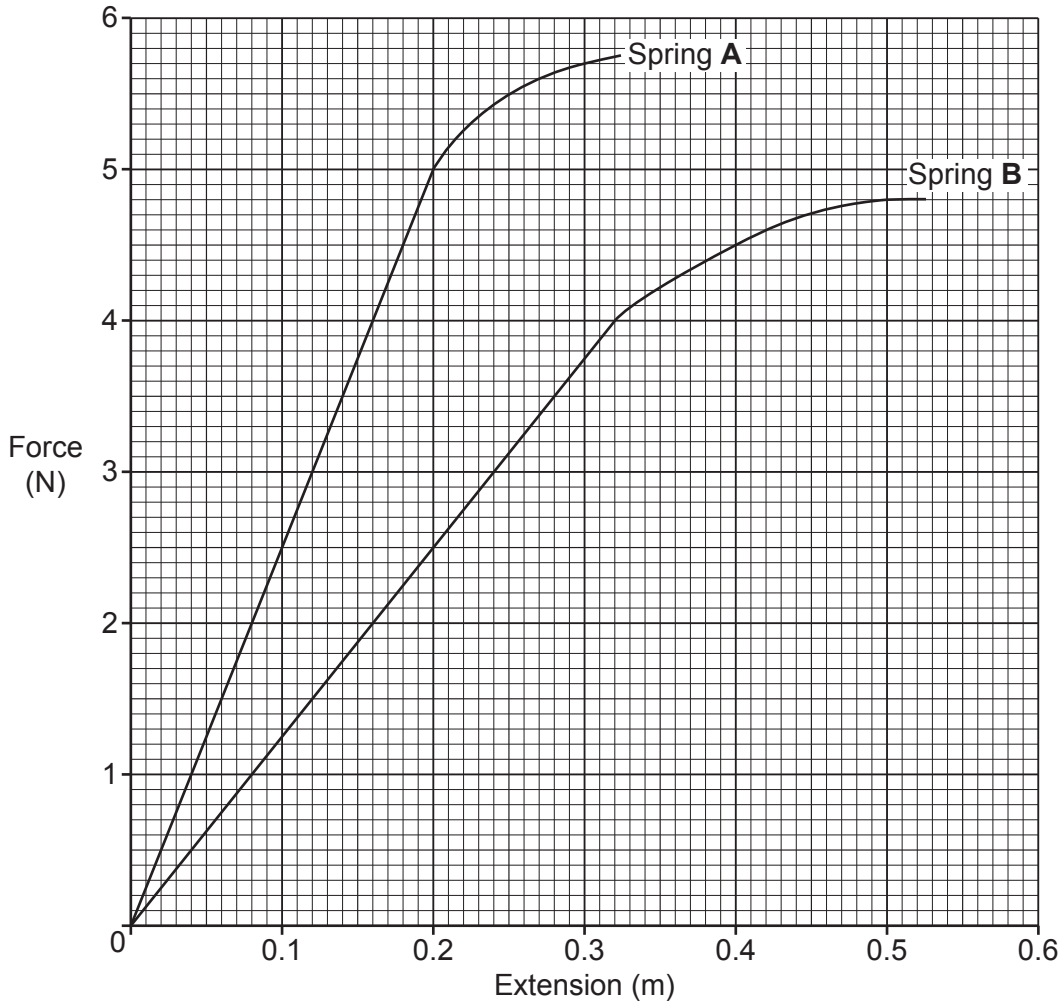

© OCR 2021

Describe and explain the behaviour of spring **A** and spring **B**.

Use data from the graph and calculations in your answer.

.....

.....

.....

.....

.....

.....

.....

.....

.....

.....

.....

..... **[6]**

© OCR 2021

20 A student places a wire near a magnet. The wire is connected in series to a cell and a switch, as shown in the diagram.

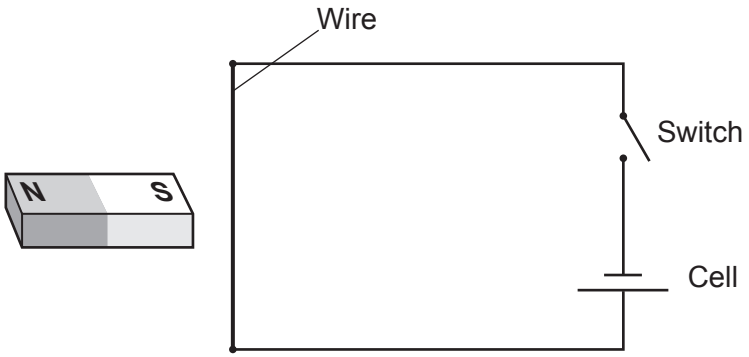

(a) Explain what will happen to the wire when the switch is closed.

.....

.....

..... **[2]**

(b) A wire of length 0.25 m experiences a force of 0.15 N when a current of 5.0 A flows.

Calculate the magnetic flux density of the field.

Use an equation from the data sheet to help you.

Magnetic flux density = ... T **[3]**

© OCR 2021

(c) The student looks at diagrams of a motor and a generator.

Motor

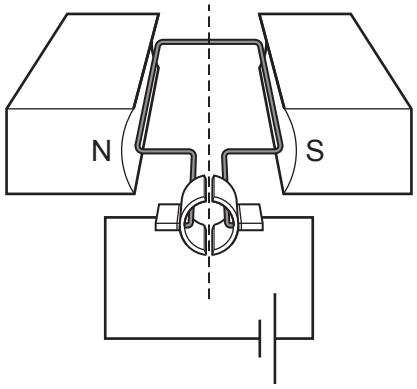

Generator

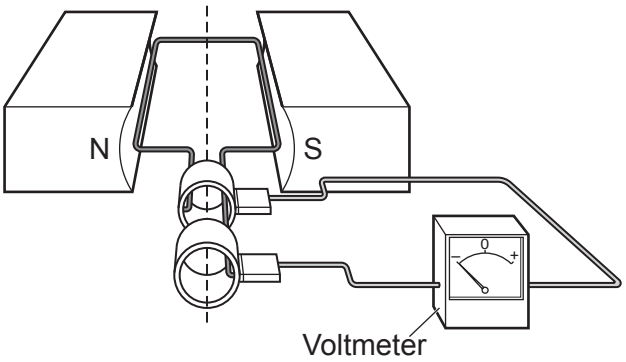

(i) Compare the similarities **and** differences of a motor and a generator. Include ideas about how they work.

.....

.....

.....

.....

.....

..... **[3]**

(ii) How does the output current of an alternator differ from that of a dynamo?

.....

.....

..... **[2]**

© OCR 2021

21 **(a)** A builder uses a lever to lift a rock.

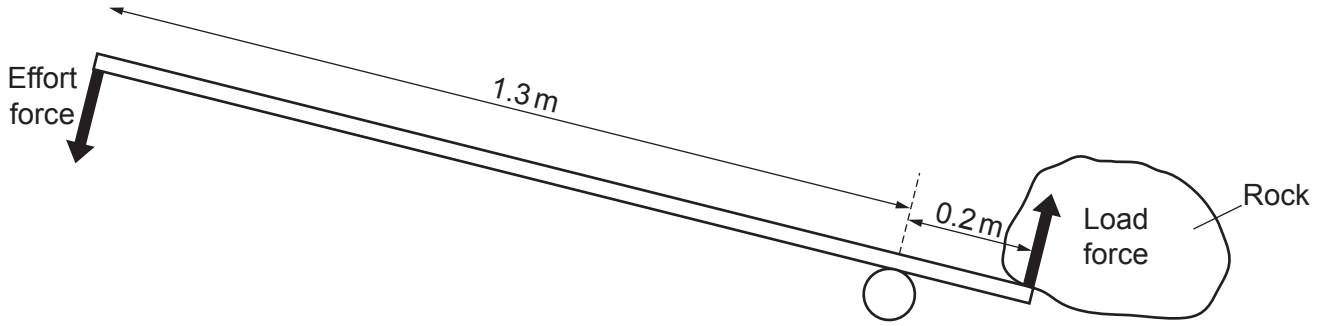

(i) Explain why the effort force needed to lift the rock is **less** than the load force.

.....

.....

..... **[2]**

(ii) The effort force needed to lift the rock is 100 N.

Calculate the load force.

Load force = ... N **[4]**

© OCR 2021

(b) The builder places a mug on a table.

(i) Describe the **two** forces in the interaction pair when the mug is placed on the table.

Force 1 .....

Force 2 .....

[2]

(ii) Draw and label the free body force diagram for the mug placed on the table.

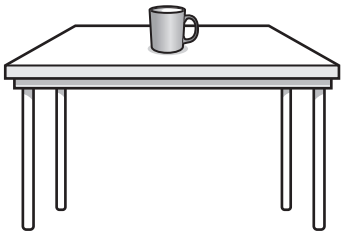

[3]

© OCR 2021

22 An athlete runs around a circular running track at a constant speed.

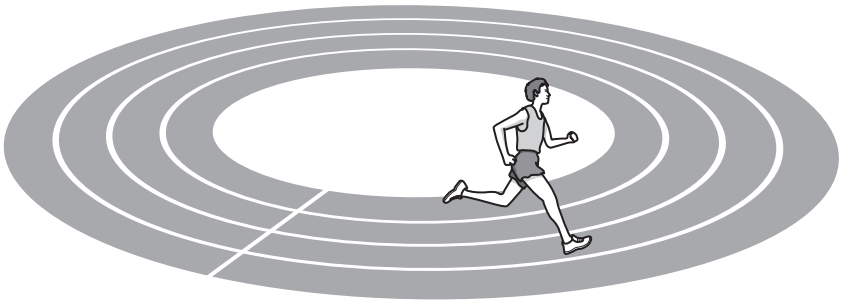

(a) Explain why the athlete's velocity is not constant.

.....

..... **[1]**

(b) The work done by the athlete after completing one lap of the track is 3000 J. It takes the athlete 60 s to complete one lap.

Calculate the power of the athlete.

Power = ... W **[3]**

(c) After the lap, the athlete slows down from a velocity of 5 m/s to a velocity of 1 m/s. The deceleration of the athlete is 0.4 m/s^2.

Calculate the time taken for the athlete to change velocity.

Use the equation: acceleration = change in velocity/time

Time taken = ... s **[3]**

© OCR 2021

23 **(a)** The air in a car tyre has a pressure of 200 kPa.

A driver notices that after a long journey the pressure in the tyre has increased. They think this is because the temperature of the tyre has increased.

Explain, in terms of molecules, why the pressure in the tyre has increased.

.....

.....

.....

.....

.....

.....

..... **[4]**

(b) A student writes down a simple model of the Earth's atmosphere.

Simple model of the Earth's atmosphere

- The atmosphere is a single layer of gas that covers the Earth.
- The density of the air is uniform.
- The thickness of the atmosphere is large compared to the diameter of the Earth.

The student has made **one** mistake in their work.

Identify the wrong word the student used and write the correct word needed to replace it.

Wrong word: .....

Correct word: .....

[2]

© OCR 2021

24 A student investigates how the electrical power of a component changes with current. They plot a graph of their results.

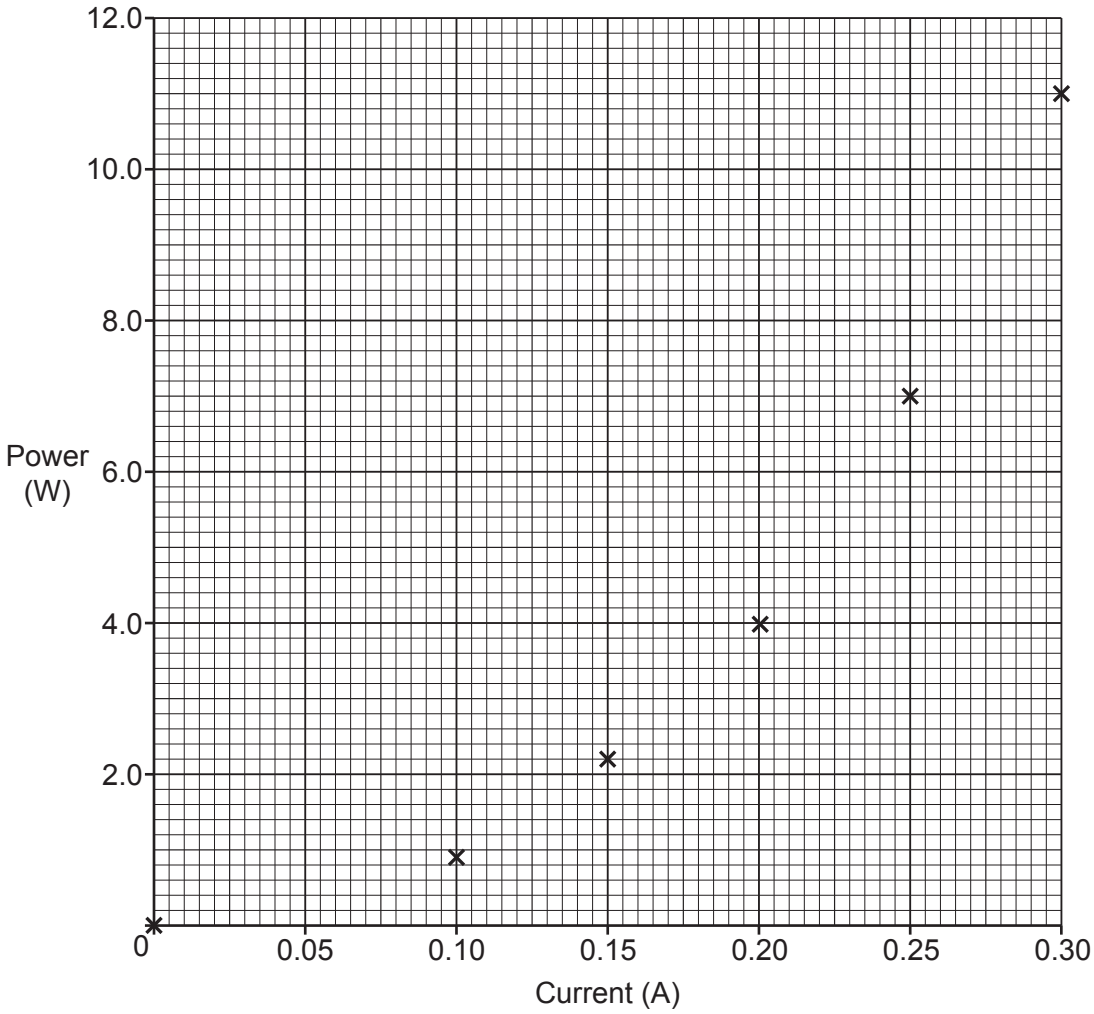

(a) Draw a line of best fit on the graph. **[1]**

(b) Use the graph to describe the relationship between current and power for the component.

.....

.....

..... **[2]**

(c) Use the graph to estimate the current when the power is 3.0 W.

Current = ... A **[1]**

© OCR 2021

(d) The student thinks that the resistance of the component increases as the current increases.

Use data from the graph to explain if the student is correct.

.....

.....

.....

.....

..... **[3]**

END OF QUESTION PAPER

© OCR 2021

ADDITIONAL ANSWER SPACE

If additional space is required, you should use the following lined page(s). The question number(s) must be clearly shown in the margin(s).

OCR
Oxford Cambridge and RSA

Copyright Information

OCR is committed to seeking permission to reproduce all third-party content that it uses in its assessment materials. OCR has attempted to identify and contact all copyright holders whose work is used in this paper. To avoid the issue of disclosure of answer-related information to candidates, all copyright acknowledgements are reproduced in the OCR Copyright Acknowledgements Booklet. This is produced for each series of examinations and is freely available to download from our public website (www.ocr.org.uk) after the live examination series.

If OCR has unwittingly failed to correctly acknowledge or clear any third-party content in this assessment material, OCR will be happy to correct its mistake at the earliest possible opportunity.

For queries or further information please contact The OCR Copyright Team, The Triangle Building, Shaftesbury Road, Cambridge CB2 8EA.

OCR is part of the Cambridge Assessment Group; Cambridge Assessment is the brand name of University of Cambridge Local Examinations Syndicate (UCLES), which is itself a department of the University of Cambridge.

© OCR 2021