Oxford Cambridge and RSA

Wednesday 22 May 2024 – Morning

GCSE (9–1) Physics A (Gateway Science)

J249/03 (Higher Tier)

Time allowed: 1 hour 45 minutes

You must have:
- a ruler (cm/mm)
- the Equation Sheet for GCSE (9–1) Physics A (inside this document)

You can use:
- a scientific or graphical calculator
- an HB pencil

H

Please write clearly in black ink. **Do not write in the barcodes.**

Centre number | | | | | | Candidate number | | | | |

First name(s) _____

Last name _____

INSTRUCTIONS
- Use black ink. You can use an HB pencil, but only for graphs and diagrams.
- Write your answer to each question in the space provided. If you need extra space use the lined page at the end of this booklet. The question numbers must be clearly shown.
- Answer **all** the questions.
- Where appropriate, your answer should be supported with working. Marks might be given for using a correct method, even if the answer is wrong.

INFORMATION
- The total mark for this paper is **90**.
- The marks for each question are shown in brackets **[ ]**.
- Quality of extended response will be assessed in questions marked with an asterisk (*).
- This document has **28** pages.

ADVICE
- Read each question carefully before you start your answer.

© OCR 2024 [601/8651/3]
DC (ST) 339828/7
OCR is an exempt Charity

Section A

You should spend a **maximum** of **30 minutes** on this section.

Write your answer to each question in the box provided.

1 A molecule is made up of 10 atoms in a row.

Which measurement is a typical size for this **molecule**?

A 1×10^{-15} m

B 1×10^{-13} m

C 1×10^{-11} m

D 1×10^{-9} m

Your answer ☐ **[1]**

2 A student holds a bar magnet above a paperclip. The paperclip is attracted to the bar magnet.

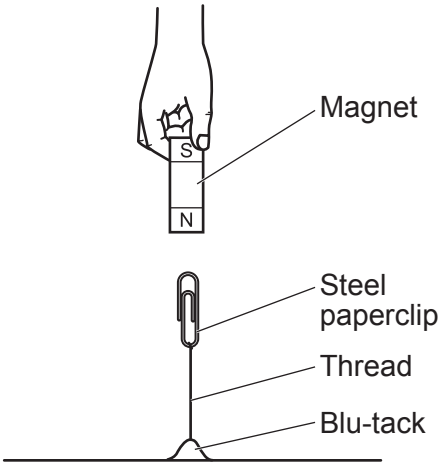

Which row of the table correctly describes the bar magnet and paperclip?

	Bar magnet	Paperclip
A	induced magnet	induced magnet
B	induced magnet	permanent magnet
C	permanent magnet	induced magnet
D	permanent magnet	permanent magnet

Your answer ☐ **[1]**

© OCR 2024

3 A student makes a circuit using five identical lamps.

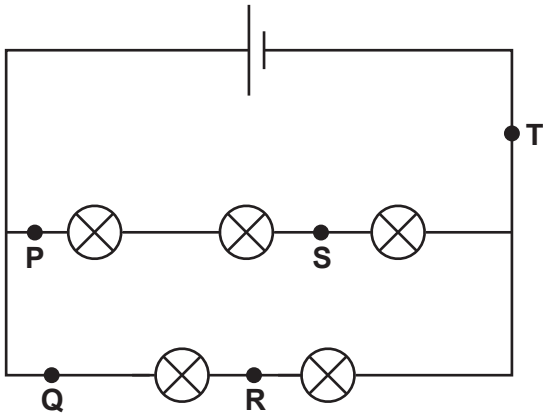

A current of 5A is measured at point **P**.

At which other point in the circuit is the current 5A?

A Point **Q**

B Point **R**

C Point **S**

D Point **T**

Your answer ☐ **[1]**

4 The arrows on these scale diagrams represent forces acting on an elastic band.

In which diagram will the elastic band stretch?

A

B

C

D

Your answer ☐ **[1]**

© OCR 2024

5 Which sentence about an atom is correct?

A Most of the mass is in the nucleus.

B The nuclear radius is much larger than the rest of the atom.

C The nucleus has a neutral charge.

D The nucleus is surrounded by positively charged electrons.

Your answer ☐ **[1]**

6 An object moves in a circular path at a constant speed.

Which description is correct?

A All of the forces acting on the object are balanced.

B The object moves with a constant velocity.

C The resultant force acts away from the centre of the circle.

D The resultant force acts towards the centre of the circle.

Your answer ☐ **[1]**

7 The arrows on these scale diagrams represent forces.

Which diagram shows the **largest** net force?

A

B

C

D

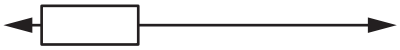

Your answer ☐ **[1]**

© OCR 2024

8 Ice at 0 °C is heated until it turns into water at 25 °C. The mass of the ice is known.

Which extra information is needed to calculate the energy required for this change?

Use the Equation Sheet.

A Specific heat capacity of water and specific latent heat of fusion of ice

B Specific heat capacity of water and specific latent heat of vaporisation of water

C Specific heat capacity of water only

D Specific latent heat of fusion of ice and specific latent heat of vaporisation of water

Your answer ☐ **[1]**

9 In which circuit will both lamps light up?

A

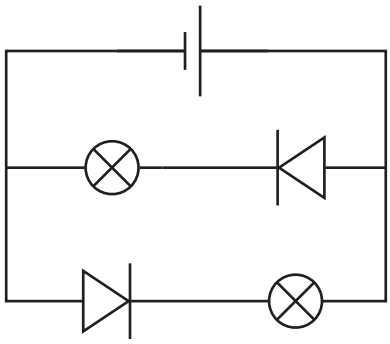

B

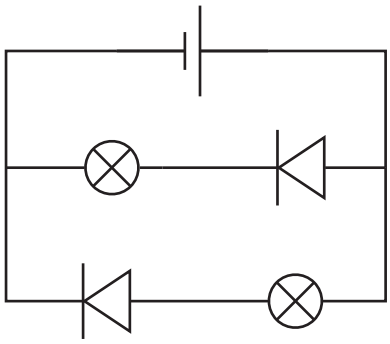

C

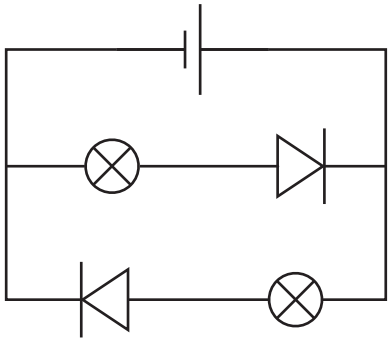

D

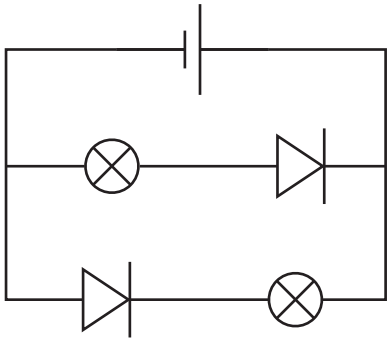

Your answer ☐ **[1]**

© OCR 2024

10 Which devices convert current variations in electrical circuits into pressure variations in sound waves?

A Loudspeakers and headphones

B Loudspeakers and microphones

C Microphones and headphones

D Microphones only

Your answer ☐ **[1]**

11 A large rock on the dwarf planet Pluto has a mass of 200 kg and a weight of 124 N.

What is the gravitational field strength on Pluto?

Use the Equation Sheet.

A 0.62 N / kg

B 1.61 N / kg

C 76 N / kg

D 24 800 N / kg

Your answer ☐ **[1]**

12 Which statement describes a **simple** model of the Earth's atmosphere?

A It covers the Earth to a height of about 700 km and is of uniform density.

B It covers the Earth to a height of about 700 km and its density increases as the distance from the Earth increases.

C It covers the Earth to a height of about 700 m and is of uniform density.

D It covers the Earth to a height of about 700 m and its density increases as the distance from the Earth increases.

Your answer ☐ **[1]**

© OCR 2024

13 Which change of state releases energy?

A Condensing

B Evaporating

C Melting

D Sublimating

Your answer ☐ **[1]**

14 A train accelerates from 20 m / s to 40 m / s in a distance of 1200 m.

What is the acceleration of the train?

Use the Equation Sheet.

A 0.17 m/s^2

B 0.50 m/s^2

C 0.67 m/s^2

D 1.0 m/s^2

Your answer ☐ **[1]**

15 Water has a density of 1000 kg/m^3.

Water of volume 1 m^3 is frozen. The volume of the ice formed is 1.09 m^3.

What is the density of the ice?

Use the Equation Sheet.

A 0.917 kg/m^3

B 1.09 kg/m^3

C 917 kg/m^3

D 1090 kg/m^3

Your answer ☐ **[1]**

© OCR 2024

Section B

16

(a) **Fig. 16.1** shows a (dipping) compass used in schools.

It is currently showing the reading for the UK.

Fig. 16.1

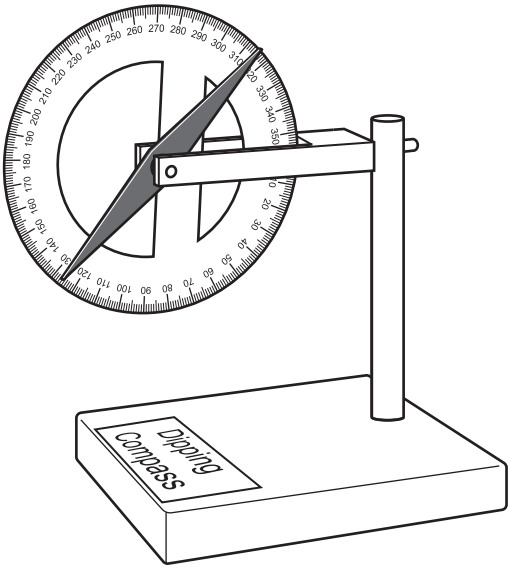

(i) Describe how the position of the needle changes if the compass is moved from the equator to the poles of the Earth.

.....

.....

.....

..... **[2]**

(ii) What does your answer to **(a)(i)** suggest about the Earth's core?

..... **[1]**

© OCR 2024

(b) **Fig. 16.2** shows the equipment a teacher sets up to demonstrate using a plotting compass to investigate the magnetic field around a current-carrying wire.

Fig. 16.2

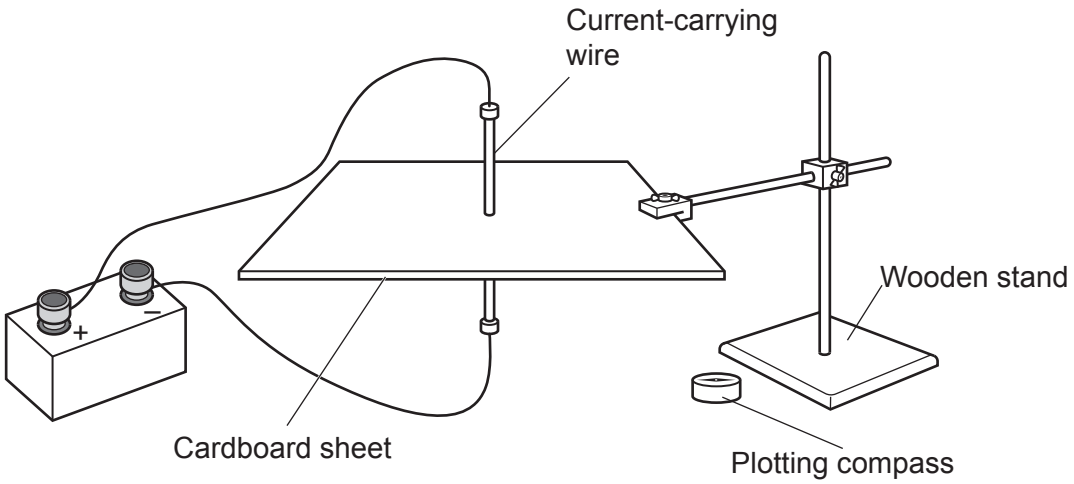

(i) Describe how the teacher uses this equipment to show the shape of the magnetic field around the current-carrying wire.

.....

.....

.....

.....

..... **[3]**

(ii) On **Fig. 16.3** sketch the magnetic field around the current carrying wire.

Fig. 16.3

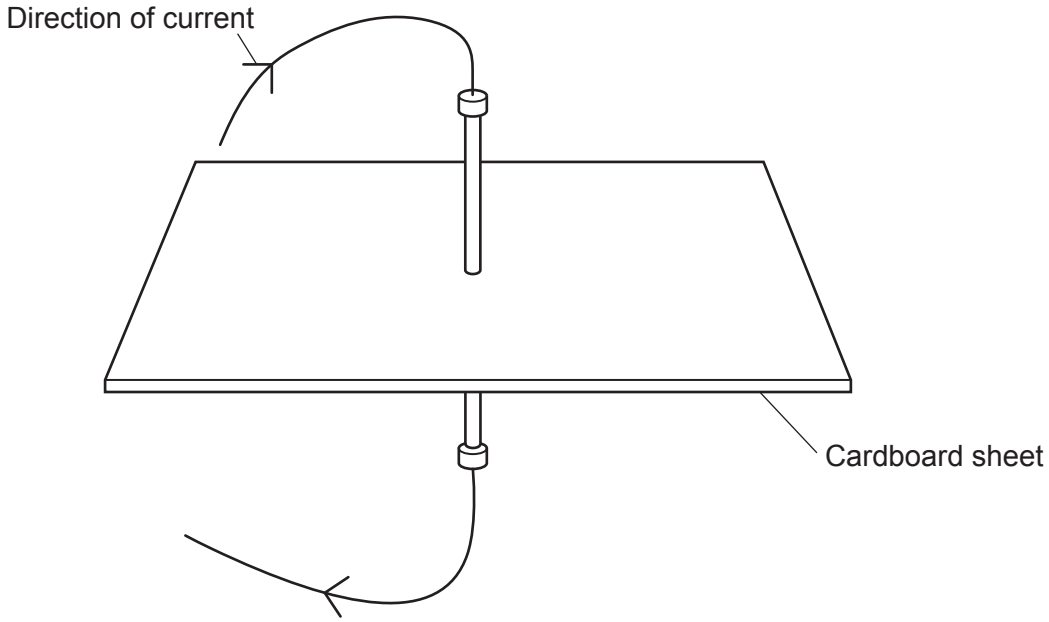

[2]

© OCR 2024

17 An engineer investigates the properties of a spring.

This is their method:

- Carefully add different loads to the spring.
- Measure the extension of the spring for each load.
- Repeat the experiment three times for each load.

The table shows the engineer's results.

Load (N)	Extension (cm)			
	Test 1	**Test 2**	**Test 3**	**Mean**
100	2.1	2.2	2.2	
200	4.2	4.2	4.2	4.2
300	6.3	6.5	6.4	6.4
400	8.6	8.6	8.6	8.6
500	10.6	10.4	10.8	10.6

(a)
(i) Calculate the missing value of the mean extension for a load of 100 N to a suitable degree of accuracy.

Mean = ... cm **[1]**

© OCR 2024

(ii) Plot the missing value on the graph for a load of 100 N.

Draw a line of best fit.

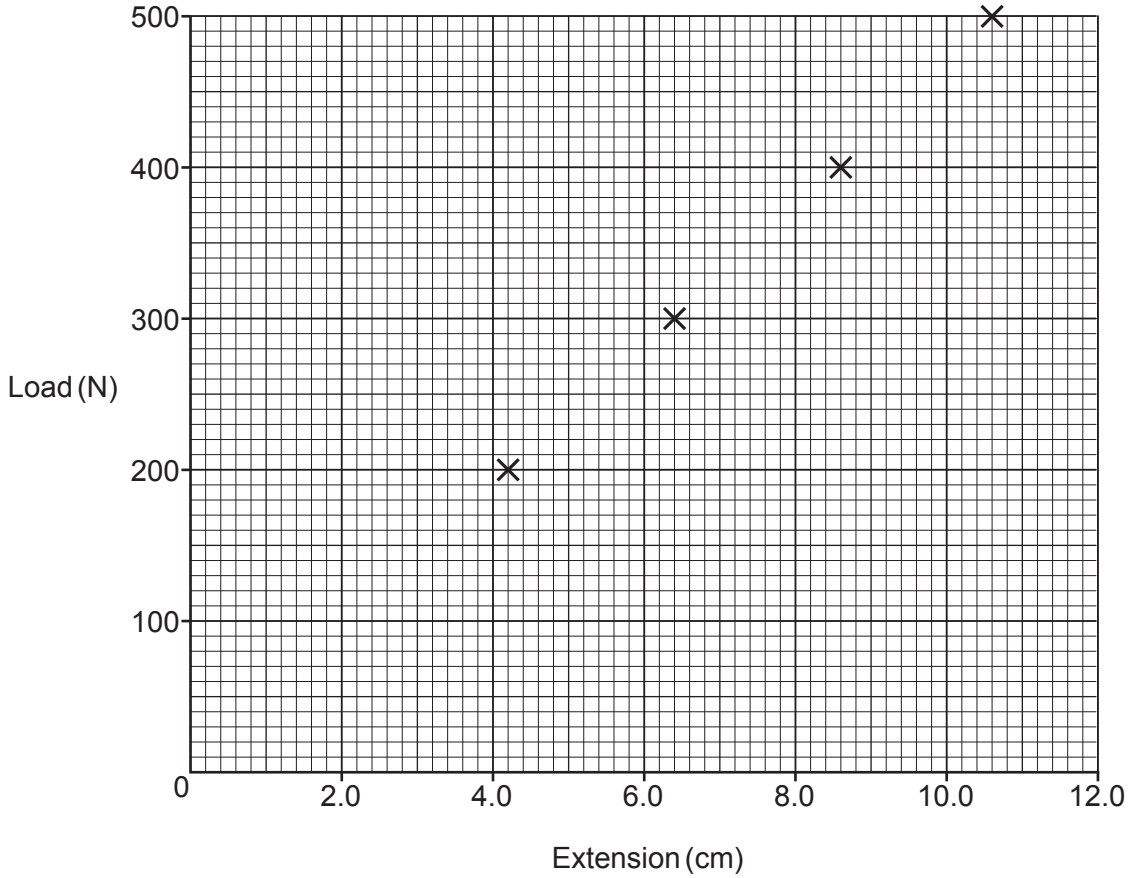

[2]

(iii) Calculate the gradient of the graph. Show your workings on the graph.

Gradient = ... N / cm **[2]**

(iv) Use your answer to **(a)(iii)** to determine the spring constant for the spring.

Spring constant = ... N / cm **[1]**

© OCR 2024

(b) When the engineer repeats the experiment, they use the same method and the same equipment.

The engineer says the results show that the experiment is reproducible.

Suggest **two** reasons why the engineer is **incorrect**.

1 .....

.....

2 .....

.....

[2]

(c) Identify **one** possible hazard for this experiment and the precaution the engineer should take.

Hazard .....

Precaution .....

.....

[2]

© OCR 2024

BLANK PAGE

PLEASE DO NOT WRITE ON THIS PAGE

© OCR 2024

18 This question is about electricity.

(a) The diagrams show the electric fields between different charges. The charges are the **same distance** apart in both electric fields.

Electric field **A**

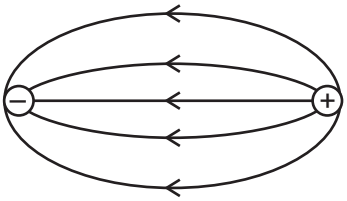

Electric field **B**

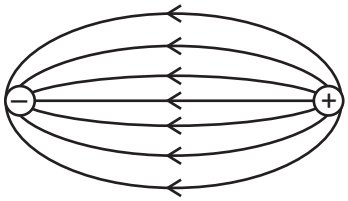

An identical charged particle is placed in each electric field.

Explain in which electric field, **A** or **B**, the particle experiences the **strongest** force.

.....

.....

..... **[2]**

(b) Which conditions are needed for charge to flow?

Tick (✓) **two** boxes.

closed circuit ☐

open circuit ☐

source of potential difference ☐

source of resistance ☐

[2]

© OCR 2024

(c) A student has written two sentences about the resistance of different electrical components.

> The resistance of a filament lamp is so high in one direction, that no current can pass through.
>
> The resistance of a thermistor changes as the light intensity changes.

The student has made **two** mistakes about the components.

Identify the mistakes and write the correct word or words to replace each of them.

Mistake 1 .....

Correct word(s) 1 .....

Mistake 2 .....

Correct word(s) 2 .....

[4]

(d) Calculate the current in a 180 W resistor when the potential difference across the resistor is 12 V.

Use the equation: power = potential difference × current

Current = ... A **[3]**

(e) Calculate the energy transferred when 20 C of charge moves through a potential difference of 12 V.

Use the equation sheet.

Energy transferred = ... J **[3]**

© OCR 2024

19* A student investigates how the surface area of a parachute affects the time taken for the parachute to fall.

The student drops parachutes with different surface areas from a height of approximately 2 m and records the time taken to fall using a stopwatch.

The diagram shows the parachutes used by the student.

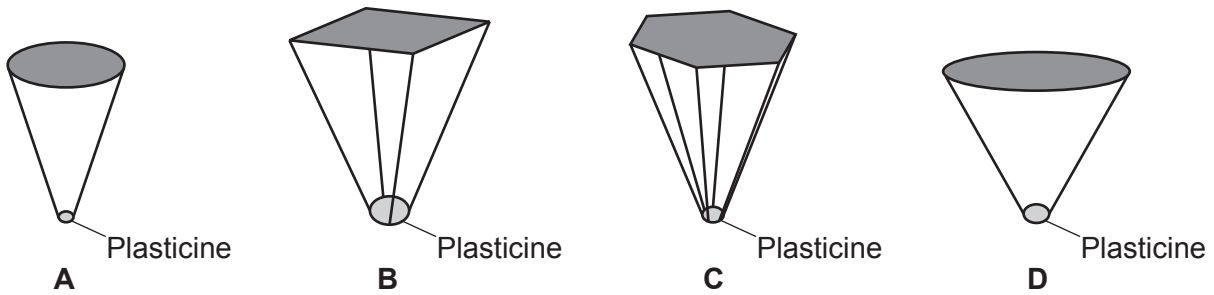

Not to scale

The table shows the data obtained from the experiment.

Parachute	Surface area of parachute (cm^2)	Time of fall (s)		
		Attempt 1	Attempt 2	Mean
A	10	0.84	1.04	0.94
B	15	1.02	1.18	1.1
C	20	1.09	1.11	1.1
D	30	1.2	1.3	1.25

© OCR 2024

Describe the trend shown in the student's results.

Explain how the experimental procedure could be improved.

.....

.....

.....

.....

.....

.....

.....

.....

.....

.....

.....

..... **[6]**

© OCR 2024

20

(a) A teacher connects a sealed syringe of gas with a moveable piston to a pressure gauge as shown in **Fig. 20.1**.

Fig. 20.1

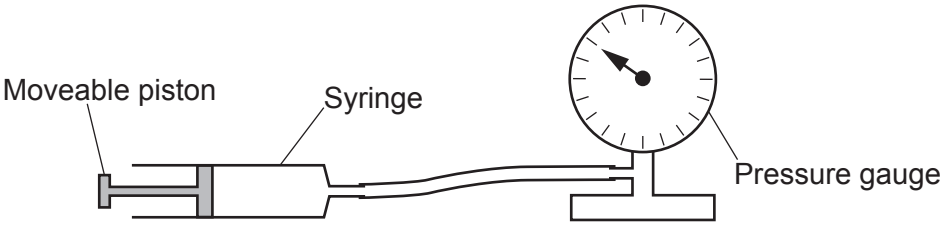

State **one** way the teacher can increase the reading on the pressure gauge.

..... **[1]**

(b)

(i) The teacher also has a gas enclosed in a container as shown in **Fig. 20.2**.

Fig. 20.2

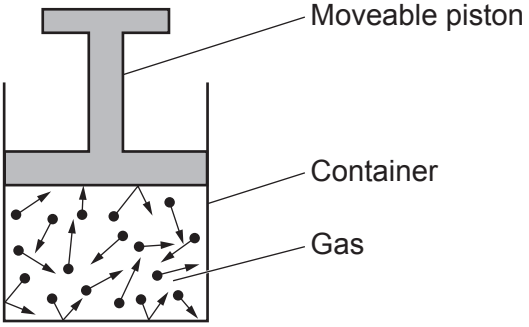

The teacher slowly moves the piston outwards until the gas has twice its original volume. The temperature of the gas is kept constant.

Explain how and why the pressure in the container changes.

.....

.....

.....

.....

.....

..... **[3]**

© OCR 2024

(ii) When the volume of a gas is $2.4 \times 10^{-4}\,m^3$, the pressure is $2.5 \times 10^4\,Pa$.

Calculate the volume when the pressure is $1.5 \times 10^5\,Pa$.

Use the Equation Sheet.

Volume = ... m^3 **[4]**

(c) Explain why a bicycle pump gets warmer when it is used to inflate a tyre.

.....

.....

.....

.....

..... **[3]**

© OCR 2024

21 A student investigates floating and sinking.

The student draws a bar chart to show the densities of five objects, **A**, **B**, **C**, **D** and **E**.

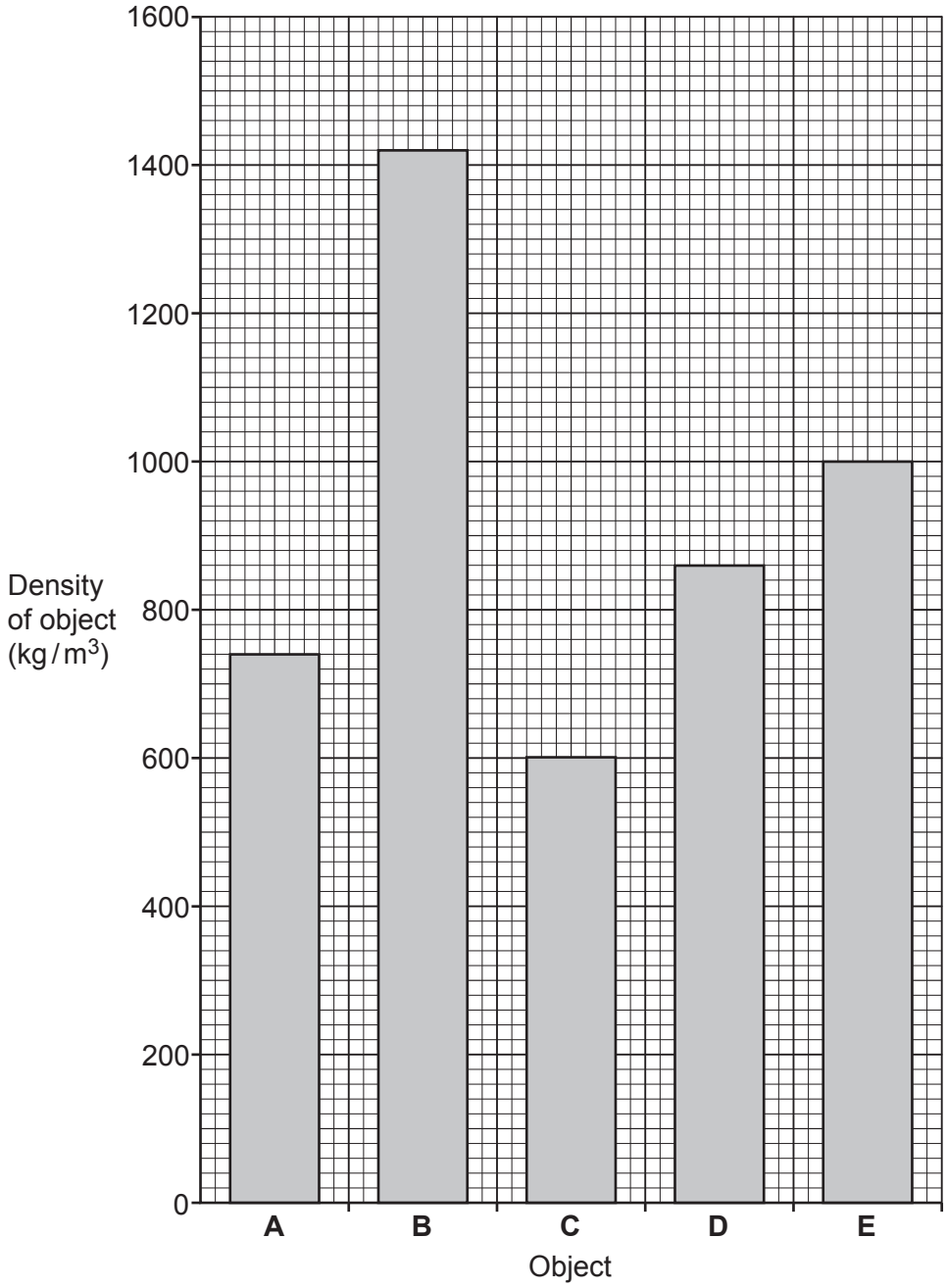

© OCR 2024

The student places the five objects into an unknown liquid and observes if each object floats or sinks.

- Objects **A** and **C** float.
- Objects **B**, **D** and **E** sink.

(a) Explain why some objects float and some objects sink in a liquid.

.....

.....

.....

..... **[2]**

(b) Use the bar chart to estimate the density of the liquid used.

Density = ... kg/m^3 **[1]**

(c) The student uses the internet to research the densities of five different liquids.

Liquid	**Density (kg/m^3)**
Alcohol	800
Diesel	870
Vegetable oil	910
Dishwashing soap	1120
Treacle	1430

In which liquid would **all five** of the objects **A**, **B**, **C**, **D** and **E** float?

Liquid ..... **[1]**

© OCR 2024

(d) A swimmer in a pool dives from a depth of 0.5 m to a depth of 2.0 m.

Calculate the change in pressure the swimmer experiences.

Use the Equation Sheet.

Gravitational field strength = 10 N / kg

Density of water = 1000 kg / m^3

Change in pressure = ... Pa **[2]**

© OCR 2024

BLANK PAGE

PLEASE DO NOT WRITE ON THIS PAGE

© OCR 2024

22

(a) **Fig. 22.1** shows a diagram of a simple electric motor.

Fig. 22.1

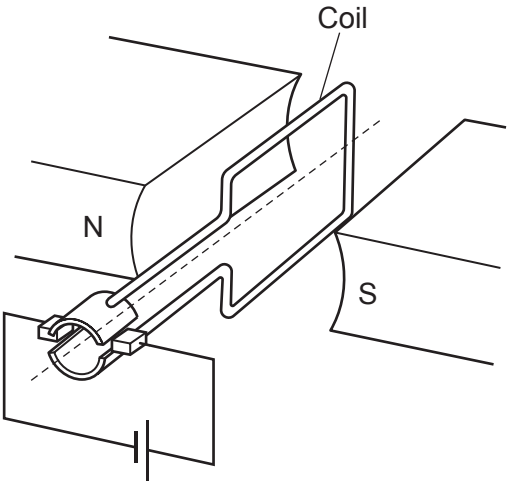

Explain why the coil rotates when a current passes through it.

.....

.....

..... **[2]**

(b)

(i) **Fig. 22.2** shows a diagram of a dynamo and **Fig. 22.3** shows a diagram of an alternator.

Describe **two similarities** and **two differences** between how these devices work.

Fig. 22.2

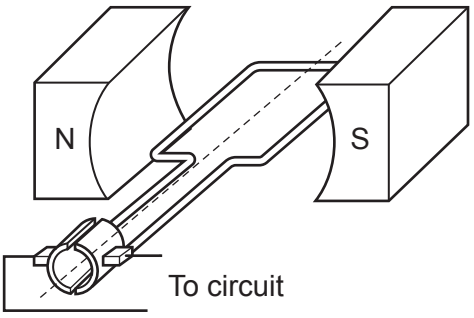

Fig. 22.3

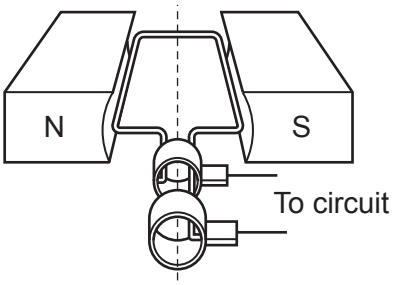

Similarities

1 .....

2 .....

Differences

1 .....

2 .....

[4]

© OCR 2024

(ii) Suggest **one** way to increase the output of these devices.

..... **[1]**

(c) A conductor in a magnetic field of magnetic flux density 1.5 T experiences a force of 0.81 N.

The current in the conductor is 1.2 A.

Calculate the length of the conductor.

Use the Equation Sheet.

Length = ... m **[3]**

© OCR 2024

23 A badminton player investigates how the velocity of a shuttlecock varies as it falls vertically to the ground.

The player drops the shuttlecock and records the velocity of the shuttlecock as it falls.

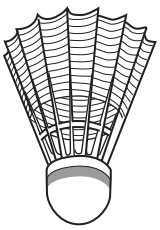

A shuttlecock

The graph shows their results.

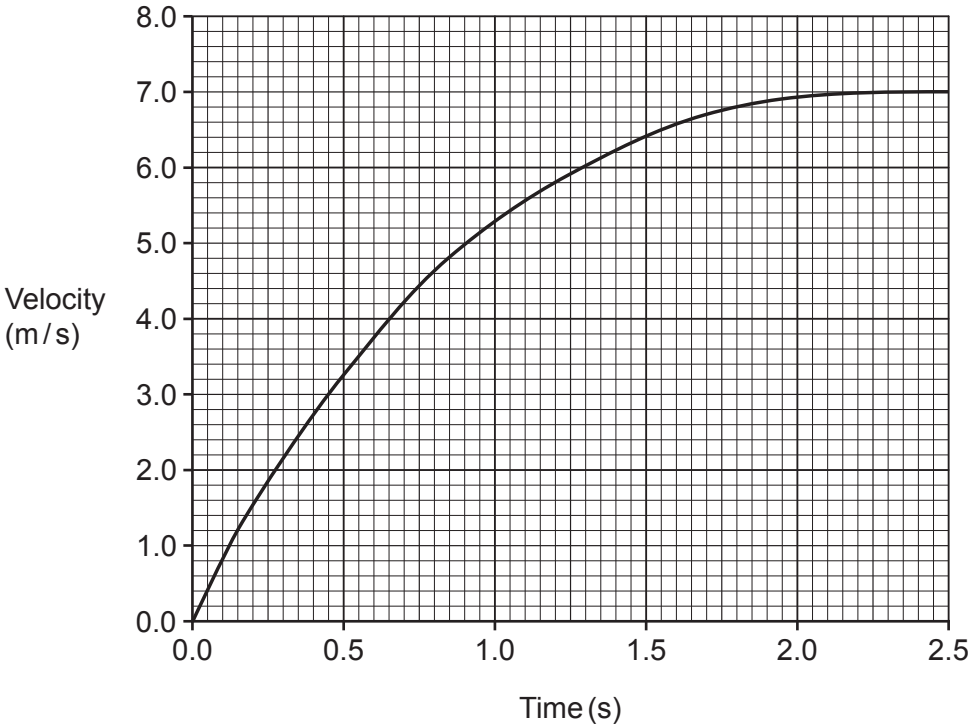

(a) Explain why the shuttlecock reaches a maximum velocity.

.....

.....

.....

.....

.....

..... **[3]**

© OCR 2024

(b) The gradient of a tangent drawn to the curved line of the graph gives the acceleration of the shuttlecock at that time.

Draw a tangent to the curved line at 1.0 s.

Use this tangent to find the acceleration of the shuttlecock at 1.0 s.

Acceleration = ... m/s^2 **[4]**

(c) Use the graph to find the approximate distance travelled by the shuttlecock during the 2.5 s of the experiment.

Distance = ... m **[3]**

END OF QUESTION PAPER

© OCR 2024

EXTRA ANSWER SPACE

If you need extra space use this lined page. You must write the question numbers clearly in the margin.

OCR
Oxford Cambridge and RSA

Copyright Information

OCR is committed to seeking permission to reproduce all third-party content that it uses in its assessment materials. OCR has attempted to identify and contact all copyright holders whose work is used in this paper. To avoid the issue of disclosure of answer-related information to candidates, all copyright acknowledgements are reproduced in the OCR Copyright Acknowledgements Booklet. This is produced for each series of examinations and is freely available to download from our public website (www.ocr.org.uk) after the live examination series.

If OCR has unwittingly failed to correctly acknowledge or clear any third-party content in this assessment material, OCR will be happy to correct its mistake at the earliest possible opportunity.

For queries or further information please contact The OCR Copyright Team, The Triangle Building, Shaftesbury Road, Cambridge CB2 8EA.

OCR is part of Cambridge University Press & Assessment, which is itself a department of the University of Cambridge.

© OCR 2024