Oxford Cambridge and RSA

Friday 14 June 2024 – Afternoon

GCSE (9–1) Physics A (Gateway Science)

J249/02 (Foundation Tier)

Time allowed: 1 hour 45 minutes

You must have:
- a ruler (cm/mm)
- the Equation Sheet for GCSE (9–1) Physics A (inside this document)

You can use:
- a scientific or graphical calculator
- an HB pencil

F

Please write clearly in black ink. **Do not write in the barcodes.**

Centre number | | | | | | Candidate number | | | | |

First name(s) _____

Last name _____

INSTRUCTIONS
- Use black ink. You can use an HB pencil, but only for graphs and diagrams.
- Write your answer to each question in the space provided. If you need extra space use the lined pages at the end of this booklet. The question numbers must be clearly shown.
- Answer **all** the questions.
- Where appropriate, your answer should be supported with working. Marks might be given for using a correct method, even if your answer is wrong.

INFORMATION
- The total mark for this paper is **90**.
- The marks for each question are shown in brackets **[ ]**.
- Quality of extended response will be assessed in questions marked with an asterisk (*).
- This document has **32** pages.

ADVICE
- Read each question carefully before you start your answer.

© OCR 2024 [601/8651/3]
DC (SL/CGW) 342895/6
OCR is an exempt Charity

Section A

You should spend a **maximum** of **30 minutes** on this section.

Write your answer to each question in the box provided.

1 Which statement describes the nucleus of an atom?

A It contains electrons and protons only.

B It contains neutrons only.

C It contains protons and neutrons only.

D It contains protons, neutrons and electrons.

Your answer ☐ **[1]**

2 The diagram shows an object in orbit around the Earth.

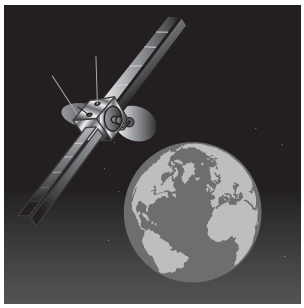

not to scale

What is the name of the object?

A A moon

B A natural satellite

C An artificial satellite

D An asteroid

Your answer ☐ **[1]**

© OCR 2024

3 One atom of carbon contains 6 protons, 6 electrons and 6 neutrons.

Another atom of carbon contains 6 protons, 6 electrons and 7 neutrons.

Which answer describes these different atoms of carbon?

A Alpha particles

B Ions

C Isotopes

D Nuclei

Your answer ☐ **[1]**

4 The graph shows how the velocity of a car changes when the driver sees a hazard in the road at time = 0 seconds.

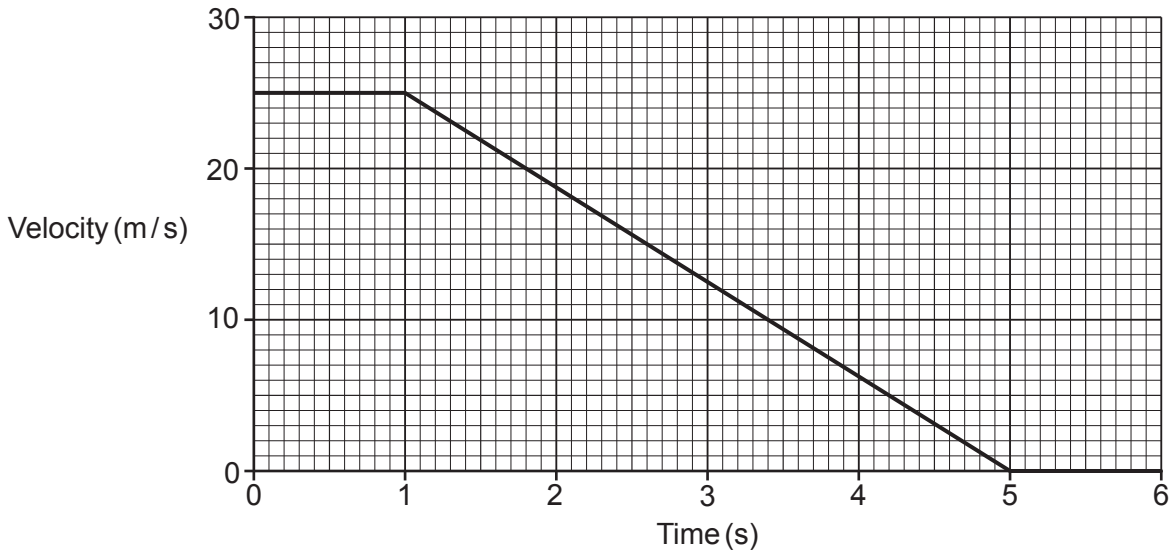

Which statement is correct?

A The driver brakes for 1 second.

B The driver brakes for 5 seconds.

C The driver takes 1 second to react.

D The driver takes 5 seconds to react.

Your answer ☐ **[1]**

© OCR 2024

5 Which ray diagram correctly shows rays of light passing through a lens with principal focus F?

A

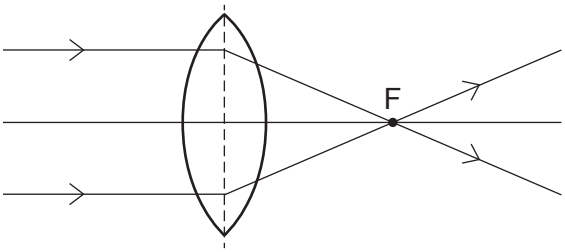

B

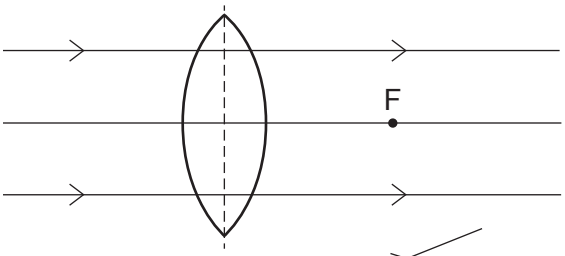

C

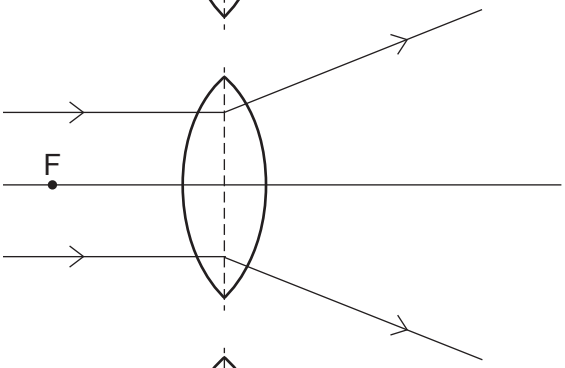

D

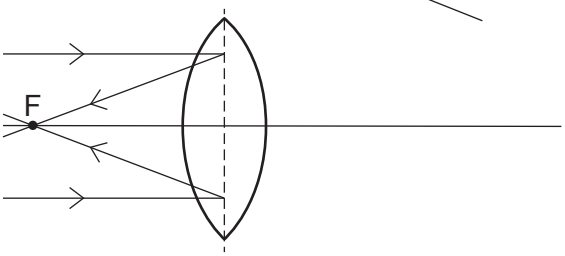

Your answer ☐ **[1]**

© OCR 2024

6 Which statement about some typical values of speed is correct?

A The speed of a car is greater than the speed of a jet plane flying.

B The speed of a car is greater than the speed of sound in air.

C The speed of a runner is greater than the speed of a jet plane flying.

D The speed of sound in air is greater than the speed of the wind.

Your answer ☐ **[1]**

© OCR 2024

7 Which diagram shows how alpha particles (α), beta particles (β) and gamma rays (γ) penetrate different materials?

A

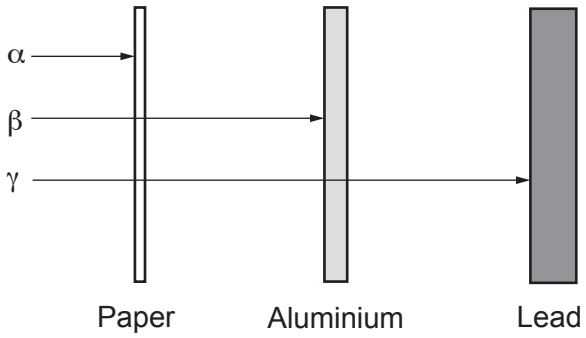

B

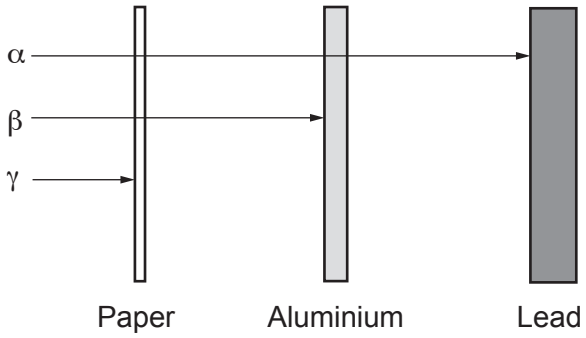

C

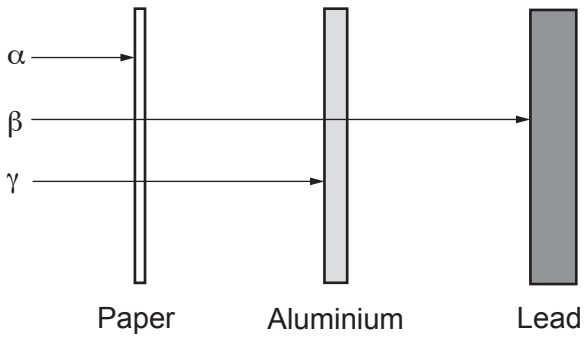

D

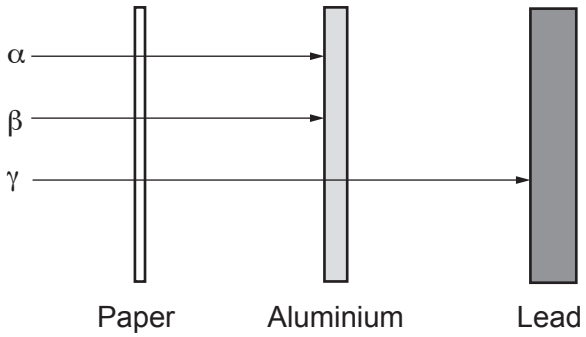

Your answer ☐ **[1]**

© OCR 2024

8 What happens in the process of nuclear fusion?

A A chain reaction starts.

B A heavy nucleus splits and releases energy.

C A uranium nucleus absorbs a neutron.

D Light nuclei join to form a heavier nucleus.

Your answer ☐ **[1]**

9 A shirt appears green in white light.

Which colour will the shirt appear in **red** light?

A Black

B Blue

C Green

D Red

Your answer ☐ **[1]**

10 Which statement about electromagnetic waves in air is **always** correct?

A High frequency waves have a higher velocity than low frequency waves.

B High frequency waves have a longer wavelength than low frequency waves.

C Low frequency waves have a longer wavelength than high frequency waves.

D Low frequency waves have a lower amplitude than high frequency waves.

Your answer ☐ **[1]**

© OCR 2024

11 The graph shows the electromagnetic radiation emitted by four objects at different temperatures.

Which object has the **highest** temperature?

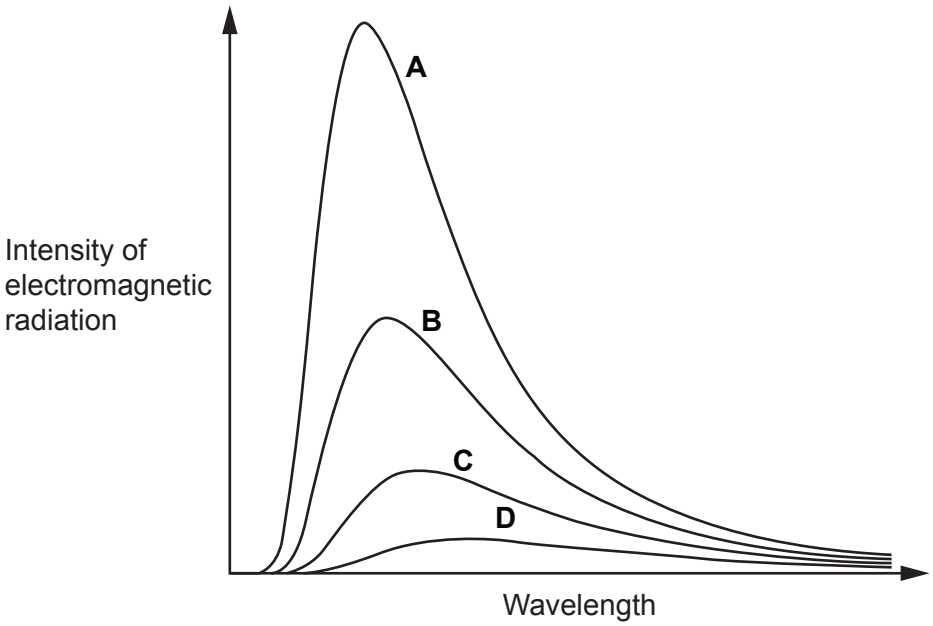

Your answer ☐ **[1]**

12 A book is lifted a vertical distance, x, from the floor to a table.

The gravitational potential energy store of the book increases by 10 J.

The book is then lifted a further vertical distance, x, from the table onto a shelf.

What is the **total** increase in the gravitational potential energy store of the book when it is lifted from the floor to the shelf?

A 5 J

B 10 J

C 20 J

D 40 J

Your answer ☐ **[1]**

© OCR 2024

13 An electrician measures the potential difference (p.d.) between two different wires, **X** and **Y**, in a plug.

The plug is wired correctly and working safely.

The p.d. between wire **X** and wire **Y** is 0 V.

Which row shows the correct name of wire **X** and wire **Y**?

	Wire X	**Wire Y**
A	earth	live
B	earth	neutral
C	live	earth
D	live	neutral

Your answer ☐ **[1]**

14 A force of 1200 N moves an object a distance of 16 m.

What is the work done on the object?

Use the equation: work done = force × distance

A 75 J

B 9600 J

C 19 200 J

D 153 600 J

Your answer ☐ **[1]**

15 Which row describes the potential difference for a washing machine and for a battery-operated torch?

	Washing machine	**Torch**
A	6 V a.c.	6 V a.c.
B	6 V d.c.	230 V d.c.
C	230 V a.c.	230 V d.c.
D	230 V a.c.	6 V d.c.

Your answer ☐ **[1]**

© OCR 2024

Section B

16 This question is about waves.

(a) **Fig. 16.1** shows a diagram of a sound wave travelling through air.

Fig. 16.1

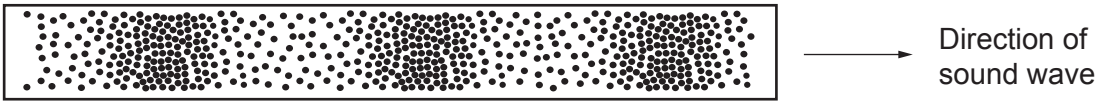

The dots in the diagram represent air particles.

(i) Which type of wave is a sound wave?

Put a (ring) around the correct answer.

electromagnetic **longitudinal** **radio** **transverse**

[1]

(ii) **Fig. 16.2** shows four diagrams of the air particles after the sound wave has passed.

Which diagram is correct?

Tick (✓) **one** box.

Fig. 16.2

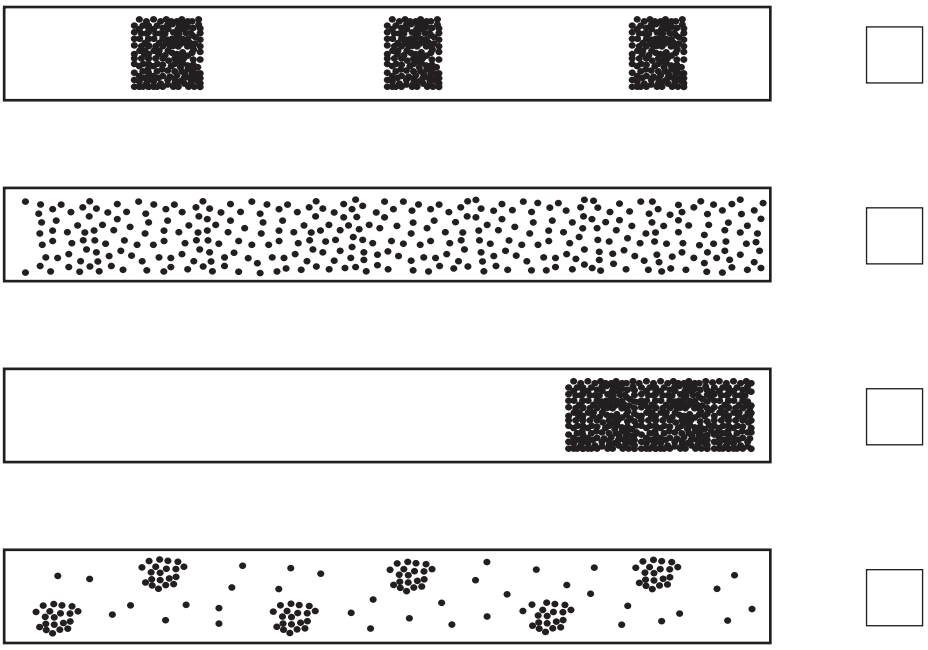

[1]

© OCR 2024

(b) Complete the sentences to describe what happens to the properties of a sound wave as it travels **from** air **into** water.

Use words from the list.

decreases	**increases**	**stays the same**

The frequency of the sound wave ..... .

The velocity of the sound wave ..... .

The wavelength of the sound wave ..... .

[2]

(c) The lists show two groups of words about waves: a **start** of a sentence and an **end** of a sentence.

Draw **one** line from each **start** of the sentence to the matching **end** of the sentence.

Start	**End**
Amplitude	is an electromagnetic wave.
Light	is the maximum displacement of a wave.
Wavelength	is the distance between one wave peak and the next wave peak.

[2]

© OCR 2024

(d) **Fig. 16.3** shows how ultrasound pulses can be used to find distances in water.

Fig. 16.3

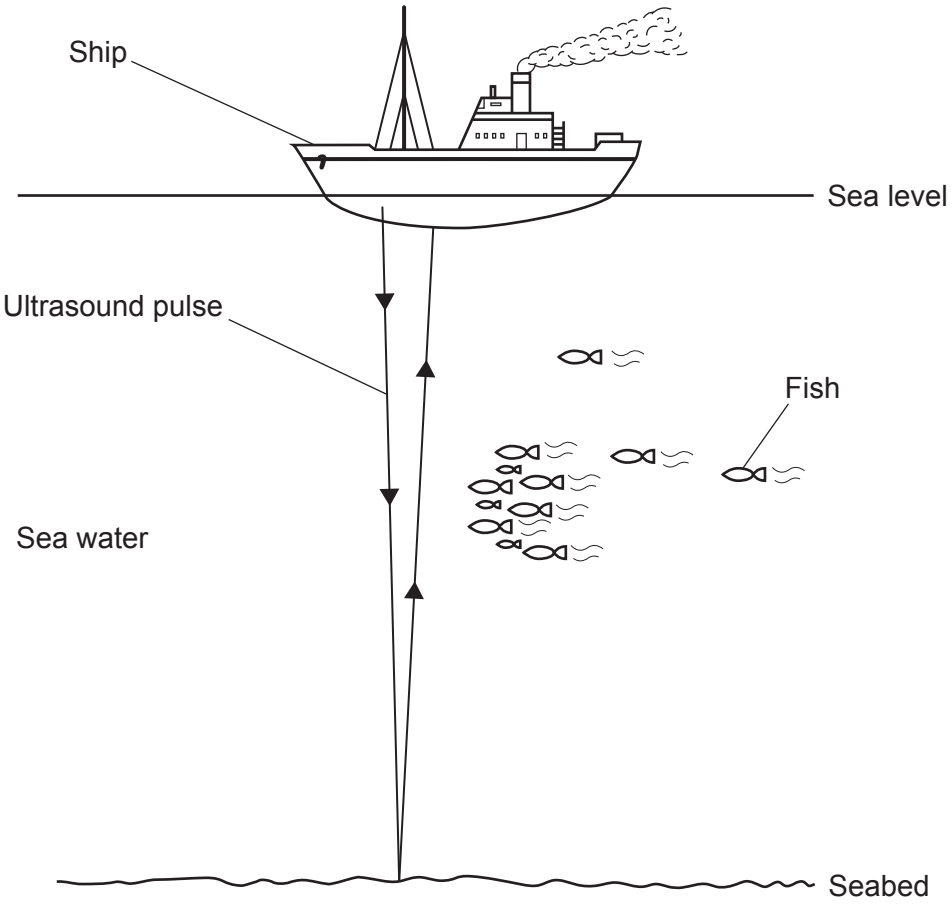

(i) Sometimes more than one echo is received by the ship from each ultrasound pulse.

Suggest why.

.....

..... **[1]**

(ii) An ultrasound pulse takes 0.60 s to travel to the seabed and back to the ship.

The speed of ultrasound in sea water is 1500 m / s.

Calculate the distance from the ship to the seabed.

Use the equation: distance travelled = speed × time

Distance to the seabed = ... m **[3]**

© OCR 2024

(e) A sound wave has a frequency of 500 Hz.

The speed of sound in air is 330 m / s.

Calculate the wavelength of the sound wave.

Use the equation: wave speed = frequency × wavelength

Wavelength = ... m **[3]**

© OCR 2024

17 Since 2009, filament lamps in the home have often been replaced by other lamps, called LED lamps.

The table compares a filament lamp and an LED lamp which produce the **same** intensity of light.

	Filament lamp	**LED lamp**
Power	60 W	0.01 kW
Lifetime	2000 hours	26 000 hours
Cost to buy	£1.00	£5.00
Cost to run over 1 year	£22.00	£3.65
Dimmable	Yes	No
Structure	Glass	Plastic

(a) State the power of the filament lamp in kW.

..... kW **[1]**

(b) Calculate the energy transferred by the LED lamp during its lifetime.

Use the equation: energy transferred = power × time

Give your answer in kW h.

Energy transferred = ... kW h **[2]**

(c) In 1 year, the filament lamp transfers 110 kW h of energy.

This costs £22.00.

What is the cost of 1 kW h of electricity?

Cost = £ ..... **[1]**

© OCR 2024

(d) Calculate the number of filament lamps a person must buy during the lifetime of **one** LED lamp.

Number of filament lamps = ... **[1]**

(e) Suggest **one** reason **for** and **one** reason **against** using LED lamps.

Use the data in the table.

For .....

.....

Against .....

.....
[2]

(f) One LED lamp has an efficiency of 0.4.

In one second, the input energy transferred by the lamp is 10 J.

Calculate the energy **wasted** by the lamp in one second.

Use the equation: efficiency = $\frac{\text{useful output energy transfer}}{\text{input energy transfer}}$

Energy wasted = ... J **[3]**

© OCR 2024

(g) The graph shows how the total cost of buying and using each lamp varies with the number of days each lamp is used.

Key:

——— LED lamp

- - - - - Filament lamp

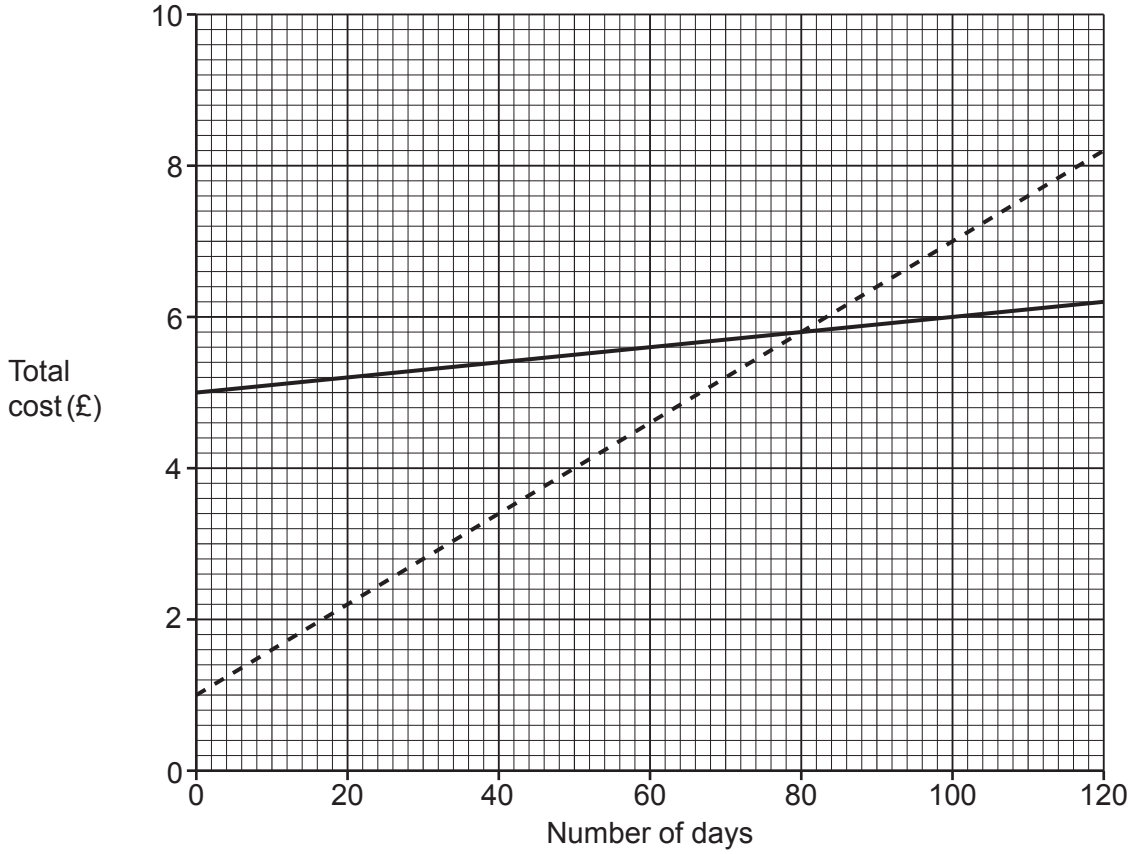

(i) A person buys an LED lamp.

After how many days is the total cost of the LED lamp the same as the total cost of the filament lamp?

Use the graph.

Number of days = ... days **[1]**

© OCR 2024

(ii) The person uses the LED lamp for 100 days.

How much money does the person save by buying and using the LED lamp instead of the filament lamp?

Use the graph.

Money saved = £ ..... **[2]**

© OCR 2024

18

(a) A student draws a ray diagram to show the refraction of a light ray through a glass block.

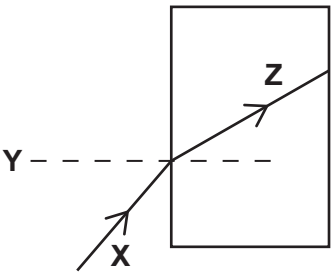

X is the incident ray. What are the names of line **Y** and line **Z**?

Y .....

Z .....

[1]

(b)* The student does an experiment to investigate the reflection of light from a plane mirror.

The diagram shows the equipment the student uses.

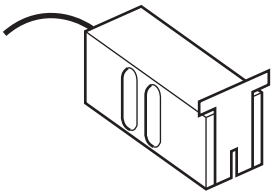

Ray box with one slit

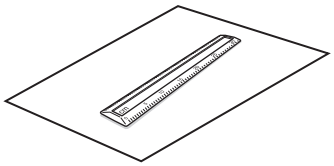

Ruler and paper

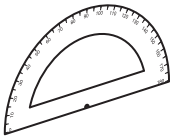

Protractor

Plane mirror

Describe how the student does the experiment.

In your answer include:
- how the student sets up the equipment
- what the student will measure
- a prediction of what the student will find out from their results.

You can draw a labelled diagram to support your answer.

© OCR 2024

.....

.....

.....

.....

.....

.....

.....

.....

.....

.....

.....

..... **[6]**

© OCR 2024

19

(a) Hydrogen gas is placed in a glass tube in a laboratory.

Fig. 19.1 shows the emission spectrum of hydrogen.

Each line in the emission spectrum has a different colour.

Fig. 19.1

(i) Complete the sentences to explain the cause of the lines in the emission spectrum.

Use words from the list.

atoms	**electrons**	**light**	**protons**	**sound**

..... move from a higher energy level to a lower energy level

and emit ..... . **[2]**

(ii) There is a potential difference of 3000 V across the tube.

A charge of 0.08 C flows in the tube.

Calculate the energy transferred.

Use the equation: energy transferred = charge × potential difference

Energy transferred = ... J **[2]**

(iii) A special power supply is needed to provide the high potential difference of 3000 V.

Describe **one** risk of using this power supply.

.....

..... **[1]**

© OCR 2024

(b) **Fig. 19.2** shows the emission spectrum for each of three different galaxies.

The same emission spectrum is also shown for an equivalent laboratory source on the Earth.

Fig. 19.2

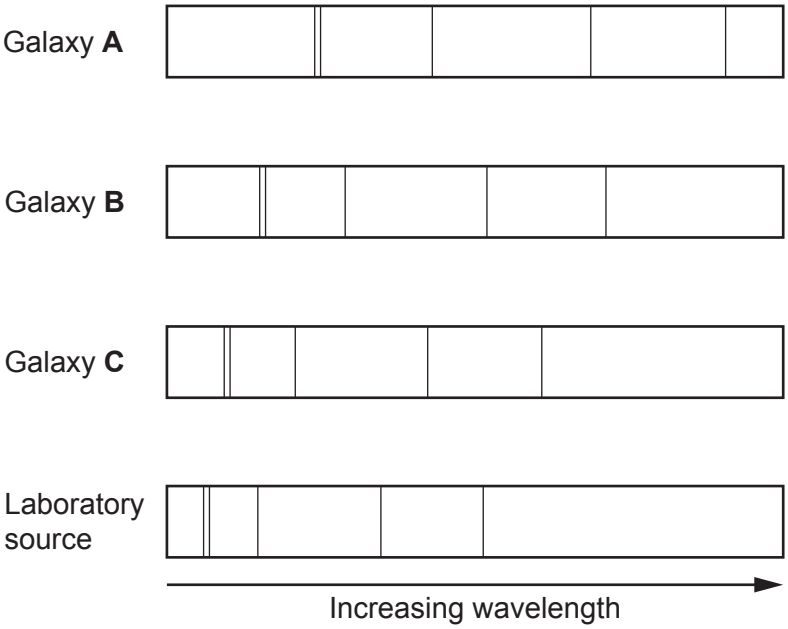

(i) The emission spectrum for each galaxy shows red-shift.

Use **Fig. 19.2** to explain what is meant by the term **red-shift**.

.....

..... **[1]**

(ii) Which galaxy in **Fig. 19.2** is furthest from the Earth?

Give a reason for your answer.

Galaxy .....

Reason .....

.....

[2]

(iii) State which theory the spectra from each galaxy in **Fig. 19.2** gives evidence for.

..... **[1]**

© OCR 2024

20 This question is about the acceleration and deceleration of cars.

(a) A student wants to estimate a typical value for the accelerating force on a car.

The student writes down **three** possible values for the car's acceleration.

3 m / s^2 **50 m / s^2** **100 m / s^2**

(i) Put a ring around the value the student should use as the car's acceleration. **[1]**

(ii) The car has a mass of 1800 kg.

Use the value for the acceleration you chose in **(a)(i)** to estimate the accelerating force on a car.

Use the equation: force = mass × acceleration

Force = ... N **[2]**

(b) In a crash, the change in velocity of a car is 18 m / s.

The time for the crash is 0.15 s.

Calculate the deceleration of the car.

Use the equation: acceleration = $\frac{\text{change in velocity}}{\text{time}}$

Deceleration = ... m / s^2 **[2]**

© OCR 2024

(c) In America, many cars have a ‘black box’ fitted.

The ‘black box’ records the change in velocity of the car if it crashes and comes to a stop.

The graph shows how the probability of serious injury to passengers in the car varies with the change in velocity of the car.

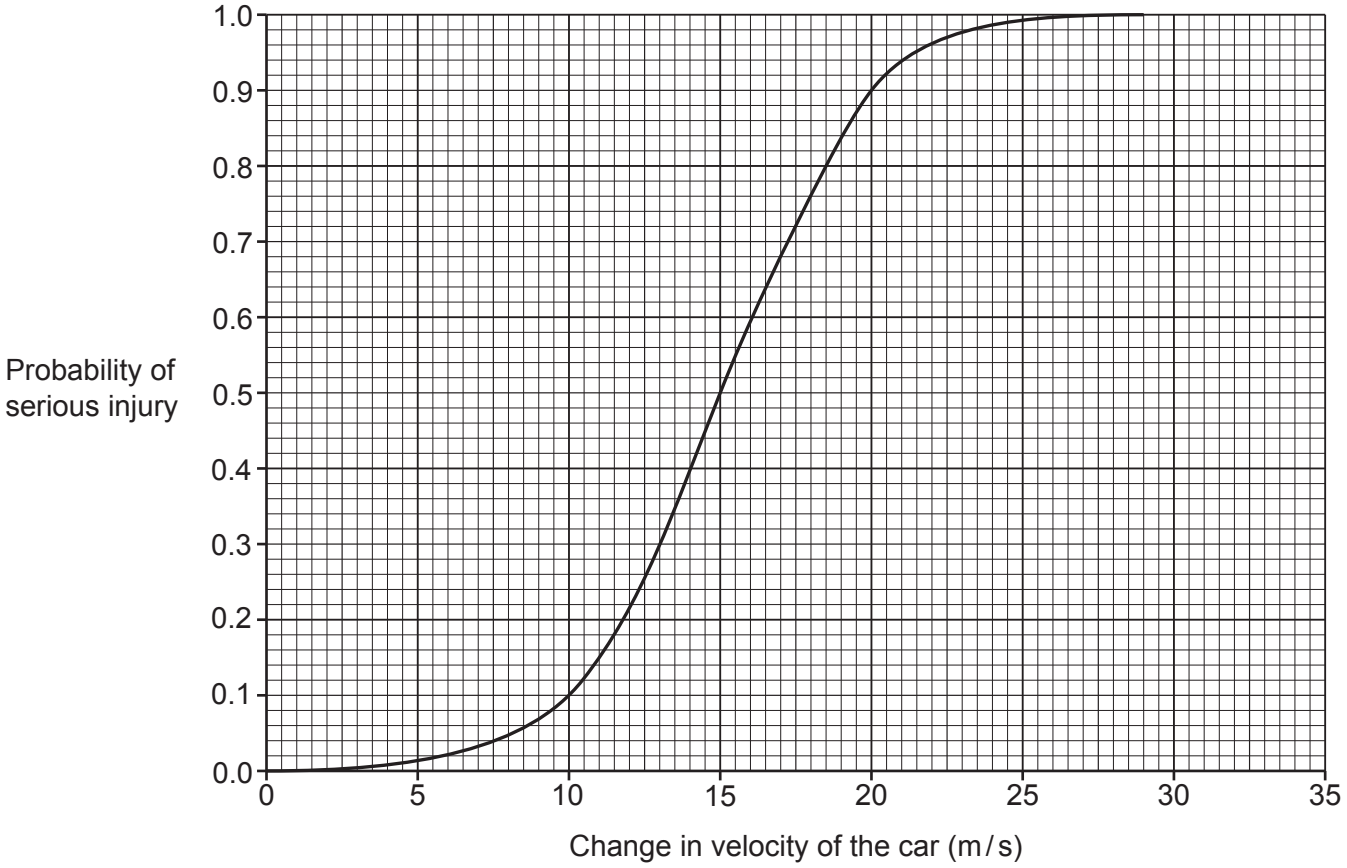

(i) Describe how the probability of serious injury changes as the change in velocity of the car increases from 10 m / s to 20 m / s.

Use values from the graph.

.....

.....

.....

.....

..... **[3]**

(ii) Use the graph to estimate the minimum change in velocity which **definitely** causes serious injury.

Change in velocity = ... m / s **[1]**

© OCR 2024

21

(a) A scientist measures the activity, in counts per minute (cpm), of different radioactive isotopes.

The diagram shows the equipment the scientist uses.

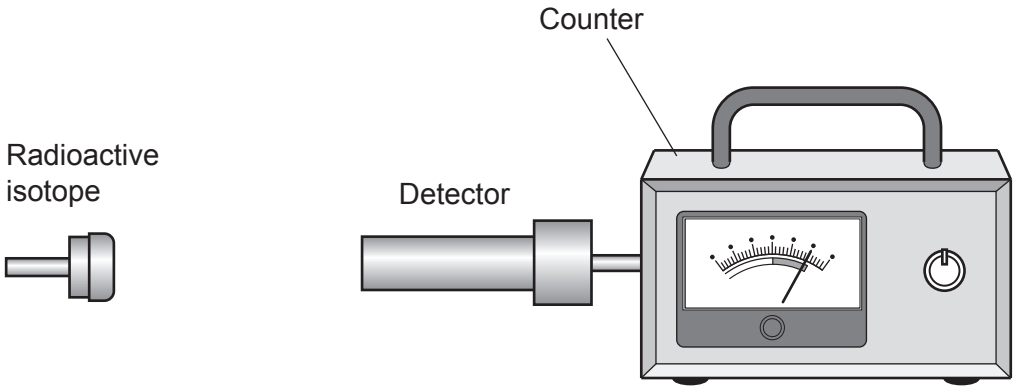

The scientist:
- Records the activity on the counter before the detector is switched on.
- Switches on the detector and records the activity with the radioactive isotope nearby.

The table shows the scientist's results.

	Activity (cpm)
Detector switched off	5
Detector switched on	420

(i) How can the scientist make the results more accurate?

Tick (✓) **one** box.

Handle the radioactive isotope using tongs. ☐

Move the radioactive isotope further away from the detector. ☐

Place lead in front of the radioactive isotope. ☐

Zero the counter and take another reading. ☐

[1]

(ii) The activity of a different radioactive isotope is 480 counts per minute (cpm).

Calculate the activity in counts per second.

Activity = ... counts per second **[1]**

© OCR 2024

(b) A radioactive isotope called yttrium-90 can be used to treat liver cancer.

(i) Yttrium-90 has a short half-life of 64 hours.

Explain why a short half-life is important for the patient.

.....

.....

..... **[2]**

(ii) Problems of using yttrium-90 to treat liver cancer include:

- poor appetite, abdominal pain, fever or sickness
- people in contact with the patient can be exposed to small doses of radiation.

Explain why patients are treated with yttrium-90 despite these problems.

.....

.....

..... **[2]**

© OCR 2024

22 This question is about how electricity is transferred from a power station to homes.

(a) Draw:
- **one** line to connect **each** type of transformer with the **one** box that describes what it does
- **one** line to connect what each type of transformer does with the **one** box that gives the reason for its use.

Type of transformer	What it does	Reason for its use
Step-down transformer	Decreases current	For safety
Step-up transformer	Decreases potential difference	Increases heat losses
	Generates current	Reduces heat losses

[2]

(b) The table shows information for a transformer.

Potential difference across primary coil	132 000 V
Current in secondary coil	1800 A
Potential difference across secondary coil	33 000 V

Calculate the current in the primary coil of the transformer.

Use the Equation Sheet.

Current in primary coil = ... A **[2]**

© OCR 2024

(c) A teacher connects the primary coil of a transformer to the domestic mains supply.

The teacher uses an oscilloscope to view the potential difference across the secondary coil of the transformer.

The graph shows the oscilloscope trace.

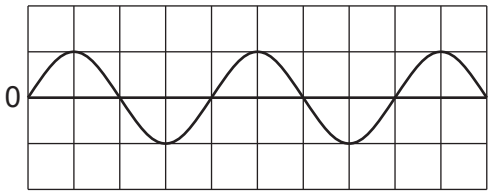

Use the graph to explain which type of current is supplied by the mains supply.

Type of current .....

Explanation .....

[2]

© OCR 2024

23 In 1986, there was an accident when a nuclear reactor in a power station exploded.

In the explosion, radioactive materials from inside the reactor were spread over the power station.

(a) Explain why workers at the power station were both contaminated **and** irradiated in the accident.

Contaminated because .....

.....

Irradiated because .....

.....

[2]

(b) The flow diagram shows energy transfers when electricity is generated in a nuclear power station.

Nuclear reaction	→	**Water is heated and changes into steam**	→	**Steam turns turbine**	→	**Generator produces electricity**
..... store of uranium decreases.		..... store of water increases.		..... store of turbine increases as it starts to turn.		Energy transferred electrically.

Complete the flow diagram to show the changes in energy stores. **[3]**

© OCR 2024

(c) One of the elements released in the accident when the nuclear reactor exploded was caesium-137.

Caesium-137 has a half-life of 30 years.

(i) Explain what is meant by the phrase ‘a half-life of 30 years’.

.....

..... **[1]**

(ii) Which sentence explains why we use the idea of half-life in radioactive decay?

Tick (✓) **one** box.

Radioactive decay is a random process. ☐

When a nucleus decays, it splits in half. ☐

With large numbers, it is easier to count half of the nuclei. ☐

[1]

(iii) In the accident, 28 kg of caesium-137 was released into the atmosphere.

What mass of caesium-137 remains undecayed after 90 years?

Mass = ... kg **[2]**

© OCR 2024

(d) A nuclear reactor needs neutrons to start a nuclear fission reaction.

A plutonium nucleus (Pu) decays into a uranium nucleus (U) and an alpha particle ($^{4}_{2}He$).

The alpha particle then joins with a beryllium nucleus (Be) to produce a carbon nucleus (C) and a neutron (n).

Complete the equations.

$$^{238}_{94}Pu \rightarrow \,^{\cdots\cdots}_{\cdots\cdots}U + \,^{4}_{2}He$$

$$^{9}_{4}Be + \,^{4}_{2}He \rightarrow \,^{12}_{6}C + \,^{\cdots\cdots}_{\cdots\cdots}n$$

[3]

END OF QUESTION PAPER

© OCR 2024

EXTRA ANSWER SPACE

If you need extra space use these lined pages. You must write the question numbers clearly in the margin.

© OCR 2024

OCR
Oxford Cambridge and RSA

Copyright Information

OCR is committed to seeking permission to reproduce all third-party content that it uses in its assessment materials. OCR has attempted to identify and contact all copyright holders whose work is used in this paper. To avoid the issue of disclosure of answer-related information to candidates, all copyright acknowledgements are reproduced in the OCR Copyright Acknowledgements Booklet. This is produced for each series of examinations and is freely available to download from our public website (www.ocr.org.uk) after the live examination series.

If OCR has unwittingly failed to correctly acknowledge or clear any third-party content in this assessment material, OCR will be happy to correct its mistake at the earliest possible opportunity.

For queries or further information please contact The OCR Copyright Team, The Triangle Building, Shaftesbury Road, Cambridge CB2 8EA.

OCR is part of Cambridge University Press & Assessment, which is itself a department of the University of Cambridge.

© OCR 2024