Oxford Cambridge and RSA

Wednesday 22 May 2024 – Morning

GCSE (9–1) Physics A (Gateway Science)

J249/01 (Foundation Tier)

Time allowed: 1 hour 45 minutes

You must have:
- a ruler (cm/mm)
- the Equation Sheet for GCSE (9–1) Physics A (inside this document)

You can use:
- a scientific or graphical calculator
- an HB pencil

F

Please write clearly in black ink. **Do not write in the barcodes.**

Centre number | | | | | | Candidate number | | | | |

First name(s) _____

Last name _____

INSTRUCTIONS
- Use black ink. You can use an HB pencil, but only for graphs and diagrams.
- Write your answer to each question in the space provided. If you need extra space use the lined pages at the end of this booklet. The question numbers must be clearly shown.
- Answer **all** the questions.
- Where appropriate, your answer should be supported with working. Marks might be given for using a correct method, even if the answer is wrong.

INFORMATION
- The total mark for this paper is **90**.
- The marks for each question are shown in brackets **[ ]**.
- Quality of extended response will be assessed in questions marked with an asterisk (*).
- This document has **32** pages.

ADVICE
- Read each question carefully before you start your answer.

© OCR 2024 [601/8651/3]
DC (ST/FC) 339824/7
OCR is an exempt Charity

Section A

You should spend a **maximum** of **30 minutes** on this section.

Write your answer to each question in the box provided.

1 Which word describes the charge on the **nucleus** of an atom?

A Negative

B Neutral

C Positive

D Zero

Your answer ☐ **[1]**

2 A student makes an electrical circuit.

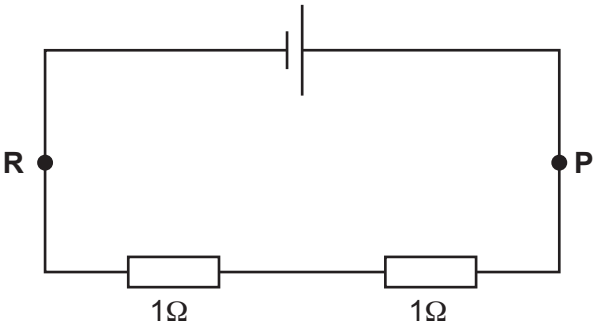

The current at point **P** in the circuit is 2 A.

What is the current at point **R**?

A 0 A

B 1 A

C 2 A

D 4 A

Your answer ☐ **[1]**

© OCR 2024

3 A teacher calculates the average speed of a student swimming the length of a pool.

The teacher measures:
- the distance of one length of the pool
- the time for the student to swim one length of the pool.

Which measuring instruments should the teacher use?

	Distance	**Time**
A	30 cm ruler	analogue clock
B	30 cm ruler	stopwatch
C	trundle wheel	analogue clock
D	trundle wheel	stopwatch

Your answer ☐ **[1]**

4 Energy is steadily supplied to a solid substance.

The graph shows the change in temperature with time.

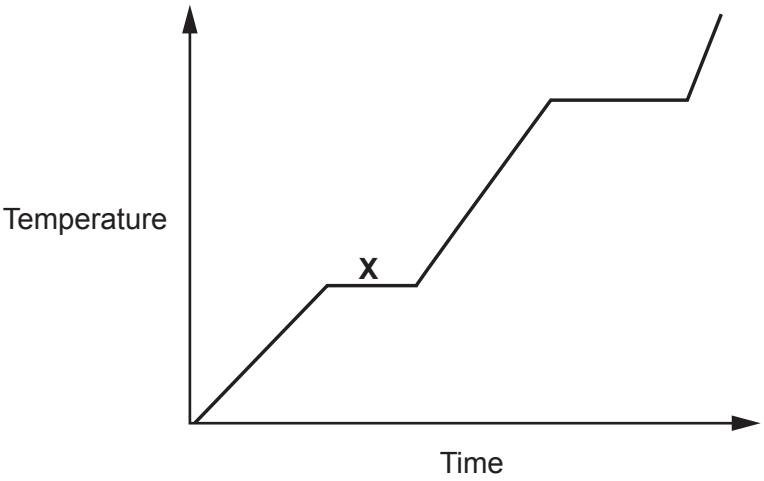

Which term describes what is happening to the substance at point **X**?

A Boiling

B Condensing

C Freezing

D Melting

Your answer ☐ **[1]**

© OCR 2024

5 A current-potential difference graph of an electrical component is shown.

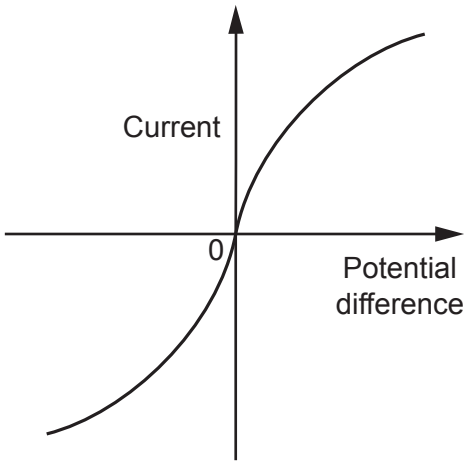

Which row describes the type of graph and identifies the electrical component?

	Type of graph	Component
A	linear	diode
B	linear	filament lamp
C	non-linear	diode
D	non-linear	filament lamp

Your answer ☐ **[1]**

© OCR 2024

6 A student makes a circuit to measure the current in a thermistor and the potential difference across it.

Which circuit is correct?

A

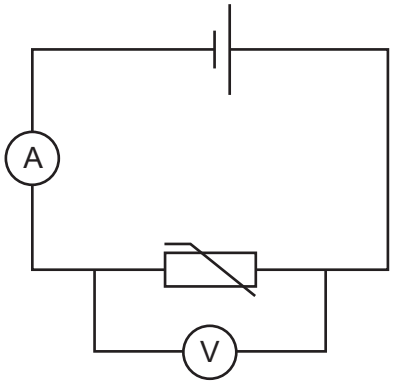

B

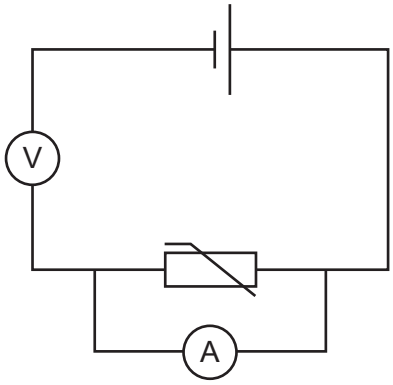

C

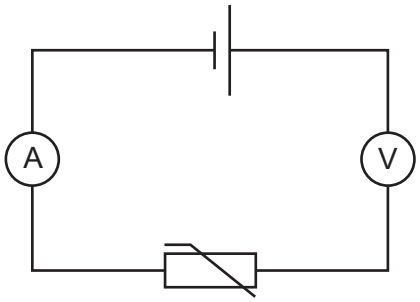

D

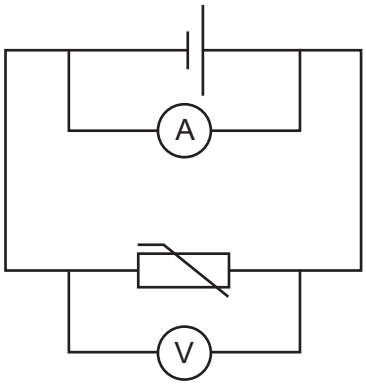

Your answer ☐ **[1]**

7 An object has a mass of 37.5 kg and a volume of 0.15 m^3.

What is the density of the object?

Use the equation: density = $\frac{\text{mass}}{\text{volume}}$

A 0.0040 kg/m^3

B 2.5 kg/m^3

C 5.6 kg/m^3

D 250 kg/m^3

Your answer ☐ **[1]**

© OCR 2024

8 Person **Q** has a mass of 50 kg and climbs a vertical distance of 6 m in 6 s.

Person **R** has a mass of 60 kg and climbs a vertical distance of 6 m in 5 s.

Who has the most power and why?

A Person **Q** because they have a smaller mass.

B Person **Q** because they transfer more energy in a longer time.

C Person **R** because a greater mass always means a greater power.

D Person **R** because they transfer more energy in a shorter time.

Your answer ☐ **[1]**

9 A spring is stretched by a load but does **not** return to its original length when the load is removed.

Which statement correctly describes the spring?

A The force-extension graph for the spring is linear.

B The spring has plastic deformation.

C The spring is elastic.

D The spring obeys Hooke's Law.

Your answer ☐ **[1]**

10 A car travels at a constant speed. The car travels 32 km in 20 minutes.

How long does it take the car to travel 128 km?

A 60 minutes

B 80 minutes

C 100 minutes

D 116 minutes

Your answer ☐ **[1]**

© OCR 2024

11 A basket of flowers hangs at the end of a horizontal pole attached to a vertical wall.

The basket weighs 8 N and hangs from a point on the pole 40 cm away from the wall.

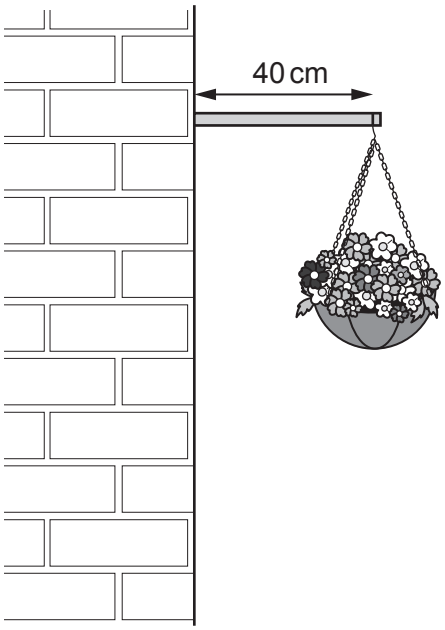

What is the moment of the basket about the point where the pole is attached to the wall?

Use the equation: moment of a force = force × distance

A 3.2 N m anti-clockwise

B 3.2 N m clockwise

C 320 N m anti-clockwise

D 320 N m clockwise

Your answer ☐ **[1]**

© OCR 2024

12 What is the correct order, from oldest to newest model, for the development of the atomic theory?

A Bohr → Thomson → Rutherford

B Rutherford → Bohr → Thomson

C Thomson → Bohr → Rutherford

D Thomson → Rutherford → Bohr

Your answer ☐ **[1]**

13 A teacher draws a graph showing the relationship between time, **t**, and velocity, **v**.

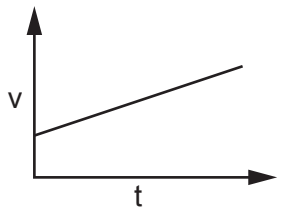

What information does the gradient tell us?

A Acceleration

B Distance travelled

C Final velocity

D Start velocity

Your answer ☐ **[1]**

© OCR 2024

14 A cyclist starts at an initial velocity of 0.0 m/s and accelerates at 1.4 m/s^2 for a distance of 20 m.

What is the **final velocity** of the cyclist?

Use the equation: (final velocity)^2 – (initial velocity)^2 = 2 × acceleration × distance

A 5.3 m/s

B 7.5 m/s

C 28 m/s

D 56 m/s

Your answer ☐ **[1]**

15 A molecule is made up of 10 atoms in a row.

Which measurement is a typical size for this **molecule**?

A 1×10^{-15} m

B 1×10^{-13} m

C 1×10^{-11} m

D 1×10^{-9} m

Your answer ☐ **[1]**

© OCR 2024

Section B

16 This question is about how gas molecules cause pressure.

(a) The diagram shows gas molecules exerting a pressure when they collide with the walls of a container.

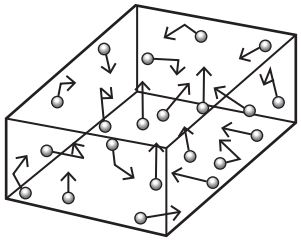

Complete each sentence to explain how gas pressure changes with temperature.

Use words from the list.

decreases	**force**	**increases**	**size**	**speed**	**temperature**

As the ..... of the gas increases the molecules have greater average

..... .

The gas molecules collide more often with the walls of the container.

This exerts a greater ..... over the same area and the gas pressure

..... .

[4]

(b) Scientists often use models to help develop explanations and solve problems.

Which statements describe a **simple** model of the Earth's atmosphere?

Tick (✓) **three** boxes.

- It covers the Earth to a height of about 700 km. ☐
- It covers the Earth to a height of about 700 m. ☐
- The atmospheric pressure decreases as you move away from the Earth's surface. ☐
- The density is greater as you move away from the Earth's surface. ☐
- The density is uniform. ☐
- The thickness of the atmosphere is large compared to the Earth's diameter. ☐

[3]

© OCR 2024

(c) Calculate the constant for a gas with a volume of 1.5 m^3 and a pressure of 5000 Pa.

Use the equation: pressure × volume = constant

Constant = ... Pa m^3 **[2]**

© OCR 2024

17 A student makes a circuit using a cell, three switches and two identical filament lamps.

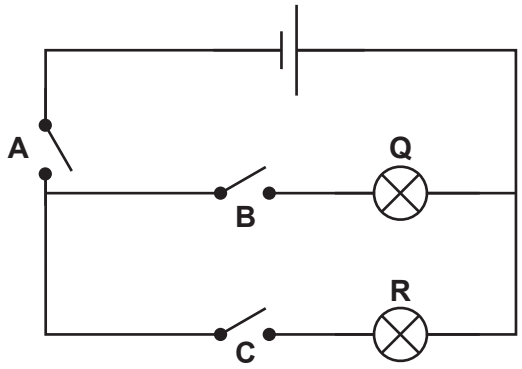

(a) Which switch or switches does the student close so that **only** lamp **Q** lights up?

..... **[1]**

(b) Which switch or switches does the student close so that **only** lamp **R** lights up?

..... **[1]**

(c) The switches are closed so that **both** lamp **Q** and lamp **R** light up.

Which sentence describes the brightness of lamp **Q** and lamp **R**?

Tick (✓) **one** box.

Both lamps are the same brightness. ☐

Lamp **Q** is brighter than lamp **R**. ☐

Lamp **R** is brighter than lamp **Q**. ☐

[1]

(d) Explain your answer to **(c)**.

.....

..... **[1]**

© OCR 2024

(e) Complete the sentences to explain what happens to the resistance of the metal wire inside the filament lamp when the current increases.

Use words or phrases from the list.

atoms	**decreases**	**elastic potential**	**electrons**
increases	**protons**	**stays the same**	**thermal**

As the current increases, the resistance of the metal wire ..... .

The ..... collide more often with the positive ions in the wire.

This increases the ..... energy of the wire.

[3]

© OCR 2024

18 This question is about static electricity.

(a)
(i) Describe how a teacher charges a balloon with a cloth.

..... **[1]**

(ii) When the teacher charges the balloon, it becomes **positively** charged.

Describe what happens to the charges on the balloon as the balloon becomes positively charged.

.....

..... **[1]**

(iii) Explain why the balloon sticks to a negatively charged rod.

.....

..... **[1]**

(b) Static electricity can build up in thunderclouds.

In one thundercloud the potential difference between the thundercloud and the ground is 5.0×10^8 V.

When lightning strikes the ground, 7.5×10^9 J of energy is transferred.

Calculate the amount of charge which flows when lightning strikes.

Use the equation: energy transferred = charge × potential difference

Charge = ... C **[3]**

(c) Calculate the charge flow in a circuit when there is a current of 15 A for 2 minutes.

Use the equation: charge flow = current × time

Charge flow = ... C **[3]**

© OCR 2024

BLANK PAGE

PLEASE DO NOT WRITE ON THIS PAGE

© OCR 2024

19 The diagram shows a water rocket on the ground.

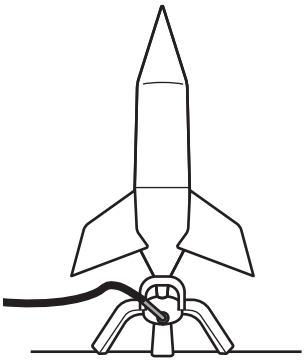

(a)
(i) The rocket is stationary on the ground.

What are the names of the upwards force and the downwards force on the rocket?

Use words from the list.

normal contact force	**tension**	**thrust**	**weight**

Upwards force: .....

Downwards force: ..... **[2]**

(ii) The rocket lifts off the ground when water is pushed out of the bottom of the rocket.

Explain how Newton's third law applies to the rocket as it lifts off the ground.

Use ideas about the force of the water and the force of the rocket.

.....

.....

..... **[2]**

(iii) Describe the conditions needed for the rocket to accelerate upwards.

Use ideas about the upwards force and the downwards force.

.....

..... **[1]**

© OCR 2024

(b)

(i) The rocket has a mass of 5.0 kg and rises a vertical distance of 45 m.

Calculate the gravitational potential energy gained by the rocket.

Use the equation: gravitational potential energy = mass × gravitational field strength × height

Gravitational field strength = 10 N / kg

Gravitational potential energy = ... J **[2]**

(ii) A different water rocket does 12 500 J of work in 5 seconds when it rises upwards.

Calculate the power of this water rocket.

Use the equation: power = $\frac{\text{work done}}{\text{time}}$

Include the correct unit.

Power = ... Unit ..... **[3]**

(c) A student writes a summary about gravitational fields.

The student has made **two** mistakes in their summary.

> Gravitational Fields
>
> All matter has a gravitational field.
>
> Gravitational fields cause repulsion.
>
> More massive objects have a smaller gravitational field strength.

Identify the **two** mistakes and write down the correct word for each mistake.

Mistake 1: .....

Correct word 1: .....

Mistake 2: .....

Correct word 2: .....

[4]

© OCR 2024

20 A scientist investigates the specific heat capacity of different solid materials.

The diagram shows the equipment the scientist uses.

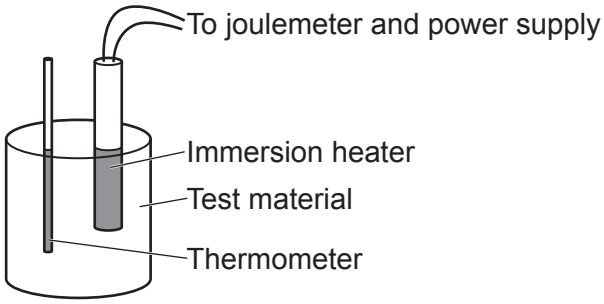

(a) The scientist wants to get more accurate values for the specific heat capacities of the different materials.

Suggest **one** thing the scientist can do to improve the set-up of their equipment.

Give a reason for your answer.

Suggestion .....

.....

Reason .....

.....

[2]

(b) The table shows the results for the materials.

Material	**Specific heat capacity (J / kg °C)**
aluminium	900
concrete	1000
copper	385
iron	450

A chef buys a saucepan made from the material in the table which will increase in temperature the most quickly when it is heated.

State and explain which material the saucepan is made from.

Material .....

Explanation .....

.....

[2]

© OCR 2024

(c) Complete the sentence to explain the meaning of **specific latent heat of vaporisation**.

Specific latent heat of vaporisation is the energy transferred when .....

.....

..... **[2]**

© OCR 2024

21

(a) A teacher fills up a plastic bottle with water.

The teacher makes a small hole in the side of the bottle so that the water flows out.

(i) At what angle to the side of the bottle does the water flow out?

..... **[1]**

(ii) Explain why the water flows out of the bottle at this angle.

.....

..... **[1]**

(b) A force of 1.8 N acts on a 0.12 m^2 area of ground.

(i) Calculate the pressure exerted on the ground.

Use the Equation Sheet.

Pressure = ... Pa **[3]**

(ii) The force is kept constant and the area the force acts on is halved.

What happens to the pressure exerted on the ground?

..... **[1]**

© OCR 2024

BLANK PAGE

PLEASE DO NOT WRITE ON THIS PAGE

© OCR 2024

22* A student does an experiment to investigate how the resultant force on an object affects the acceleration of the object (Newton's second law).

The diagram shows some of the equipment the student uses.

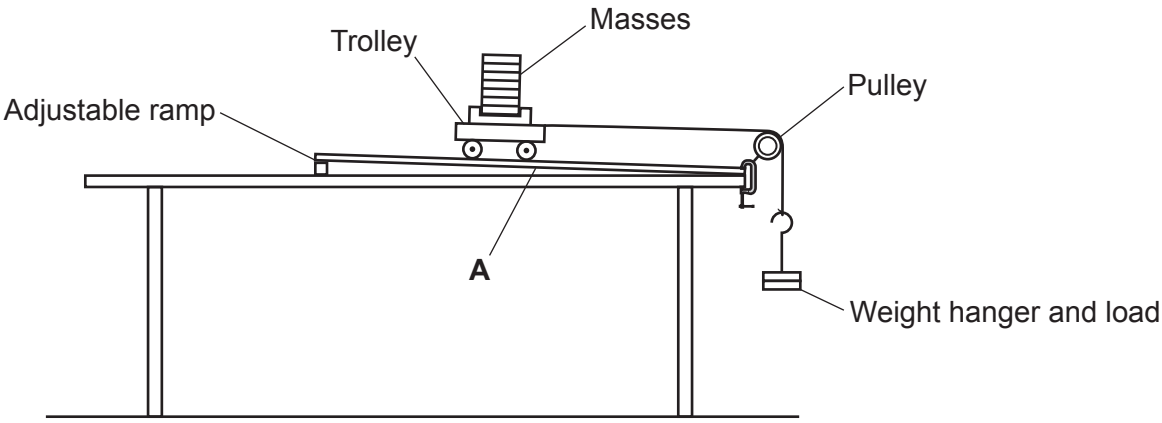

This is their method:

- Release the trolley from position **A** on the ramp.
- Measure the acceleration using light gates and a data logger (**not** shown in the diagram).
- Repeat for three different loads by moving masses from the trolley to the weight hanger.

These are their results:

Load (N)	**Acceleration (m / s^2)**
2	1.5
4	3.12
8	6

© OCR 2024

Describe the trend shown by the student's results.

Suggest how the student could improve their method to obtain more accurate and precise results.

.....

.....

.....

.....

.....

.....

.....

.....

.....

.....

.....

..... **[6]**

© OCR 2024

23

(a) **Fig. 23.1** shows a (dipping) compass used in schools.

It is currently showing the reading for the UK.

Fig. 23.1

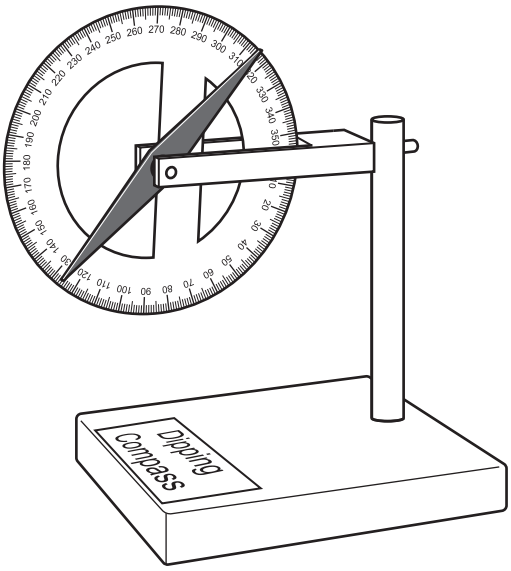

(i) Describe how the position of the needle changes if the compass is moved from the equator to the poles of the Earth.

.....

.....

.....

..... **[2]**

(ii) What does your answer to **(a)(i)** suggest about the Earth's core?

..... **[1]**

© OCR 2024

(b) **Fig. 23.2** shows the equipment a teacher sets up to demonstrate using a plotting compass to investigate the magnetic field around a current-carrying wire.

Fig. 23.2

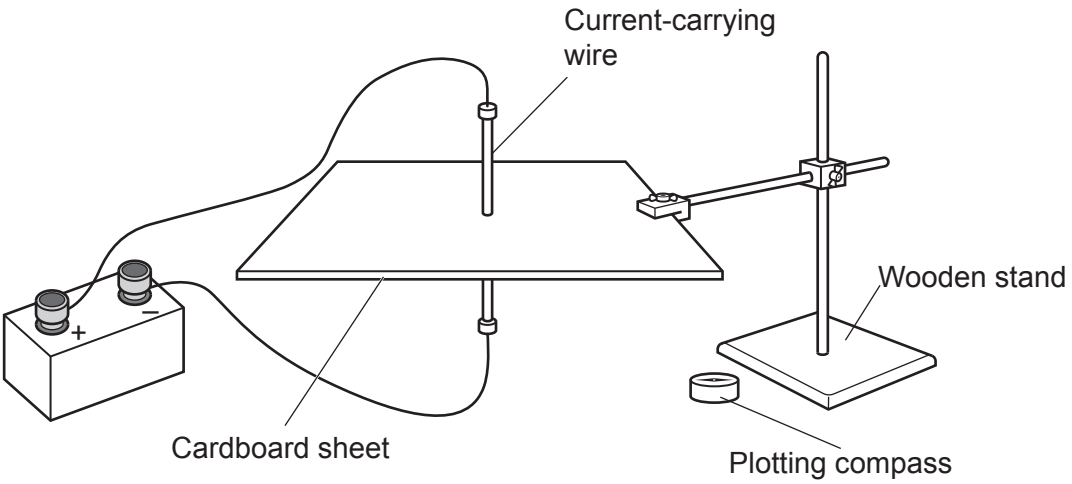

(i) Describe how the teacher uses this equipment to show the shape of the magnetic field around the current-carrying wire.

.....

.....

.....

.....

..... **[3]**

(ii) On **Fig. 23.3** sketch the magnetic field around the current carrying wire.

Fig. 23.3

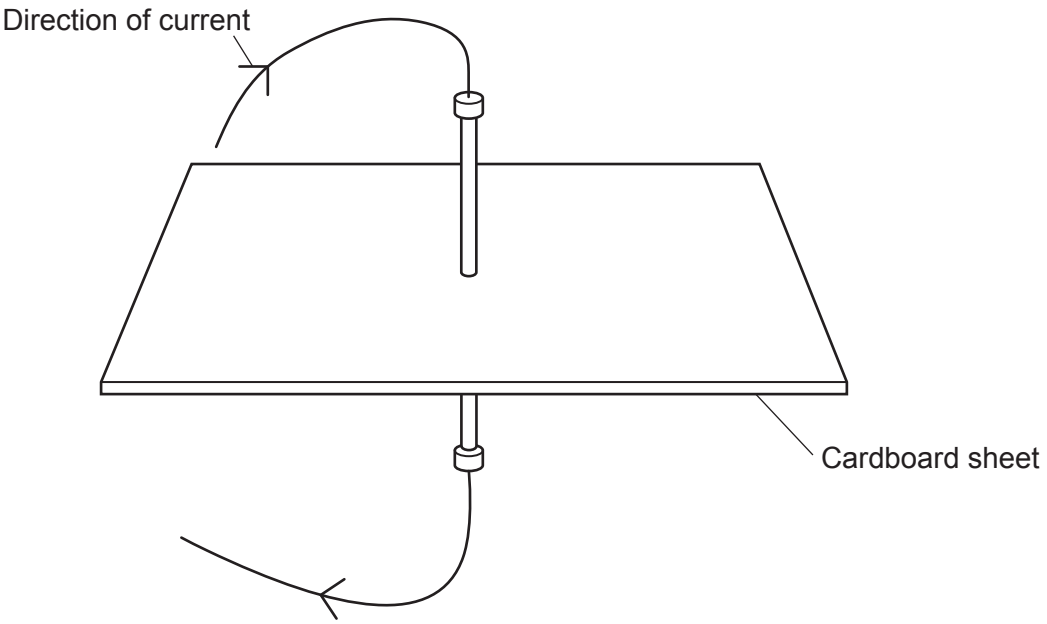

[2]

© OCR 2024

24 An engineer investigates the properties of a spring.

This is their method:

- Carefully add different loads to the spring.
- Measure the extension of the spring for each load.
- Repeat the experiment three times for each load.

The table shows the engineer's results.

Load (N)	Extension (cm)			
	Test 1	**Test 2**	**Test 3**	**Mean**
100	2.1	2.2	2.2	
200	4.2	4.2	4.2	4.2
300	6.3	6.5	6.4	6.4
400	8.6	8.6	8.6	8.6
500	10.6	10.4	10.8	10.6

(a)
(i) Calculate the missing value of the mean extension for a load of 100 N to a suitable degree of accuracy.

Mean = ... cm **[1]**

© OCR 2024

(ii) Plot the missing value on the graph for a load of 100 N.

Draw a line of best fit.

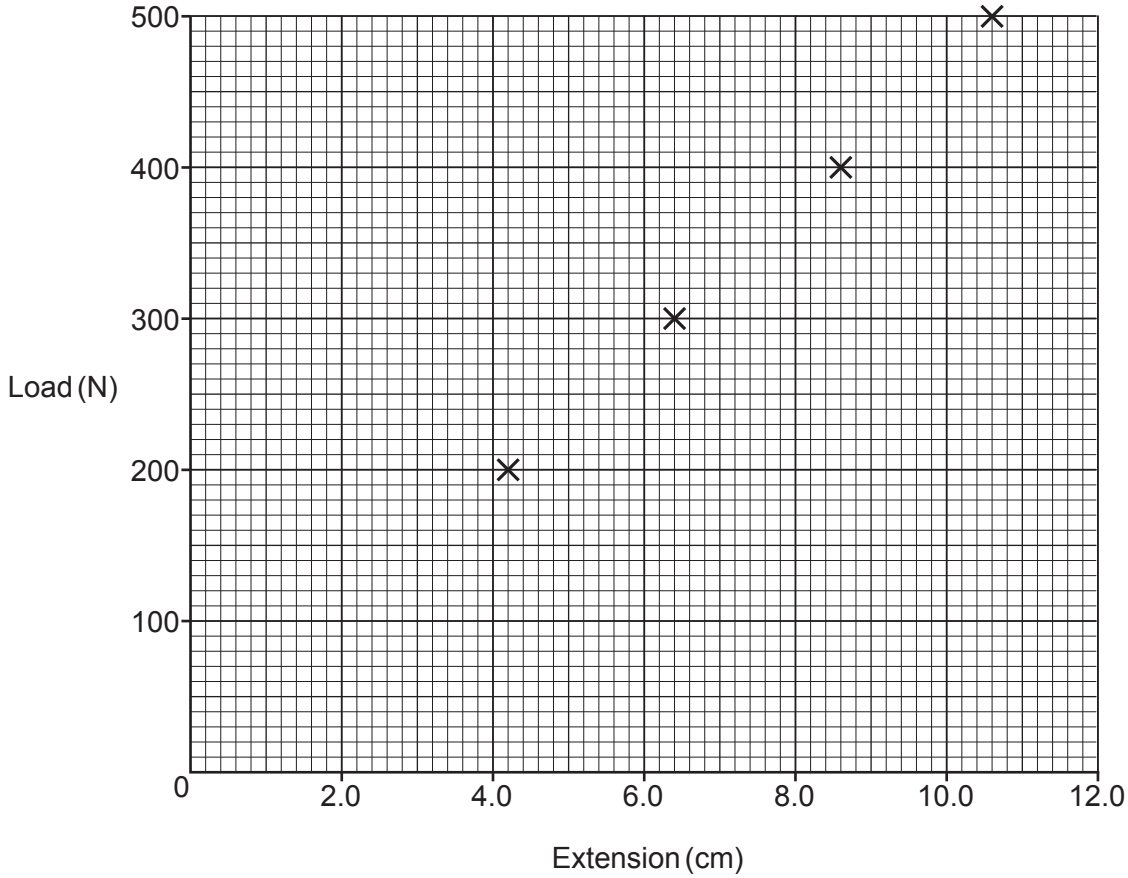

[2]

(iii) Calculate the gradient of the graph. Show your workings on the graph.

Gradient = ... N / cm **[2]**

(iv) Use your answer to **(a)(iii)** to determine the spring constant for the spring.

Spring constant = ... N / cm **[1]**

© OCR 2024

(b) When the engineer repeats the experiment, they use the same method and the same equipment.

The engineer says the results show that the experiment is reproducible.

Suggest **two** reasons why the engineer is **incorrect**.

1 .....

.....

2 .....

.....

[2]

(c) Identify **one** possible hazard for this experiment and the precaution the engineer should take.

Hazard .....

Precaution .....

.....

[2]

END OF QUESTION PAPER

© OCR 2024

EXTRA ANSWER SPACE

If you need extra space use these lined pages. You must write the question numbers clearly in the margin.

© OCR 2024

© OCR 2024

© OCR 2024

OCR
Oxford Cambridge and RSA

Copyright Information

OCR is committed to seeking permission to reproduce all third-party content that it uses in its assessment materials. OCR has attempted to identify and contact all copyright holders whose work is used in this paper. To avoid the issue of disclosure of answer-related information to candidates, all copyright acknowledgements are reproduced in the OCR Copyright Acknowledgements Booklet. This is produced for each series of examinations and is freely available to download from our public website (www.ocr.org.uk) after the live examination series.

If OCR has unwittingly failed to correctly acknowledge or clear any third-party content in this assessment material, OCR will be happy to correct its mistake at the earliest possible opportunity.

For queries or further information please contact The OCR Copyright Team, The Triangle Building, Shaftesbury Road, Cambridge CB2 8EA.

OCR is part of Cambridge University Press & Assessment, which is itself a department of the University of Cambridge.

© OCR 2024