Oxford Cambridge and RSA

Thursday 25 May 2023 – Morning

GCSE (9–1) Physics A (Gateway Science)

J249/03 Paper 3 (Higher Tier)

Time allowed: 1 hour 45 minutes

You must have:
- a ruler (cm/mm)
- the Equation Sheet for GCSE (9–1) Physics A (inside this document)

You can use:
- a scientific or graphical calculator
- an HB pencil

H

Please write clearly in black ink. **Do not write in the barcodes.**

Centre number | | | | | | Candidate number | | | | |

First name(s) _____

Last name _____

INSTRUCTIONS
- Use black ink. You can use an HB pencil, but only for graphs and diagrams.
- Write your answer to each question in the space provided. If you need extra space use the lined pages at the end of this booklet. The question numbers must be clearly shown.
- Answer **all** the questions.
- Where appropriate, your answer should be supported with working. Marks might be given for a correct method, even if the answer is wrong.

INFORMATION
- The total mark for this paper is **90**.
- The marks for each question are shown in brackets **[ ]**.
- Quality of extended response will be assessed in questions marked with an asterisk (*).
- This document has **28** pages.

ADVICE
- Read each question carefully before you start your answer.

© OCR 2023 [601/8651/3]
DC (LK/SW) 327182/3
OCR is an exempt Charity

Section A

You should spend a **maximum** of **30 minutes** on this section.

Write your answer to each question in the box provided.

1 What is 15 J converted into newton-metres?

A 0.15 N m

B 1.5 N m

C 15 N m

D 150 N m

Your answer ☐ **[1]**

2 What is the correct order of the three states of matter in **increasing** density?

A Gas → liquid → solid

B Liquid → gas → solid

C Liquid → solid → gas

D Solid → liquid → gas

Your answer ☐ **[1]**

© OCR 2023

3 Four athletes run a race in different times.

Athlete	Time taken (s)
1	21.5
2	21.6
3	
4	21.5
Mean	21.4

What is the time taken by athlete 3?

A 21.0 s

B 21.1 s

C 21.4 s

D 21.5 s

Your answer ☐ **[1]**

4 Which sentence is correct when a lever is used as a force multiplier?

A The effort force and load force are both situated at the pivot.

B The effort force is closer to the pivot than the load.

C The load force and the effort force are the same distance from the pivot.

D The load is closer to the pivot than the effort force.

Your answer ☐ **[1]**

© OCR 2023

5 One mile is equal to 1609 metres.

How many miles are there in 5000 metres?

A 0.3218 miles

B 0.6782 miles

C 2.108 miles

D 3.108 miles

Your answer ☐ **[1]**

6 A scientist wants to publish a new theory.

Which step should the scientist take before publishing the theory?

A Check the new theory with a friend.

B Have the new theory peer reviewed.

C Keep the new theory secret to avoid others copying.

D Publish the new theory in a local magazine.

Your answer ☐ **[1]**

7 Which row describes properties of electric fields and gravitational fields?

	Electric fields	**Gravitational fields**
A	attractive only	attractive only
B	attractive only	attractive and repulsive
C	attractive and repulsive	attractive only
D	attractive and repulsive	attractive and repulsive

Your answer ☐ **[1]**

© OCR 2023

8 Which sentence correctly describes an object when it is moving in a circle at a constant speed?

A The object is accelerating as its velocity is changing.

B The object is accelerating as its velocity is constant.

C The object is not accelerating as acceleration is a scalar quantity.

D The object is not accelerating as its speed is constant.

Your answer ☐ **[1]**

9 A student investigates moments using a beam placed on a pivot as shown in the diagram. The student holds the beam.

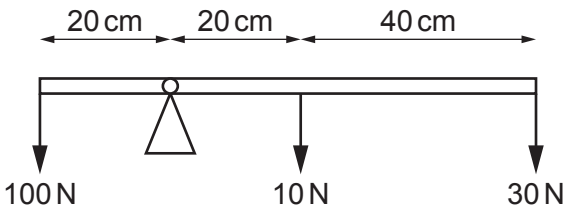

What happens to the beam when the student releases it?

A It rotates anti-clockwise with a net moment of 60 N cm.

B It rotates anti-clockwise with a net moment of 600 N cm.

C It rotates clockwise with a net moment of 2000 N cm.

D It stays in equilibrium.

Your answer ☐ **[1]**

© OCR 2023

10 Which diagram shows the correct thumb and finger labels when using Fleming's left-hand rule?

A

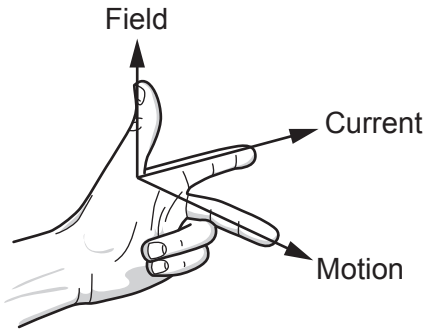

B

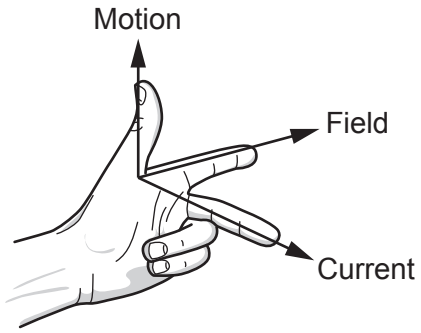

C

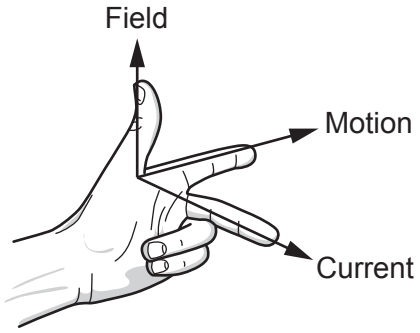

D

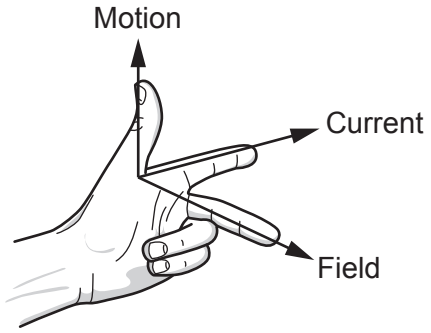

Your answer ☐ **[1]**

© OCR 2023

11 An engineer uses a sensing circuit which produces a high output voltage when it gets dark.

Which circuit does the engineer use?

A

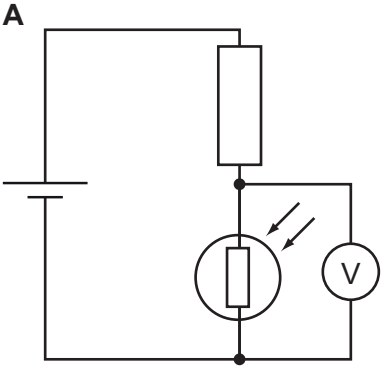

B

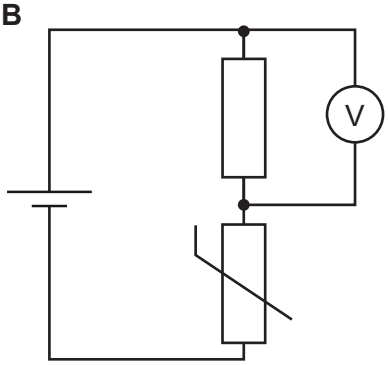

C

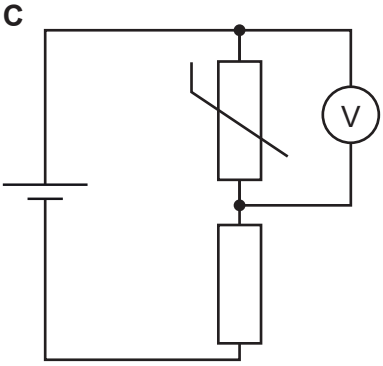

D

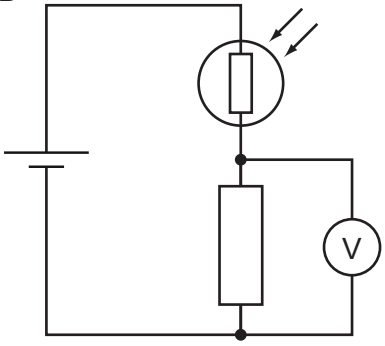

Your answer ☐ **[1]**

12 A submarine in an ocean dives from a depth of 50 m to a depth of 60 m.

What is the change in pressure due to the water acting on the submarine?

Use the Equation Sheet.

Density of seawater = 1010 kg / m^3

Use g = 10 N / kg

A 10.1 Pa

B 1010 Pa

C 101 000 Pa

D 606 000 Pa

Your answer ☐ **[1]**

© OCR 2023

13 A scientist draws a velocity–time graph for an object.

What is the distance travelled by the object in 15 s?

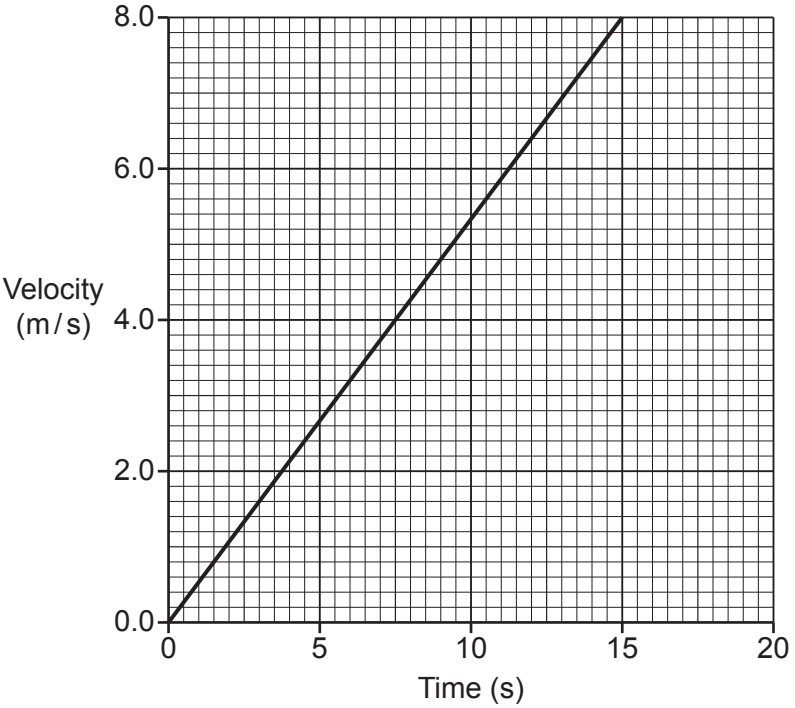

A 0.53 m

B 1.9 m

C 60 m

D 120 m

Your answer ☐ **[1]**

© OCR 2023

14 A teacher makes a model transformer as shown in the diagram.

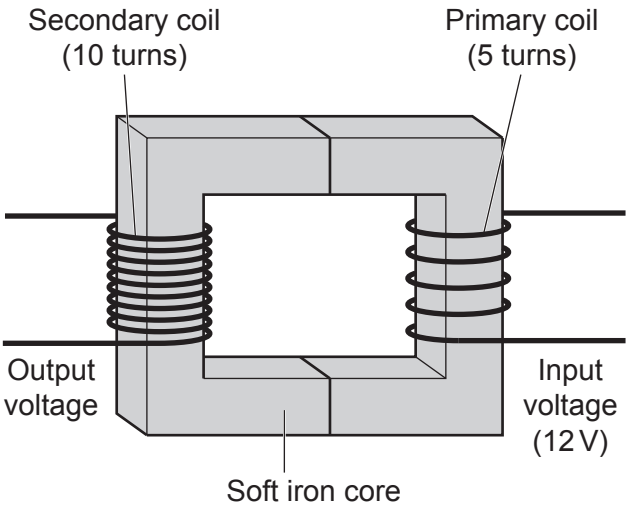

Which row gives the correct type of transformer and its output voltage?

	Type of transformer	Output voltage (V)
A	step-down	6.0
B	step-down	24
C	step-up	6.0
D	step-up	24

Your answer ☐ **[1]**

15 A 0.50 kg ball moving at 3.0 m / s to the right collides with a stationary 0.60 kg ball and stops.

What is the velocity of the 0.60 kg ball immediately after the collision?

Use the Equation Sheet.

A 0.90 m / s to the left

B 0.90 m / s to the right

C 2.5 m / s to the left

D 2.5 m / s to the right

Your answer ☐ **[1]**

© OCR 2023

BLANK PAGE

PLEASE DO NOT WRITE ON THIS PAGE

© OCR 2023

Section B

16 **(a)** A teacher drops a ball from a height of 2.1 m. The ball hits the floor after 0.6 s.

Calculate the average speed of the ball as it falls.

Use the equation: distance travelled = average speed × time

Average speed = ... m/s **[3]**

(b) The teacher draws a free body force diagram for the ball as it falls.

(i) Label the two forces acting on the ball as it falls. **[2]**

(ii) Explain the motion of the ball as it falls.

.....

.....

..... **[2]**

(c) A lorry has a mass of 30 000 kg.

Calculate the force needed to accelerate the lorry at 3.0 m/s^2.

Use the Equation Sheet.

Force = ... N **[3]**

© OCR 2023

17 A scientist investigates how the pressure and volume of a gas are related.

The results from their experiment are shown in the table.

Pressure (kPa)	**Volume (cm^3)**
300	250
500	150
625	120
1000	75
1250	60

(a) Explain how these results show that pressure × volume = constant.

Use calculations in your answer.

.....

.....

.....

..... **[3]**

© OCR 2023

(b) The graph shows the scientist's results.

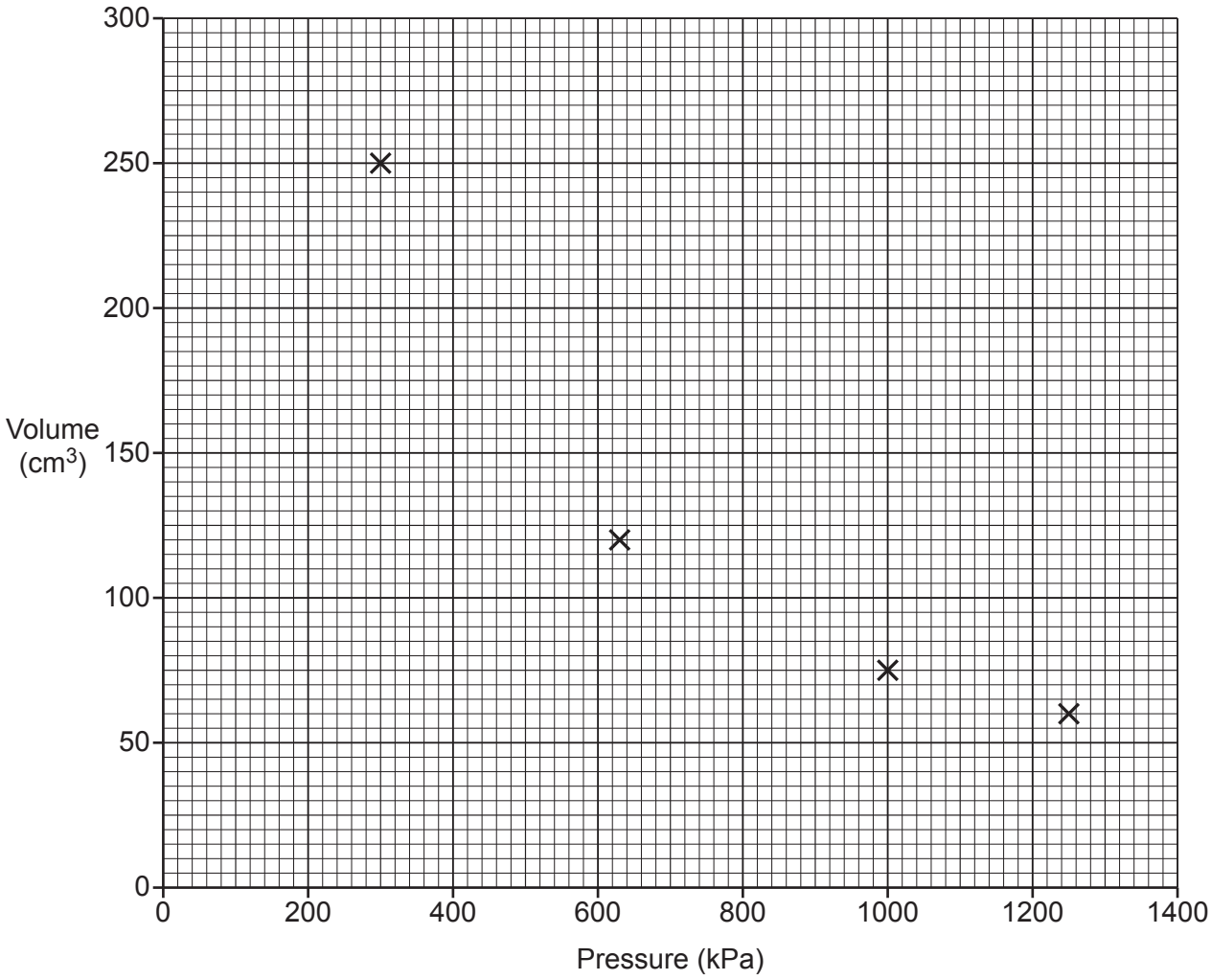

(i) Plot the missing point on the graph. **[1]**

(ii) Draw a line of best fit on the graph. **[1]**

(iii) Use the graph to find the volume of gas at 900 kPa.

Volume of gas = ... cm^3 **[1]**

(c) Explain how and why atmospheric pressure changes with height above the surface of the Earth.

.....

.....

.....

..... **[2]**

© OCR 2023

18 A teacher stretches an elastic band by increasing the force applied and measures the extension during loading.
The teacher then reduces the force applied and measures the extension during unloading.

Fig. 18.1 shows the force–extension graph of their results.

Fig. 18.1

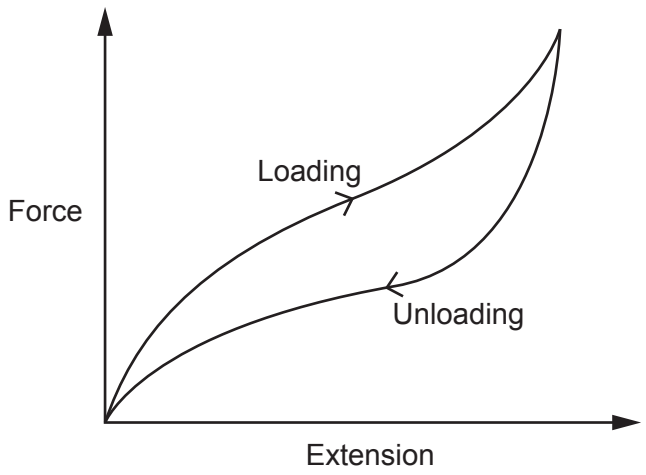

(a) The teacher writes some facts about the experiment.

State if each fact is **correct** or **incorrect**. Put a (ring) around the correct option.
Explain your answers.

(i) The elastic band obeys Hooke's Law.

correct **incorrect**

Reason .....

..... **[1]**

(ii) The elastic band undergoes plastic deformation.

correct **incorrect**

Reason .....

..... **[1]**

(iii) There is a linear relationship between force and extension for the elastic band.

correct **incorrect**

Reason .....

..... **[1]**

© OCR 2023

(b) A spring has a spring constant of 28 N / m.

Calculate the work done stretching this spring by 0.20 m.

Use the Equation Sheet.

Work done = ... J **[2]**

(c) The teacher pulls another object with two separate forces of 2.0 N and 3.0 N.
The forces act at right angles to each other.

Fig. 18.2 shows the two forces.

Fig. 18.2

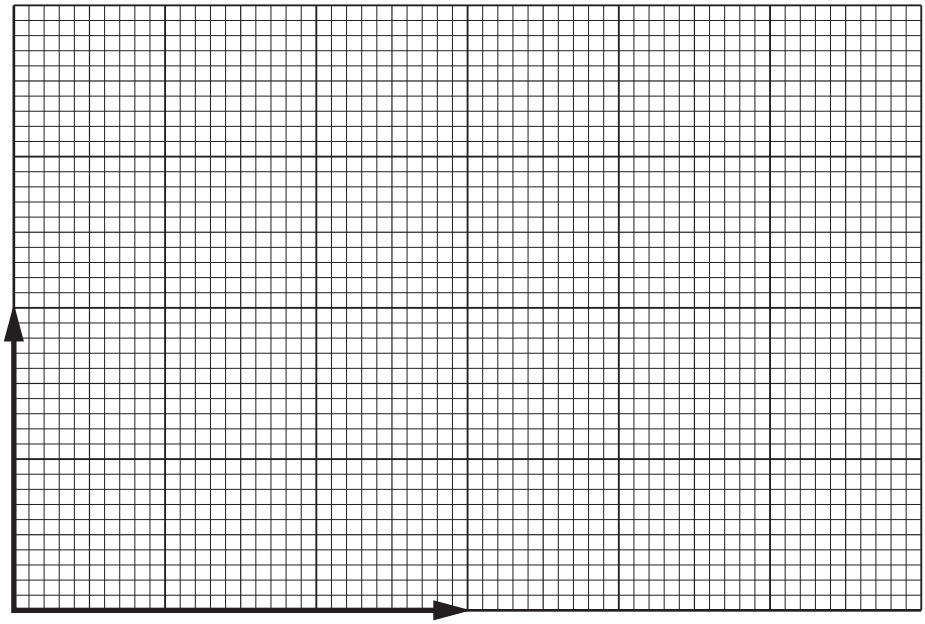

Scale: 1 N = 2 cm

On **Fig. 18.2** draw the resultant force on the object.

Determine the magnitude of the resultant force.

Resultant force = ... N **[3]**

© OCR 2023

19 A student investigates the current–potential difference characteristics of a diode.

Fig. 19.1 shows the circuit diagram the student sets up to measure the current in the diode and the potential difference across the diode.

Fig. 19.1

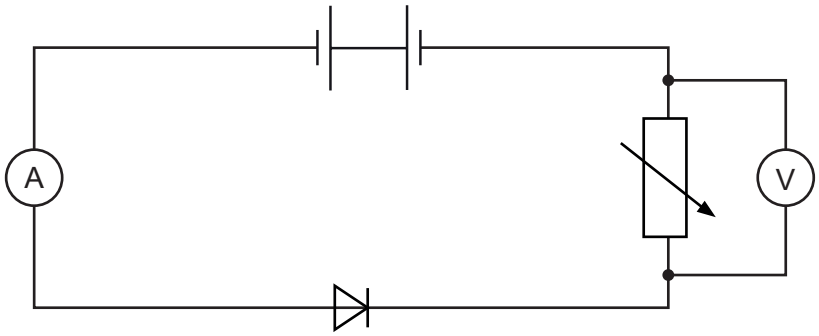

(a) The student has made **two** mistakes when setting up the circuit.

Identify the two mistakes and explain how to correct them.

Mistake 1 .....

Correction 1 .....

Mistake 2 .....

Correction 2 .....

[4]

© OCR 2023

(b) The student corrects the circuit and records the current for different values of the potential difference. **Fig. 19.2** shows a graph of their results.

Fig. 19.2

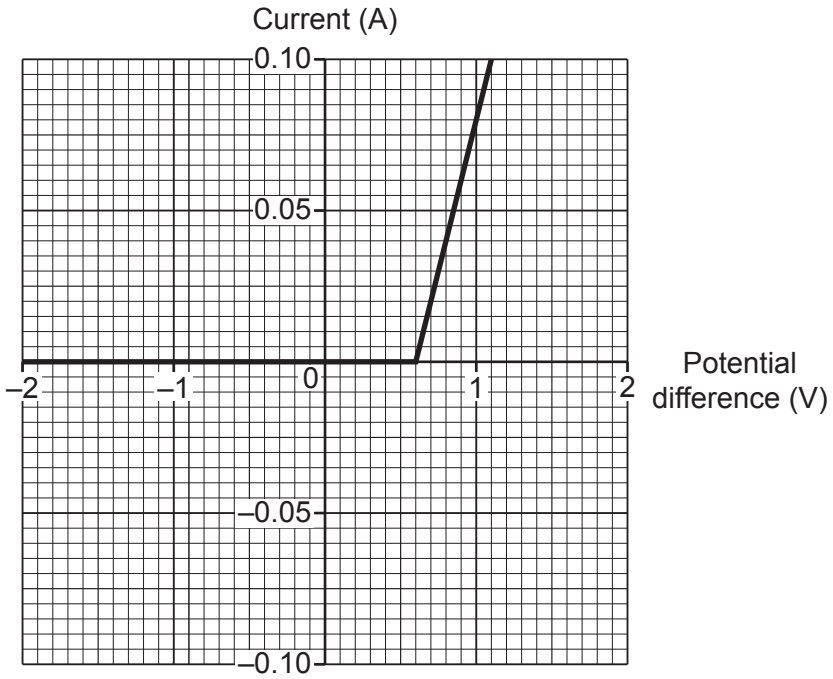

(i) State the potential difference when the diode starts to conduct.

..... **[1]**

(ii) Use the gradient of the graph to calculate a value for the resistance of the diode when it is conducting.

Resistance = ... Ω **[4]**

© OCR 2023

20 **(a)** Explain **two** similarities and **two** differences between the operation of a loudspeaker and the operation of a microphone.

Similarities .....

.....

.....

Differences .....

.....

.....

[4]

(b) The diagram shows a current-carrying wire in the magnetic field between the North pole and the South pole of a magnet.

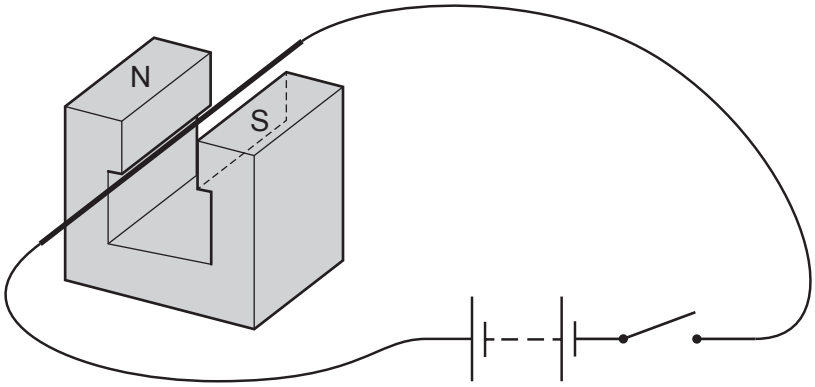

Describe and explain what happens to the wire when the switch is **closed**.

.....

.....

.....

.....

..... **[3]**

(c) A current of 5.0 A passes through a wire with a length of 0.75 m.

The wire is in a field of magnetic flux density 0.30 T.

Calculate the force acting on the wire.

Give your answer to **2** significant figures.

Use the Equation Sheet.

Force = ... N **[3]**

© OCR 2023

BLANK PAGE

PLEASE DO NOT WRITE ON THIS PAGE

© OCR 2023

21 A student makes a solenoid by wrapping wire around an iron nail as shown in the diagram.

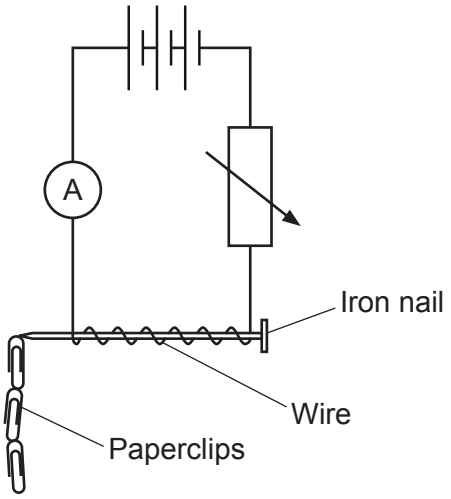

The student investigates how the current in the wire affects the magnetic field of the solenoid.

(a) Suggest why the student uses an iron nail in the centre of the solenoid.

..... **[1]**

(b)* The student varies the current in the wire and uses the number of paperclips picked up by the solenoid as a measure of the strength of the magnetic field.

The results of this experiment are shown in the table.

Current (A)	Number of paperclips picked up
1	5
2	11
3	17
4	22
5	28
6	32

© OCR 2023

Describe the trend shown by these results.

Suggest what the student should have done in their method to obtain accurate and valid results.

.....

.....

.....

.....

.....

.....

.....

.....

.....

.....

.....

..... **[6]**

© OCR 2023

22 An electrostatic dust precipitator uses static electricity to remove smoke particles from gases before the gases are released from a chimney in a factory.

The diagram shows an electrostatic dust precipitator in a chimney.

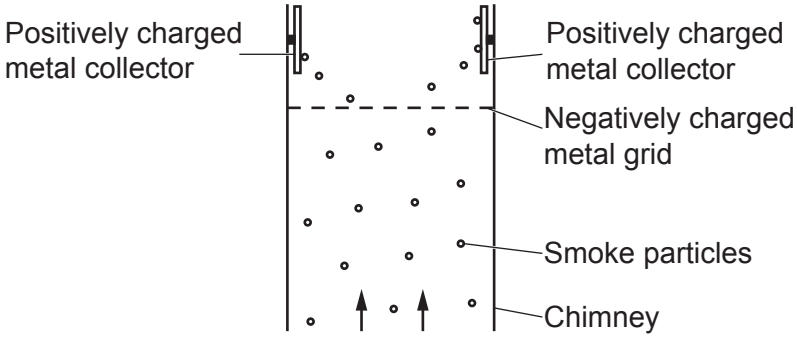

The smoke particles at the bottom of the chimney initially have a neutral charge. The smoke particles move upwards and pass through a negatively charged metal grid in the chimney.

(a) **(i)** Explain how the precipitator removes the smoke particles when the gases move upwards through the chimney.

Use ideas about charges.

.....

.....

.....

.....

..... **[3]**

(ii) Suggest why many scientists think these precipitators should be fitted to all factory chimneys.

.....

..... **[1]**

(b) The precipitator uses high voltages.

Why are high voltages dangerous?

.....

..... **[1]**

(c) The collectors receive 360 C of charge every two minutes.

Calculate the current in the collectors.

Use the equation: charge flow = current × time

Current = ... A **[3]**

© OCR 2023

23 A medical freezer is used to keep vaccines cool.

(a) **(i)** Calculate the energy required by the freezer to cool 0.50 kg of solid vaccines from –5 °C to –35 °C.

Assume the specific heat capacity of the vaccines is 1900 J / kg °C.

Use the Equation Sheet.

Energy = ... J **[2]**

(ii) It takes 5 minutes for the freezer to cool the vaccines.

Calculate the power of the freezer.

Use the Equation Sheet.

Power = ... W **[3]**

(iii) Suggest **two** reasons why the actual power of the freezer will be greater than that calculated in part **(a)(ii)**.

1 .....

.....

2 .....

.....

[2]

© OCR 2023

(b) **(i)** When the vaccine is used by doctors, it has to be changed back into a liquid. The temperature of the vaccine is first raised to its melting point but it remains as a solid.

Explain **two** reasons why more energy is needed to change the solid vaccine into a liquid at its melting point.

1 .....

.....

2 .....

.....
[2]

(ii) Calculate the number of 5 mg vaccine doses which can be melted using 6800 J of energy.

Assume the specific latent heat of fusion for the vaccines is 340 000 J / kg.

Use the Equation Sheet.

Number of vaccine doses = ... **[6]**

END OF QUESTION PAPER

© OCR 2023

ADDITIONAL ANSWER SPACE

If additional space is required, you should use the following lined page(s). The question number(s) must be clearly shown in the margin(s).

© OCR 2023

© OCR 2023

© OCR 2023

OCR
Oxford Cambridge and RSA

Copyright Information

OCR is committed to seeking permission to reproduce all third-party content that it uses in its assessment materials. OCR has attempted to identify and contact all copyright holders whose work is used in this paper. To avoid the issue of disclosure of answer-related information to candidates, all copyright acknowledgements are reproduced in the OCR Copyright Acknowledgements Booklet. This is produced for each series of examinations and is freely available to download from our public website (www.ocr.org.uk) after the live examination series.

If OCR has unwittingly failed to correctly acknowledge or clear any third-party content in this assessment material, OCR will be happy to correct its mistake at the earliest possible opportunity.

For queries or further information please contact The OCR Copyright Team, The Triangle Building, Shaftesbury Road, Cambridge CB2 8EA.

OCR is part of Cambridge University Press & Assessment, which is itself a department of the University of Cambridge.

© OCR 2023