Oxford Cambridge and RSA

Friday 16 June 2023 – Morning

GCSE (9–1) Physics A (Gateway Science)

J249/02 Paper 2 (Foundation Tier)

Time allowed: 1 hour 45 minutes

You must have:
- a ruler (cm/mm)
- the Equation Sheet for GCSE (9–1) Physics A (inside this document)

You can use:
- a scientific or graphical calculator
- an HB pencil

F

Please write clearly in black ink. **Do not write in the barcodes.**

Centre number | | | | | | Candidate number | | | | |

First name(s) _____

Last name _____

INSTRUCTIONS
- Use black ink. You can use an HB pencil, but only for graphs and diagrams.
- Write your answer to each question in the space provided. If you need extra space use the lined pages at the end of this booklet. The question numbers must be clearly shown.
- Answer **all** the questions.
- Where appropriate, your answer should be supported with working. Marks might be given for using a correct method, even if your answer is wrong.

INFORMATION
- The total mark for this paper is **90**.
- The marks for each question are shown in brackets **[ ]**.
- Quality of extended response will be assessed in questions marked with an asterisk (*).
- This document has **28** pages.

ADVICE
- Read each question carefully before you start your answer.

© OCR 2023 [601/8651/3]
DC (PQ/SG) 328442/3
OCR is an exempt Charity

Section A

You should spend a **maximum** of **30 minutes** on this section.

Write your answer to each question in the box provided.

1 The domestic supply in the UK is a.c.

What does a.c. stand for?

A Alternative charge

B Alternating current

C Amplitude charge

D Amplitude current

Your answer ☐ **[1]**

2 An oscilloscope is used to display a wave.

How many complete waves are shown on the oscilloscope screen?

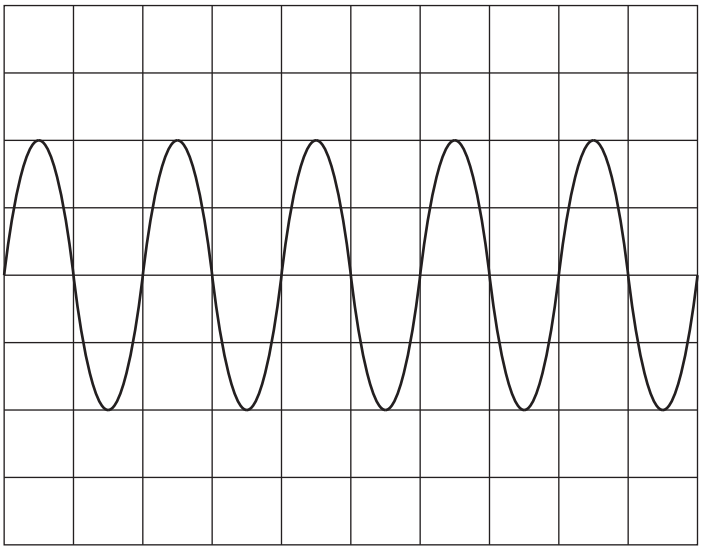

A 2

B 4

C 5

D 10

Your answer ☐ **[1]**

© OCR 2023

3 The diagram shows a ray of light hitting a rectangular glass block.

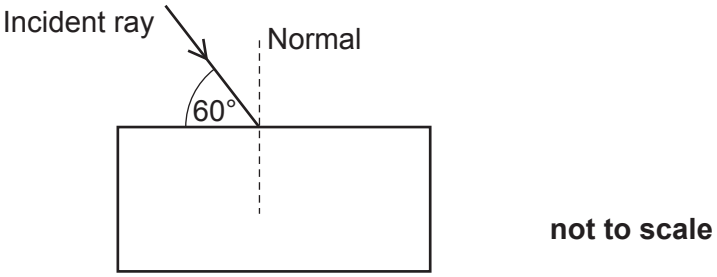

What is the angle between the normal line and the incident ray?

A 30°

B 60°

C 90°

D 120°

Your answer ☐ **[1]**

4 This diagram shows an electron in the second energy level in an atom.

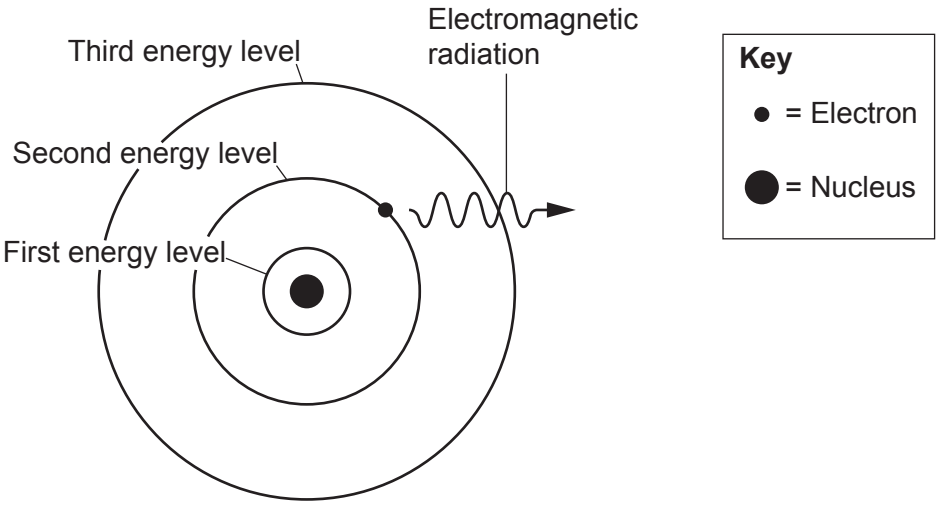

What happens to the electron when it emits electromagnetic radiation?

A It becomes excited.

B It is lost from the atom.

C It moves to the first energy level.

D It moves to the third energy level.

Your answer ☐ **[1]**

© OCR 2023

5 This diagram shows the wiring inside an electric plug.

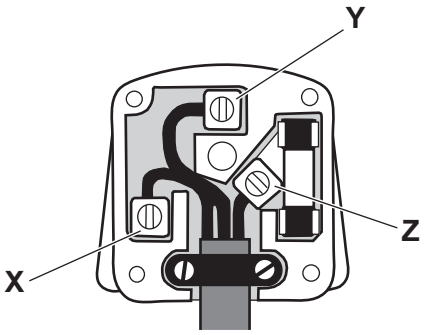

Which row shows the correct names of the three pins labelled **X**, **Y** and **Z**?

	X	**Y**	**Z**
A	earth	neutral	live
B	live	neutral	earth
C	neutral	earth	live
D	neutral	live	earth

Your answer ☐ **[1]**

6 An electric lawnmower has this information.

The potential difference is 230 V. The current is 7.0 A.

What is the power of the electric lawnmower?

Use the equation: power = potential difference × current

A 0.030 W

B 32.9 W

C 230 W

D 1610 W

Your answer ☐ **[1]**

© OCR 2023

7 The mass of an aluminium block is 1.5 kg. Its temperature changes by 5 °C.

What is the change in thermal energy of the aluminium block?

The specific heat capacity of aluminium is 920 J / kg °C.

Use the equation:
change in thermal energy = mass × specific heat capacity × change in temperature

A 123 J

B 276 J

C 3070 J

D 6900 J

Your answer ☐ **[1]**

8 The velocity–time graph shows how the velocity of four different vehicles changes.

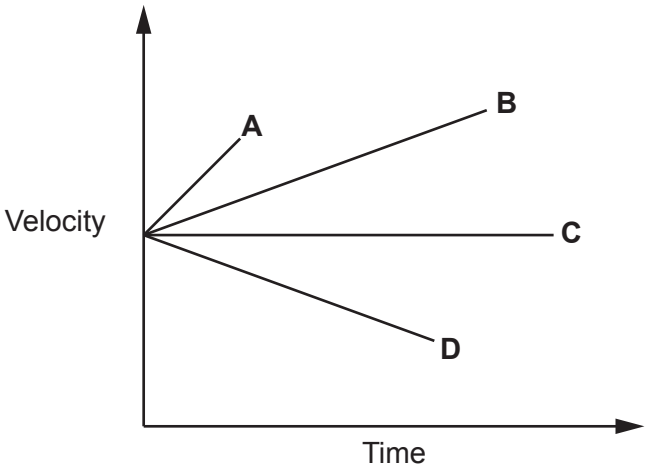

Which vehicle has the **greatest** acceleration?

Your answer ☐ **[1]**

© OCR 2023

9 Energy use in the home can be measured in kW h.

How do you calculate energy use in kW h?

A Divide power in kilowatts by time in hours.

B Divide power in watts by time in seconds.

C Multiply power in kilowatts by time in hours.

D Multiply power in watts by time in seconds.

Your answer ☐ **[1]**

10 A student places a blue filter and a red filter in front of a source of white light.

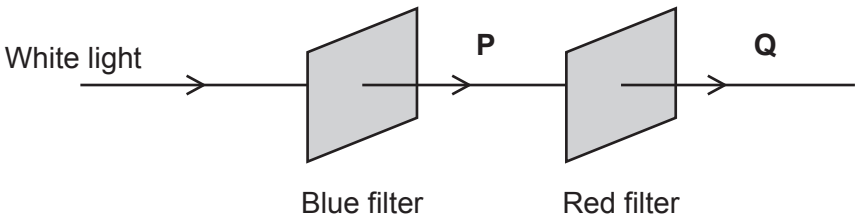

Which row is correct?

	Light seen at P	Light seen at Q
A	blue	no light
B	blue	green
C	red	no light
D	red	green

Your answer ☐ **[1]**

© OCR 2023

11 An astronomer observes that light from a distant galaxy is **red-shifted** compared to the same wavelength of light observed on the Earth.

Which row correctly describes the astronomer's conclusion?

	Observed wavelength of light from the galaxy	**Movement of the galaxy**
A	longer than on the Earth	moving away from the Earth
B	longer than on the Earth	moving towards the Earth
C	shorter than on the Earth	moving away from the Earth
D	shorter than on the Earth	moving towards the Earth

Your answer ☐ **[1]**

12 The symbol for an isotope of hydrogen is $^{3}_{1}H$.

What is the correct diagram of the nucleus of this isotope of hydrogen?

Key

= Neutron

= Proton

A

B

C

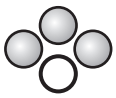

D

Your answer ☐ **[1]**

© OCR 2023

13 In May 2021, SpaceX launched sixty Starlink satellites into our solar system.

Which row correctly describes objects in our solar system?

	Natural satellite of the Earth	**Artificial satellite**
A	Mars	Starlink
B	the Moon	Starlink
C	Starlink	Mars
D	Starlink	the Moon

Your answer ☐ **[1]**

14 A sound wave travels from air into water.

Which quantity stays the **same**?

A Amplitude

B Frequency

C Speed

D Wavelength

Your answer ☐ **[1]**

© OCR 2023

15 Ultrasound pulses can be used to measure the depth of the seabed.

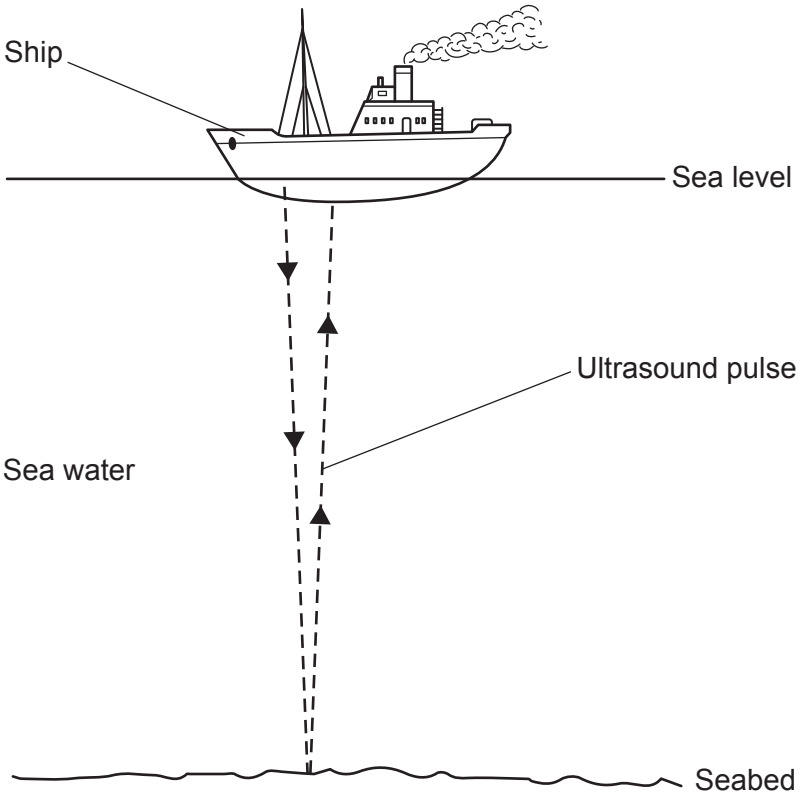

The speed of ultrasound in sea water is 1500 m / s.

The seabed is 3600 m below sea level.

An ultrasound pulse is emitted from the ship.

How long is it before the ultrasound pulse **returns** to the ship?

Use the equation: distance travelled = speed × time

A 0.40 s

B 0.80 s

C 2.4 s

D 4.8 s

Your answer ☐ **[1]**

© OCR 2023

Section B

16 This question is about the life cycle of the Sun.

(a) **(i)** Draw lines to connect each **stage** in the life cycle of the Sun with its correct **description**.

Stage	Description
nebula	A star producing no radiation formed from a white dwarf.
red giant	A low temperature star with a diameter much larger than the Sun.
white dwarf	A mass of interstellar dust and gas.
black dwarf	A star that has used most of its nuclear fuel and has collapsed.

[2]

(ii) Which stage in the lifecycle of the Sun is missing from part **(a)(i)**?

Put a (ring) around the correct option.

black hole **main sequence star** **neutron star**

[1]

(b) **(i)** What causes a nebula to collapse to form a star?

Put a (ring) around the correct option.

fission **fusion** **gravity** **radiation**

[1]

(ii) Complete the sentence to describe the forces acting in the Sun at the current stage in its lifecycle.

Use words from the list.

equal to	**greater than**	**less than**

The gravitational force is …… the outward force.

[1]

© OCR 2023

(c) The diagrams show possible nuclear processes for fission and fusion.

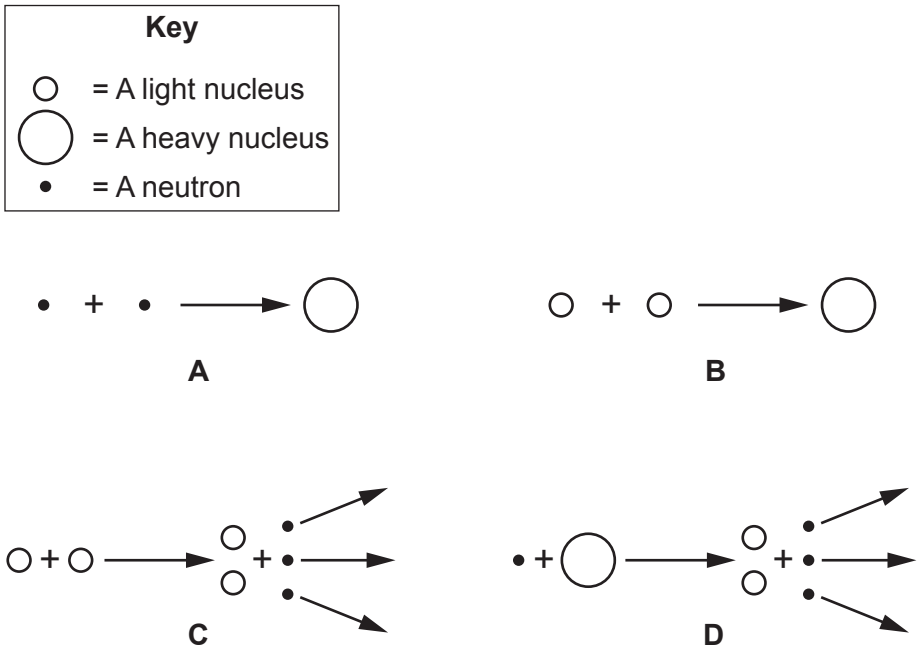

(i) Which diagram shows nuclear fusion?

Answer = ... **[1]**

(ii) Which diagram shows nuclear fission?

Answer = ... **[1]**

© OCR 2023

17 Corrugated cardboard can be used as an insulator around a beaker.

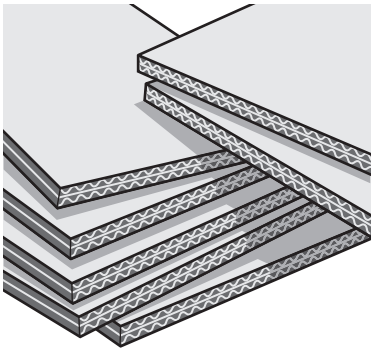

Student **A** does an experiment to investigate how the thickness of corrugated cardboard wrapped around a beaker affects the time it takes for hot water in the beaker to cool down.

The diagrams show how student **A** starts the experiment.

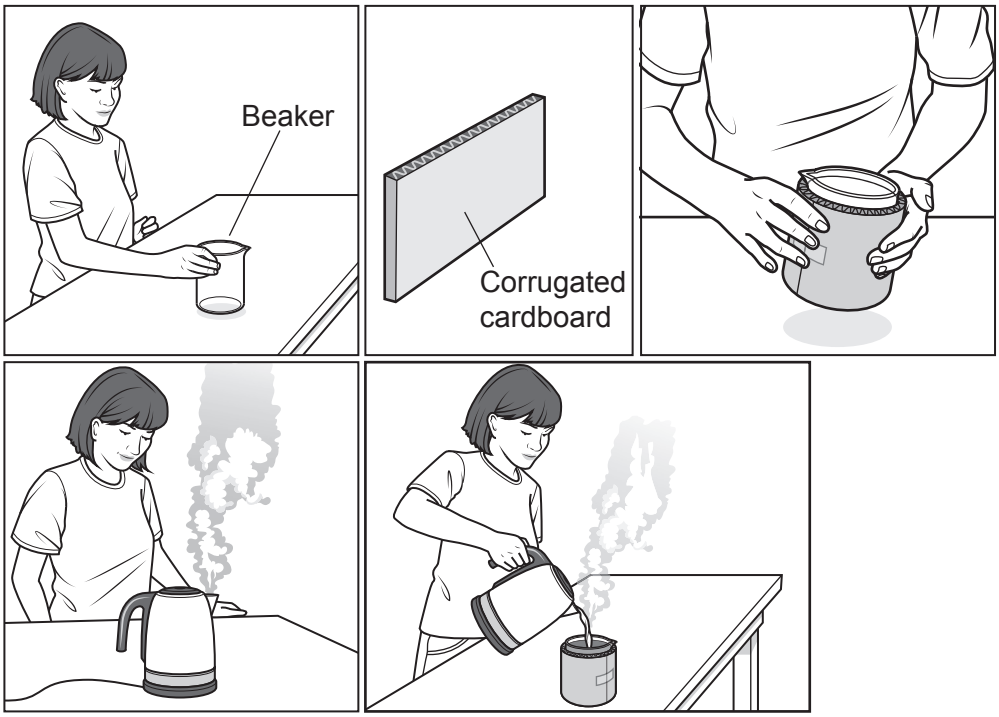

© OCR 2023

(a)* Describe how student **A** does the experiment.

You should write about:
- the **extra** equipment student **A** needs and what this equipment measures
- student **A**'s method
- a variable that needs to be controlled.

.....

.....

.....

.....

.....

.....

.....

.....

.....

.....

.....

..... **[6]**

© OCR 2023

(b) Student **B** does the same experiment using the same method as student **A**.

The table shows the students' results when there is **no** insulation around the beaker.

Time (min)	Temperature (°C)	
	Student A	Student B
0	80	80
1	75	76
2	71	71
3	67	68
4	65	65
5	63	63

(i) Describe the trend shown by the students' results.

.....

..... **[1]**

(ii) Describe how the table shows the students' results are reproducible.

.....

..... **[1]**

(iii) The student plots a graph of temperature against time.

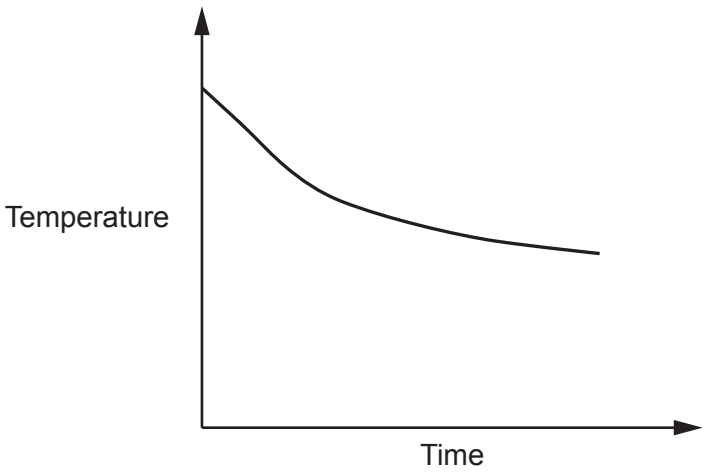

State **two** reasons why the graph does **not** show that the temperature is directly proportional to time.

1 .....

2 .....

[2]

© OCR 2023

BLANK PAGE

PLEASE DO NOT WRITE ON THIS PAGE

© OCR 2023

18 The diagrams show how electricity was generated in the UK in 2019 and in 2020.

2019

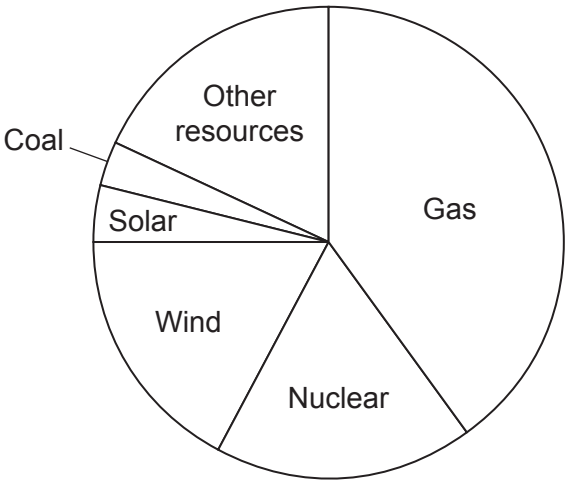

2020

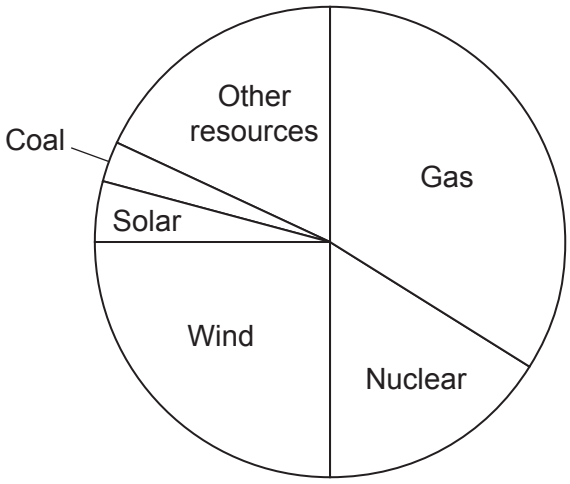

(a) Which **two** energy resources generated the **least** electricity in **2019**?

..... and ..... **[2]**

(b) Estimate the percentage of electricity generated using wind in **2020**.

Electricity generated using wind = ... % **[3]**

(c) **Two** energy resources showed a significant change between 2019 and 2020.

Give the names of these **two** energy resources.

1 .....

2 .....

[2]

© OCR 2023

(d) From 2019 to 2020, the use of solar power changed from 3.9% to 4.2%.

Calculate the percentage change in the use of solar power.

Use the equation:

$$\text{percentage change} = \frac{(\text{new value} - \text{old value})}{\text{old value}} \times 100\%$$

Give your answer to **1** decimal place.

Percentage change = ... % **[3]**

(e) Since 2013, the use of coal power stations to generate electricity has decreased.

(i) Suggest why.

.....

..... **[1]**

(ii) In 2020, a news article stated:

'The UK started up an old coal power station on Monday to meet the demand for electricity. The national grid confirmed coal was providing 3% of the UK's power.'

Suggest **two** reasons why the national grid had to use a **coal** power station to meet demand for electricity.

1 .....

.....

2 .....

.....

[2]

© OCR 2023

19 A star like the Sun emits radiation as electromagnetic waves.

(a) Part of the electromagnetic spectrum is shown in the table.

radio	microwaves	infrared	visible			

(i) Complete the table to show the electromagnetic waves in order of **decreasing** wavelength.

Use the words in the list.

gamma-rays	**ultra-violet**	**X-ray**

[2]

(ii) Complete the sentence about electromagnetic waves in space.

Use the words in the list.

decreases	**increases**	**stays the same**

As the wavelength of an electromagnetic wave increases, the frequency

..... .

[1]

(b) **Fig. 19.1** shows how the intensity of the Sun's radiation changes with wavelength.

Fig. 19.1

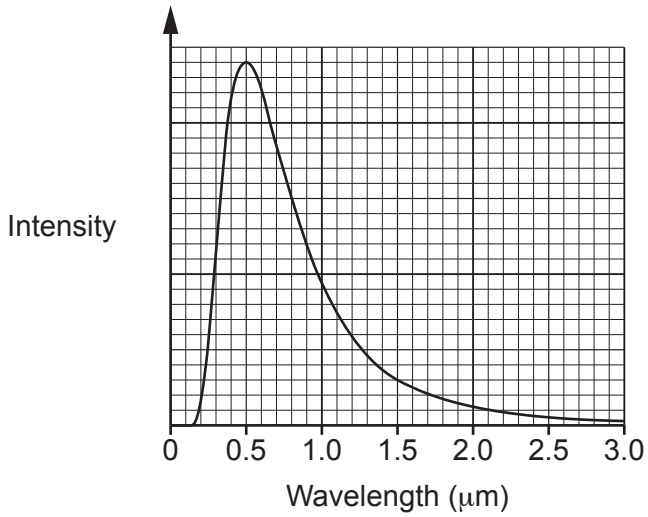

Use **Fig. 19.1** to find the wavelength of the Sun's radiation at **maximum** intensity.

Show your working on **Fig. 19.1**.

Wavelength = ... μm **[2]**

© OCR 2023

(c) In 1965, two scientists detected electromagnetic waves coming from space.

Fig. 19.2 shows the graph for these electromagnetic waves.

Fig. 19.2

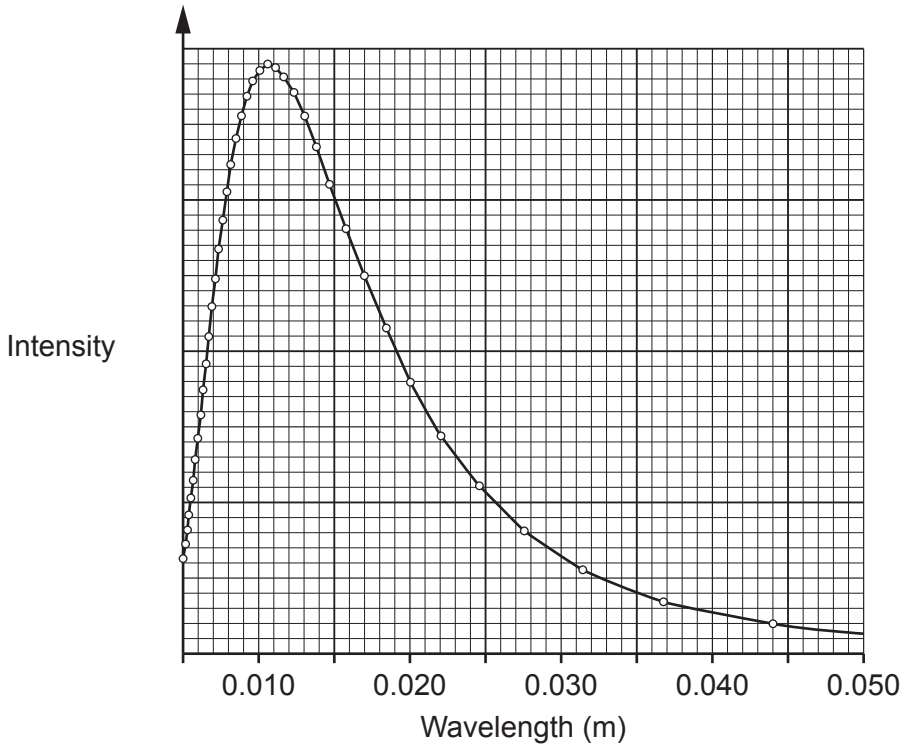

The table shows the wavelengths of some different electromagnetic waves.

Electromagnetic waves	Wavelength range (m)
radio	> 0.3
microwaves	0.000 025 – 0.3
infrared	0.000 000 75 – 0.000 025
visible light	0.000 0004 – 0.000 000 75

(i) Use the table and **Fig. 19.2** to name the electromagnetic wave at maximum intensity.

..... **[1]**

(ii) Which theory about the universe does the radiation for **(c)(i)** provide evidence for?

..... **[1]**

© OCR 2023

20 This question is about energy transfers.

A car with a mass of 800 kg rolls down a hill with its engine switched off.

(a) The hill is 12 m high.

The gravitational field strength is 10 N / kg.

Calculate the potential energy of the car at the top of the hill.

Use the equation: potential energy = mass × height × gravitational field strength

Potential energy = ... J **[2]**

(b) The speed of the car at the bottom of the hill is 10 m / s.

Calculate the kinetic energy of the car at the bottom of the hill.

Use the equation: kinetic energy = $\frac{1}{2}$ × mass × $(\text{speed})^2$

Kinetic energy = ... J **[2]**

(c) The kinetic energy at the bottom of the hill is **less** than the potential energy at the top of the hill.

Explain why.

Write about energy stores.

.....

.....

.....

..... **[2]**

© OCR 2023

(d) The test is repeated with a different car.

The potential energy of this car at the top of the hill is 120 000 J.
The kinetic energy of this car at the bottom of the hill is 48 000 J.

Calculate the efficiency of the transfer of energy from the potential store to the kinetic store.

Use the equation: efficiency = $\frac{\text{useful output energy transfer}}{\text{input energy transfer}}$

Efficiency = ... **[2]**

© OCR 2023

21 The bar chart shows thinking distances and braking distances for a car moving at different speeds.

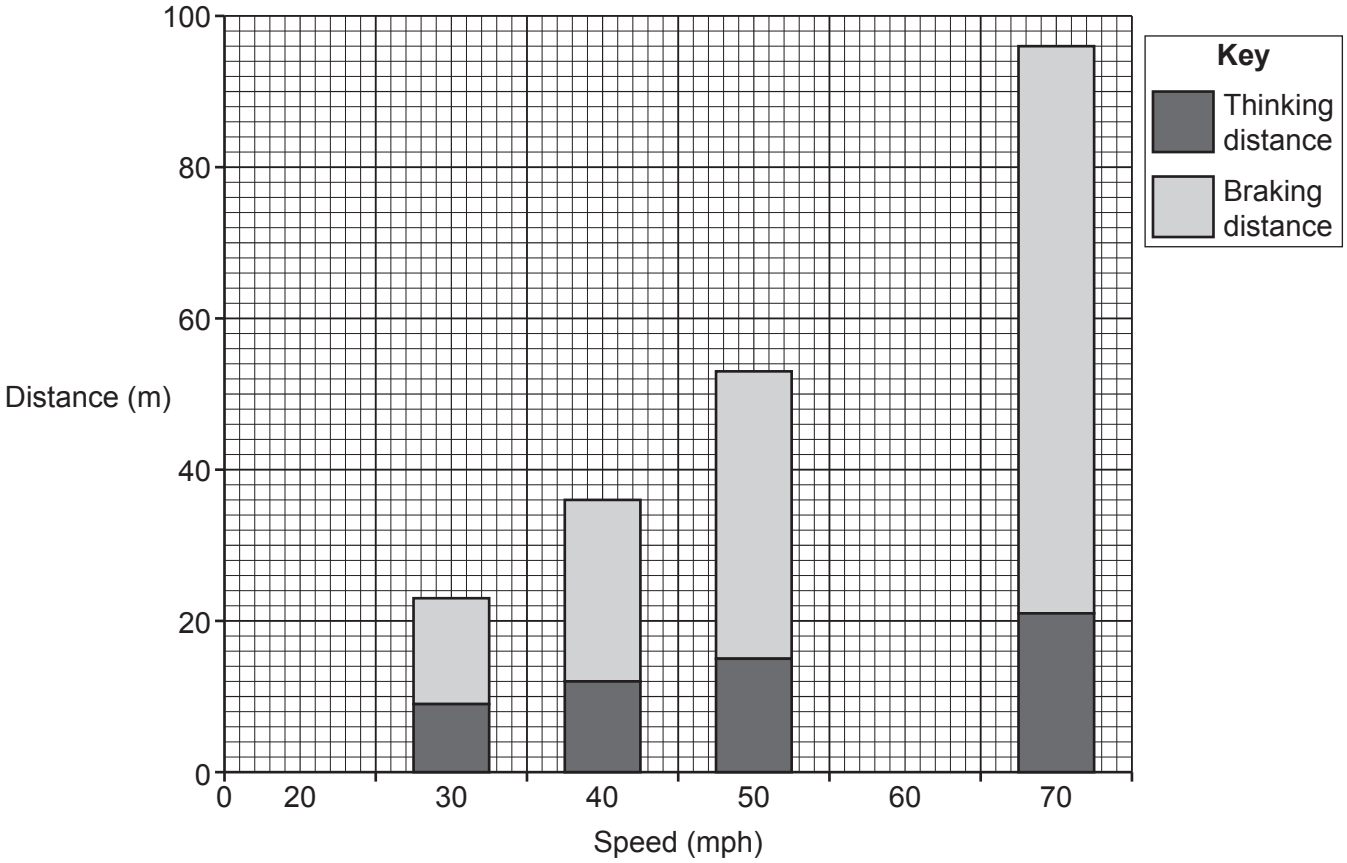

(a) For a car moving at 20 mph:
- The thinking distance is 6 m.
- The braking distance is 6 m.

Complete the bar chart for a car moving at 20 mph. **[2]**

(b) Use the bar chart to estimate the thinking distance and braking distance for a car moving at 60 mph.

Thinking distance = ... m

Braking distance = ... m
[2]

(c) Give the name of the distance represented by the **total** height of each bar.

..... **[1]**

© OCR 2023

(d) Complete the table below to describe how each factor changes the thinking distance and braking distance.

Use the words in the list.

decreases	**increases**	**no effect**

Factor	Thinking distance	Braking distance
Drinking alcohol	.....	.....
Higher speed	.....	.....
Wet road	.....	.....

[3]

(e) **(i)** A car decelerates to a stop. The braking force is 5600 N.

The braking distance is 20 m.

Calculate the work done by the brakes. Include the correct unit.

Use the equation: work done = force × distance

Work done = ... Unit ..... **[3]**

(ii) A double-decker bus is travelling at the same speed as the car.

The double-decker bus stops in the same distance as the car.

Suggest why the double-decker bus needs a larger braking force than the car.

.....

..... **[1]**

© OCR 2023

22 **(a)** A student shines three parallel rays of red light at different glass objects. **Fig. 22.1** shows the glass objects.

Fig. 22.1

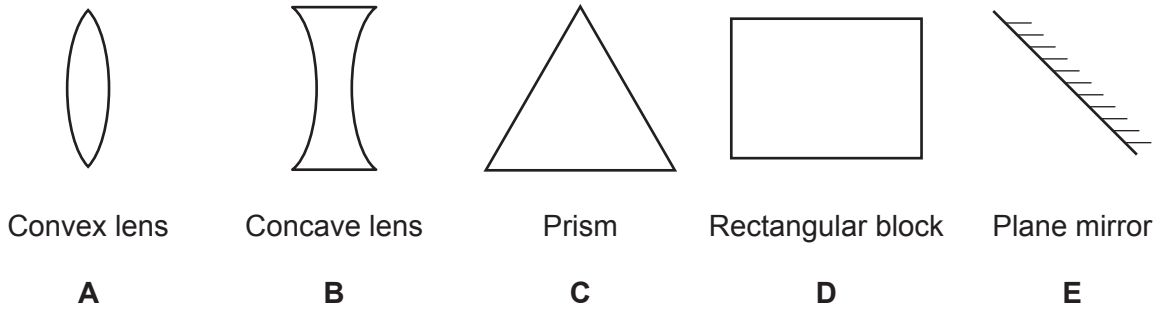

The student draws ray diagrams to show what happens to the three parallel rays of red light.

Write **one** letter in each box in **Fig. 22.2** to identify which glass object produces that ray diagram.

Fig. 22.2

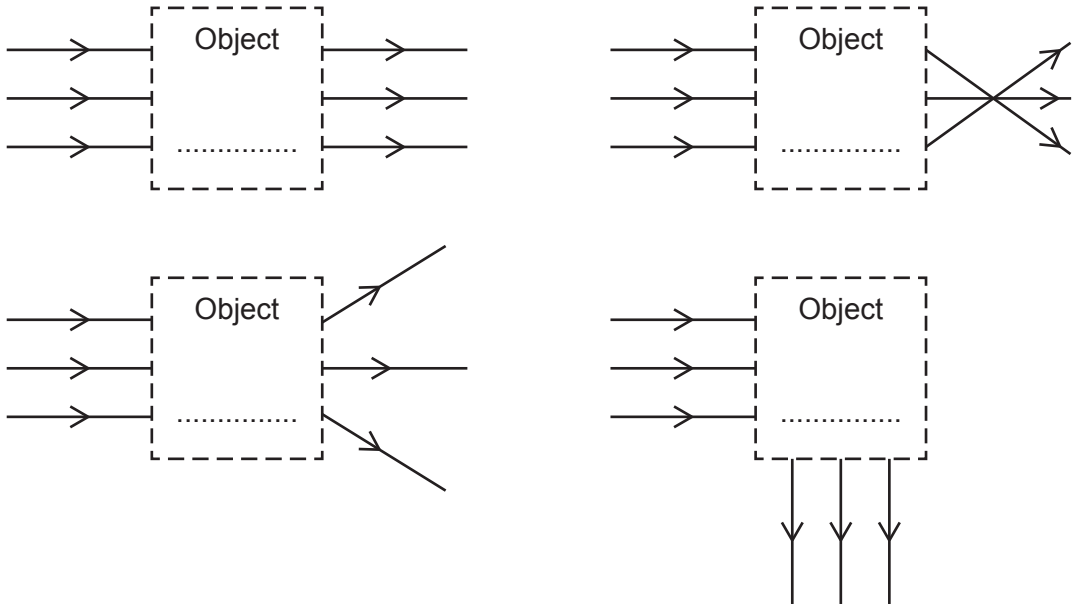

[4]

© OCR 2023

(b) The wavelength of red light in glass is 4.33×10^{-7} m.

The speed of red light in glass is 2.0×10^{8} m/s.

Calculate the frequency of the red light in glass.

Use the equation: wave speed = frequency × wavelength

Give your answer to **2** significant figures.

Frequency = ... Hz **[4]**

(c) A football player wears a red shirt with a white number 3 on the back.

(i) What is the colour of the shirt and the number when viewed under **blue** light?

Colour of shirt .....

Colour of number .....
[1]

(ii) Another football player says, 'Under **red** light, I cannot read the number on the shirt.'

Explain why.

.....

..... **[1]**

© OCR 2023

23 An underground water pipe has a leak, as shown in the diagram.

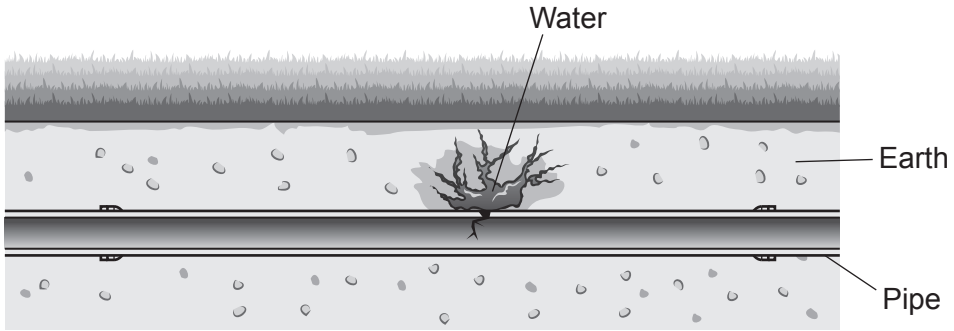

A tracer called sodium-24 is used to detect leaks in underground pipes.

(a) **(i)** Sodium-24 has a half-life of 15 hours.

Give **two** reasons why this is useful.

1 .....

.....

2 .....

.....

[2]

(ii) Sodium-24 emits beta and gamma radiation.

Explain why this makes sodium-24 a good tracer.

.....

..... **[1]**

(iii) Sodium-24 decays to form a stable isotope.

Explain why this is important.

.....

..... **[1]**

(b) The tracer is monitored using a gamma radiation detector.

How is the location of the leak found?

.....

.....

.....

..... **[2]**

© OCR 2023

(c) A 12 mg mass of sodium-24 is added to water.

The half-life of sodium-24 is 15 hours.

What mass of sodium-24 remains in the water after 30 hours?

Mass remaining = ... mg **[2]**

END OF QUESTION PAPER

© OCR 2023

ADDITIONAL ANSWER SPACE

If additional space is required, you should use the following lined page(s). The question number(s) must be clearly shown in the margin(s).

OCR
Oxford Cambridge and RSA

Copyright Information

OCR is committed to seeking permission to reproduce all third-party content that it uses in its assessment materials. OCR has attempted to identify and contact all copyright holders whose work is used in this paper. To avoid the issue of disclosure of answer-related information to candidates, all copyright acknowledgements are reproduced in the OCR Copyright Acknowledgements Booklet. This is produced for each series of examinations and is freely available to download from our public website (www.ocr.org.uk) after the live examination series.

If OCR has unwittingly failed to correctly acknowledge or clear any third-party content in this assessment material, OCR will be happy to correct its mistake at the earliest possible opportunity.

For queries or further information please contact The OCR Copyright Team, The Triangle Building, Shaftesbury Road, Cambridge CB2 8EA.

OCR is part of Cambridge University Press & Assessment, which is itself a department of the University of Cambridge.

© OCR 2023