OCR
Oxford Cambridge and RSA

H

Thursday 23 June 2022 – Morning

GCSE (9–1) Physics A (Gateway Science)

J249/04 Paper 4 (Higher Tier)

Time allowed: 1 hour 45 minutes

You must have:
- a ruler (cm/mm)
- the Data Sheet for GCSE (9–1) Physics A (inside this document)

You can use:
- a scientific or graphical calculator
- an HB pencil

Please write clearly in black ink. **Do not write in the barcodes.**

Centre number | | | | | | Candidate number | | | | |

First name(s) _____

Last name _____

INSTRUCTIONS
- Use black ink. You can use an HB pencil, but only for graphs and diagrams.
- Write your answer to each question in the space provided. If you need extra space use the lined pages at the end of this booklet. The question numbers must be clearly shown.
- Answer **all** the questions.
- Where appropriate, your answer should be supported with working. Marks might be given for using a correct method, even if your answer is wrong.

INFORMATION
- The total mark for this paper is **90**.
- The marks for each question are shown in brackets **[ ]**.
- Quality of extended response will be assessed in questions marked with an asterisk (*).
- This document has **32** pages.

ADVICE
- Read each question carefully before you start your answer.

© OCR 2022 [601/8651/3]
DC (KN/JG) 300353/8
OCR is an exempt Charity

SECTION A

Answer **all** the questions.

You should spend a maximum of 30 minutes on this section.

Write your answer to each question in the box provided.

1 Which row describes the walls of a building with the **lowest** rate of cooling?

	Thickness of walls	Thermal conductivity of walls
A	thick	high
B	thick	low
C	thin	high
D	thin	low

Your answer ☐ **[1]**

2 The diagram shows waves that are made in a pool of water.

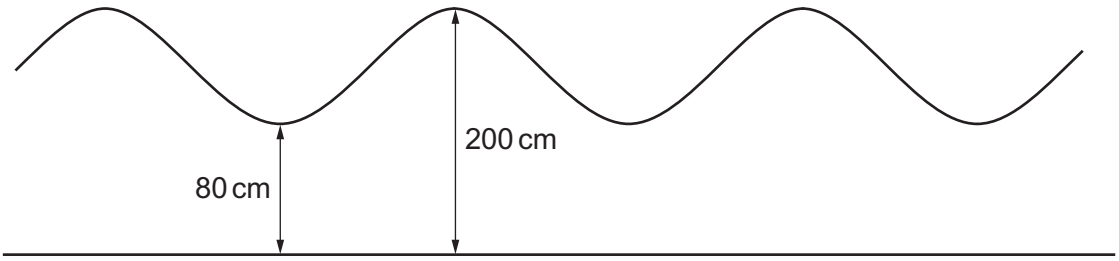

What is the amplitude of the waves?

A 60 cm

B 80 cm

C 120 cm

D 200 cm

Your answer ☐ **[1]**

© OCR 2022

3 Power can be measured in watts (W) or milliwatts (mW).

What is 1.5 mW converted into W?

A 1.5×10^{-6} W

B 1.5×10^{-3} W

C 1.5×10^{3} W

D 1.5×10^{6} W

Your answer ☐ **[1]**

4 A radioactive source has a count-rate of 64 counts per minute (cpm).
The half-life of the radioactive source is 10 minutes.

What is the count-rate of the radioactive source after 20 minutes?

A 8 cpm

B 16 cpm

C 32 cpm

D 48 cpm

Your answer ☐ **[1]**

© OCR 2022

5 The diagram shows four possible paths for a ray of light from an object passing through a concave lens.

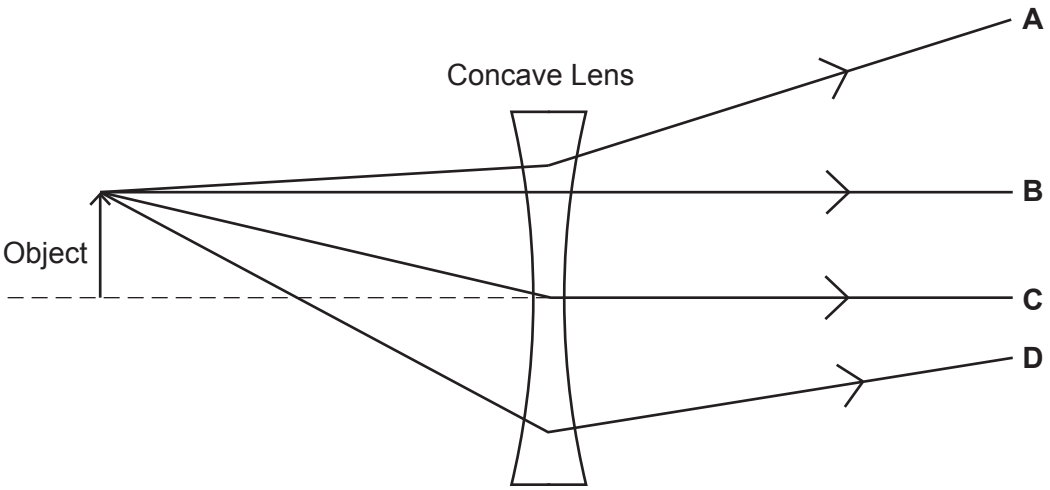

Which letter shows the correct path of the ray?

Your answer ☐ **[1]**

6 A student investigates absorption of coloured light in a dark laboratory.

The student shines green light onto a blue object.

What colour does the object appear?

A Black

B Blue

C Cyan

D Green

Your answer ☐ **[1]**

© OCR 2022

7 The diagram shows food being heated in a microwave oven.

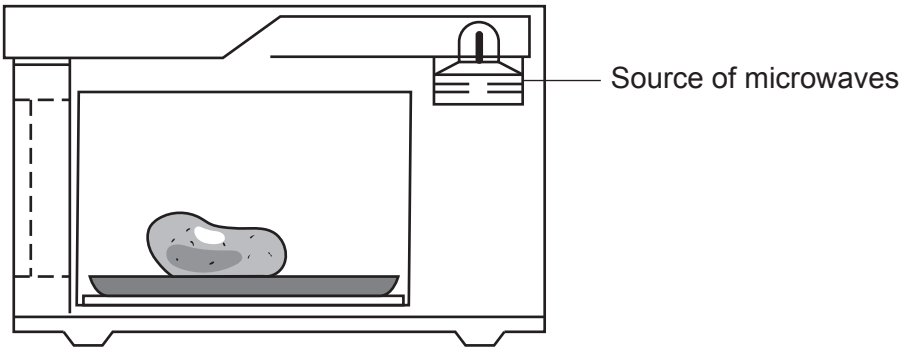

Read these statements about the microwave oven:

1. The microwaves ..... energy.

2. The food's temperature increases because it ..... the microwaves.

	Statement 1	Statement 2
A	refract	reflects
B	transfer	reflects
C	refract	absorbs
D	transfer	absorbs

Which row gives the correct words to complete the statements?

Your answer ☐ **[1]**

© OCR 2022

8 The diagram shows a cross-section of the Earth.

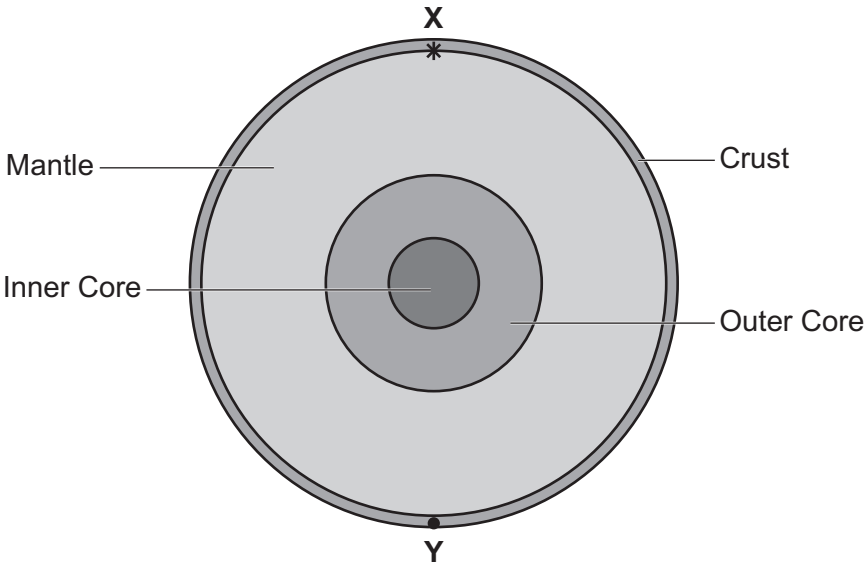

An earthquake takes place at point **X**.

Which type(s) of seismic waves would be detected at point **Y**?

	P-Waves	**S-Waves**
A	no	no
B	no	yes
C	yes	no
D	yes	yes

Your answer ☐ **[1]**

9 The mass of a block of ice at a temperature of 0°C is 2 kg.
The specific latent heat of ice is 3.34×10^5 J/kg.

What amount of energy is needed to melt the block of ice?
Use the Data Sheet.

A 1.67×10^2 J

B 1.67×10^5 J

C 6.68×10^5 J

D 6.68×10^8 J

Your answer ☐ **[1]**

© OCR 2022

10 A hot object emits radiation.
The graph shows how the intensity of the radiation varies with wavelength.

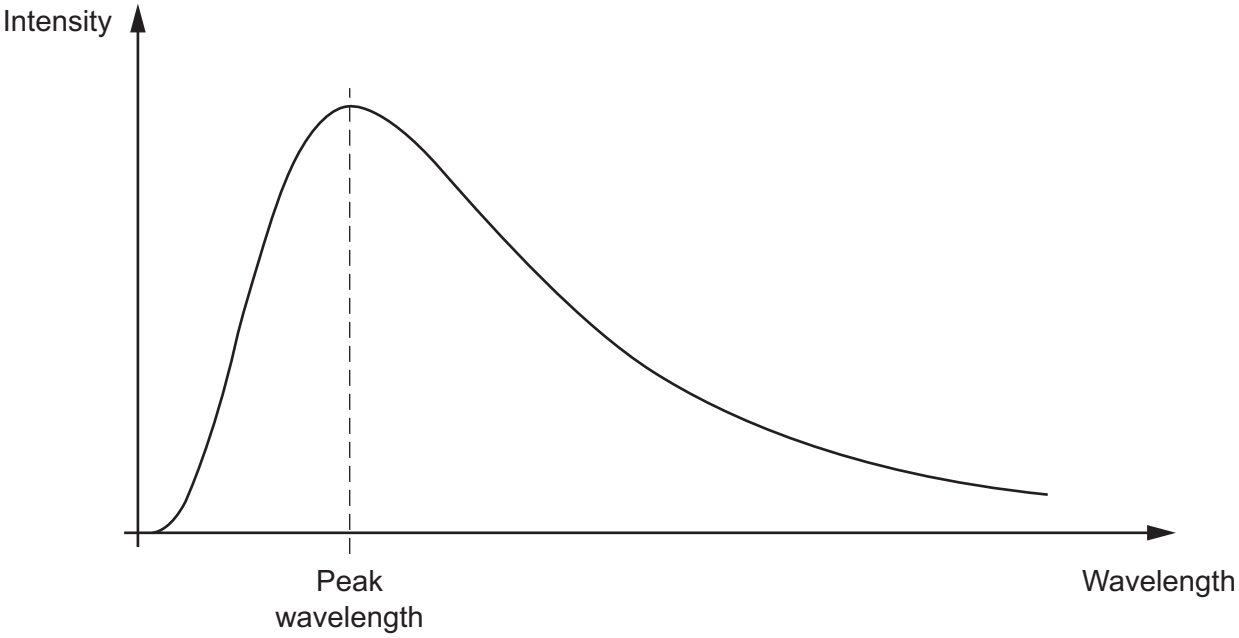

The temperature of the object **increases**.

Which row describes what happens to the peak wavelength and intensity of the radiation?

	Peak Wavelength	**Intensity of the radiation**
A	decreases	increases for all wavelengths
B	decreases	increases for the peak wavelength only
C	increases	increases for all wavelengths
D	increases	increases for the peak wavelength only

Your answer ☐ **[1]**

© OCR 2022

11 A student uses a ray box to shine a ray of light through a glass block.

Which diagram shows a correct path for the ray?

A

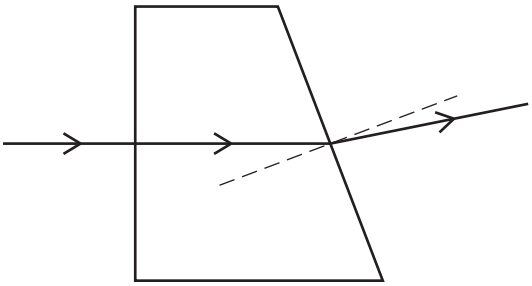

B

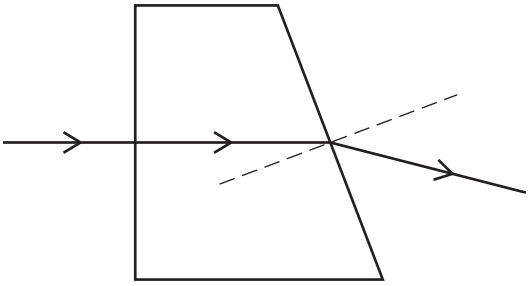

C

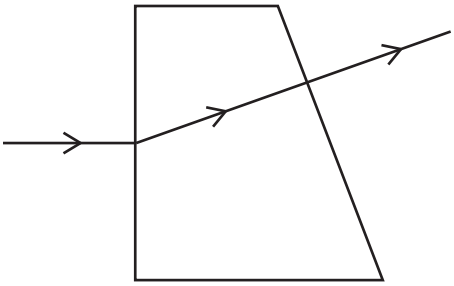

D

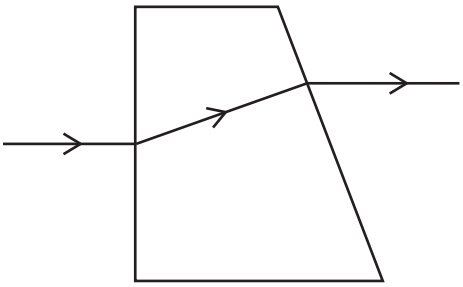

Your answer ☐ **[1]**

© OCR 2022

12 A student models nuclear fission using this process:

Step 1

- A uranium nucleus absorbs one neutron.
- The uranium nucleus splits releasing **three** neutrons.

The diagram shows what happens in **step 1** of this process.

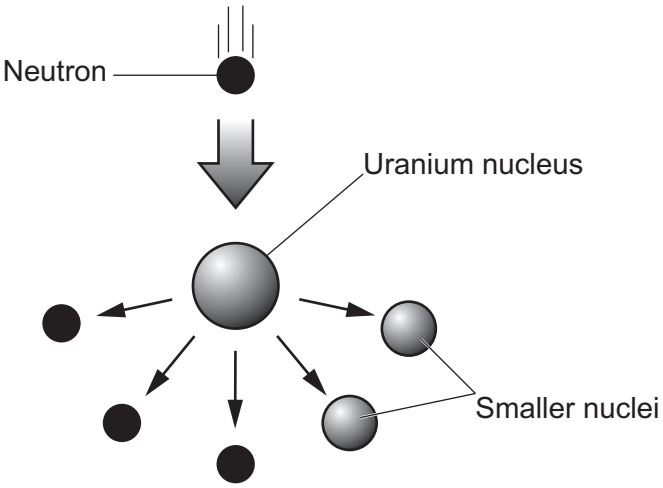

The three neutrons can each repeat this process again for step 2 and step 3. How many neutrons will be released after step 3?

A 6

B 9

C 18

D 27

Your answer ☐ **[1]**

© OCR 2022

13 Room **Y** and Room **Z** are identical rooms. No energy can escape from the rooms.
The temperature of each room is increased by using a different heater.

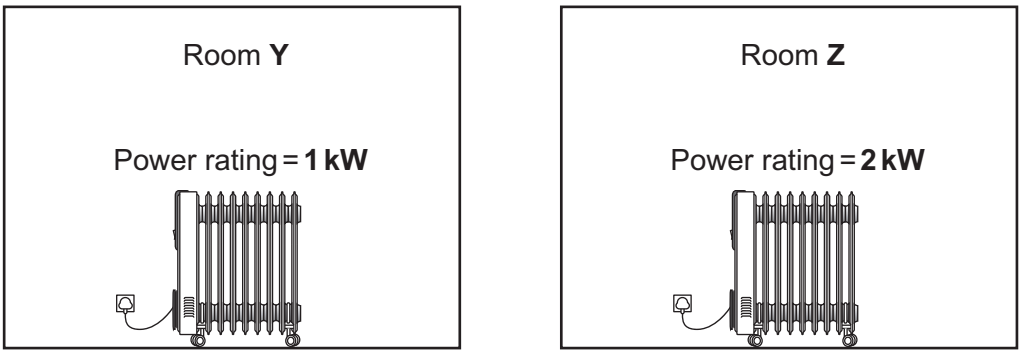

The heater in each is turned on for **30 minutes**.

E_Y is the increase in the thermal energy store of Room **Y**.
E_Z is the increase in the thermal energy store of Room **Z**.

Which row of the table is correct?

	Change in thermal energy stores
A	$E_Z = E_Y/2$
B	$E_Z = E_Y$
C	$E_Z = 2E_Y$
D	$2E_Z = E_Y$

Your answer ☐ **[1]**

14 The energy stored in a stretched spring is 5 J.

What is the energy stored in the spring when the extension doubles?
Use the Data Sheet.

A 5 J

B 10 J

C 20 J

D 25 J

Your answer ☐ **[1]**

© OCR 2022

15 The graph shows how the speed of a car varies with time.

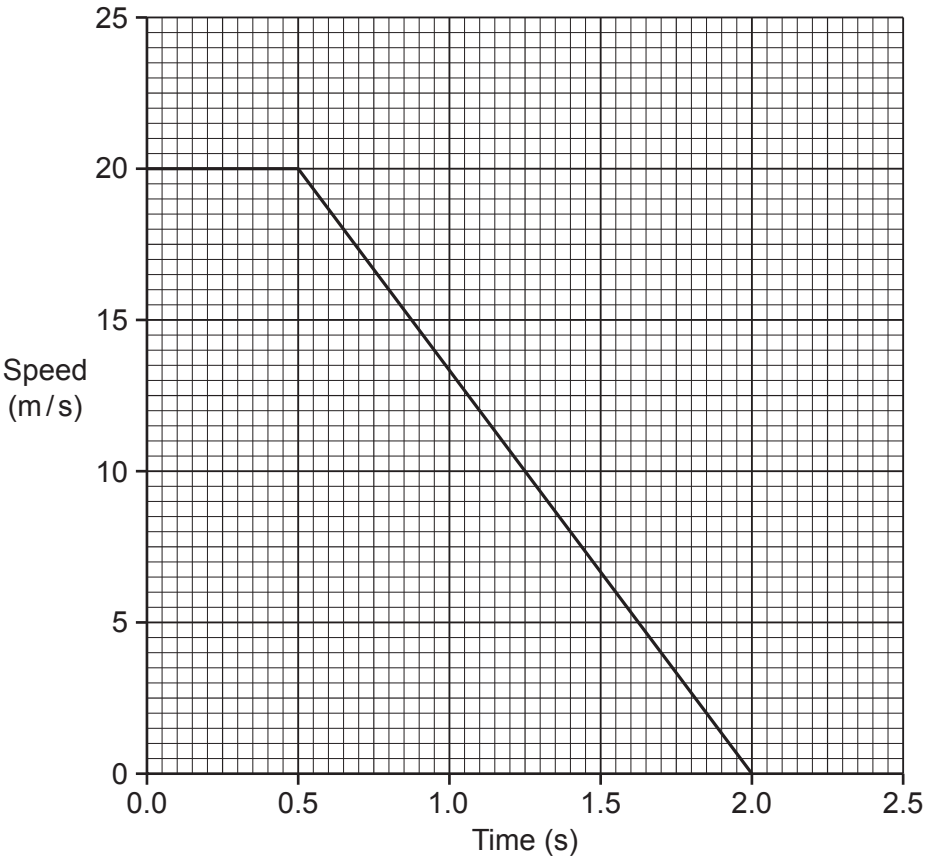

At time = 0.0 s, the driver sees an obstruction in the road.
At time = 0.5 s, the driver presses the brakes.
At time = 2.0 s, the car stops.

What is the thinking distance of this car?
Use the graph.

A 10 m

B 15 m

C 25 m

D 40 m

Your answer ☐ **[1]**

© OCR 2022

SECTION B

Answer **all** the questions.

16 **Fig. 16.1** shows a teacher's experiment.

The teacher pulls a wooden block through a fixed distance and calculates the work done from their measurements.

Fig. 16.1

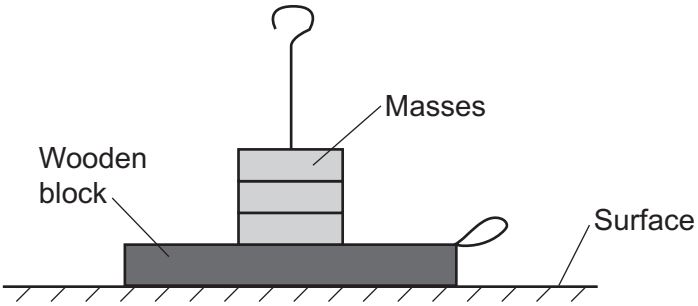

The table shows the teacher's results.

Mass (kg)	Work done (J)
0.1	1.9
0.2	2.3
0.3	2.8
0.4	3.3
0.5	3.7
0.6	4.3

(a) Describe how the teacher can do this experiment, including any equipment used.
Use the Data Sheet.

.....

.....

.....

.....

.....

..... **[3]**

© OCR 2022

(b) **(i)** Plot a graph of the data in the table and draw a line of best fit on **Fig. 16.2**.

Two of the points have already been completed for you.

Fig. 16.2

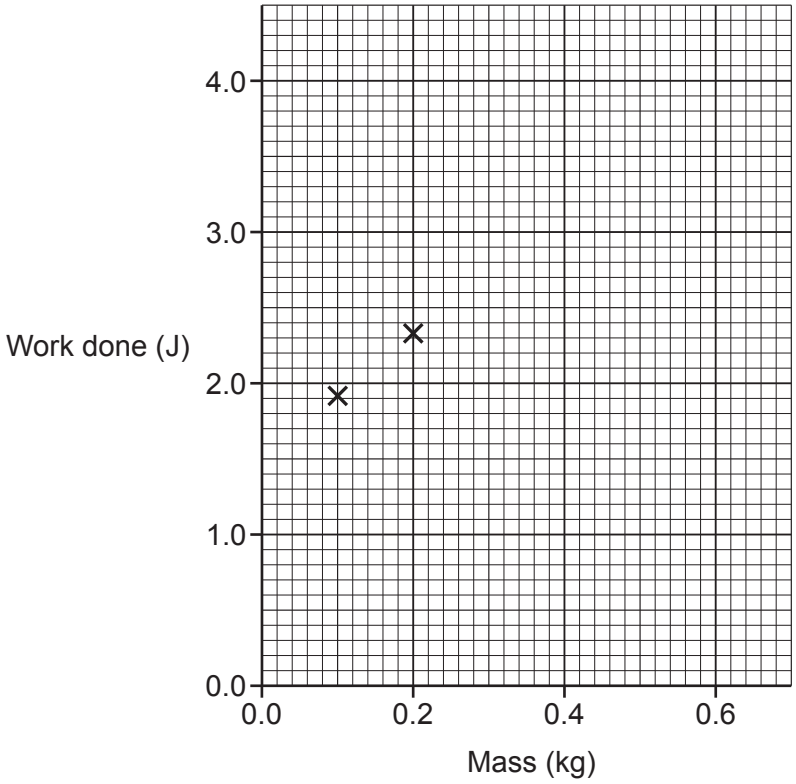

[3]

(ii) Describe the relationship between work done and mass.

.....

..... **[1]**

(c) The teacher adds a lubricant between the surface and the block.

They keep the mass of the block and distance travelled the same as before.

(i) Sketch a line on the graph to show how work done varies with mass in this new experiment.
Label this line with the letter **L**. **[1]**

(ii) Explain your reason for how you have drawn the line labelled **L** in **(c)(i)**.

.....

..... **[1]**

© OCR 2022

17 This question is about radioactivity.

(a) The nucleus of an isotope of phosphorous (P) has a relative charge of +15.
The relative mass of the nucleus is 32.

(i) Complete the symbol for this isotope.

.....
P
.....

[1]

(ii) A nucleus of this isotope emits beta radiation.

State values for the relative charge and relative mass of the nucleus after beta radiation is emitted.

Relative charge .....

Relative mass .....

[2]

(b) The table shows some information for two different isotopes of phosphorous.
The isotopes are labelled **A** and **B**.

	Relative charge	**Relative mass**
Isotope **A**	+15	29
Isotope **B**	+15	32

Complete the sentences below to describe the nucleus of isotope **A** and the nucleus of isotope **B**.

Use phrases from the list.

less than B	**more than B**	**the same as B**

The number of protons in the nucleus of **A** is …… .

The number of neutrons in the nucleus of **A** is …… .

[2]

© OCR 2022

(c) A doctor needs to explore a patient's internal organs. The doctor follows these steps:

- Injects a radioactive isotope into the patient.
- Sets up a special camera outside the patient's body.
- Uses the camera to detect radiation emitted from the isotope.

(i) Which radiation should be emitted by the isotope?

Tick (✓) **one** box.

Alpha ☐

Beta ☐

Gamma ☐

State a reason for your answer.

.....

..... **[2]**

(ii) There are three different isotopes with the following half-lives:

4 minutes	**6 hours**	**18 days**

The doctor chooses the isotope with a half-life of **6 hours**.

Suggest **two** reasons why **6 hours** is the most suitable half-life.

1 .....

.....

2 .....

.....

[2]

© OCR 2022

18 A student is trying to calculate how far away they are from a large cliff.

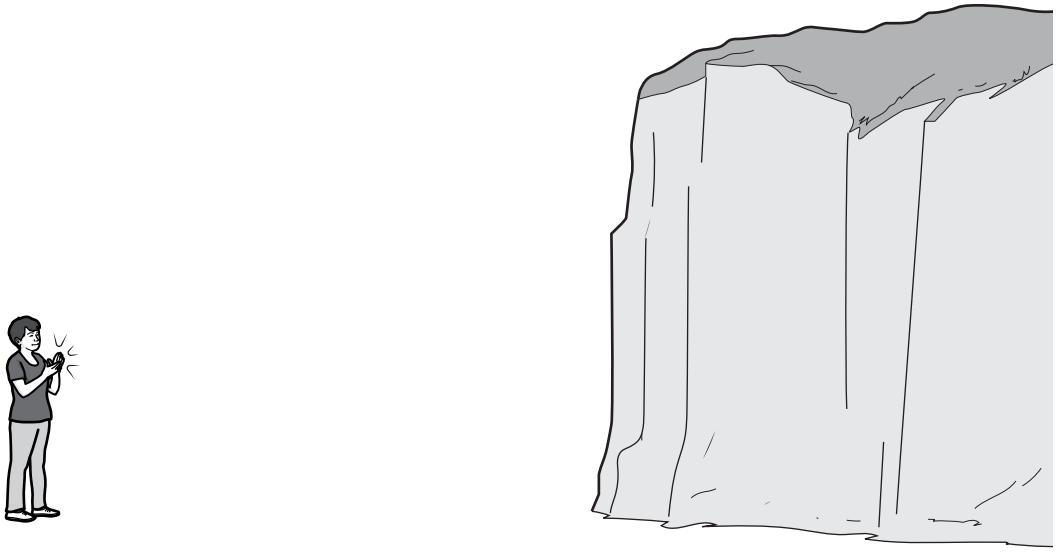

(a) The student claps loudly once.

After a short time, they hear a second clap. The second clap is quieter.

(i) Explain why they hear the second clap **and** why the second clap is quieter.

.....

.....

.....

..... **[2]**

(ii) The student measures the time between the first clap and the second clap.

The time taken is 1.40 s.
The speed of sound in air is 330 m / s.

Calculate the distance from the student to the cliff.
Use the Data Sheet.

Distance = ... m **[4]**

© OCR 2022

(iii) The student measures the time between the first and second clap with a stopwatch.

Suggest **two** reasons why the distance calculated in **(a)(ii)** is **not** accurate.

1 .....

2 .....
[2]

(iv) Suggest how the experiment could be improved.

.....

..... **[1]**

(b) When the student claps, they hear the sound.

(i) Describe how the sound travels from the student's hand to their ear.

.....

.....

.....

..... **[2]**

(ii) Describe how the sound travels through the ear.

.....

.....

.....

..... **[2]**

(c) The student makes two different sounds, sound **A** and sound **B**.

	Frequency (Hz)
Sound **A**	600
Sound **B**	1200

Explain how the **wavelength** of sound **A** is different to the wavelength of sound **B**.

.....

.....

.....

..... **[2]**

© OCR 2022

19* A car manufacturer tests two different cars of the same length, car **A** and car **B**.

Each car is pulled along at 14 m/s and crashes into a wall.

The diagrams show car **A** before and after the crash.

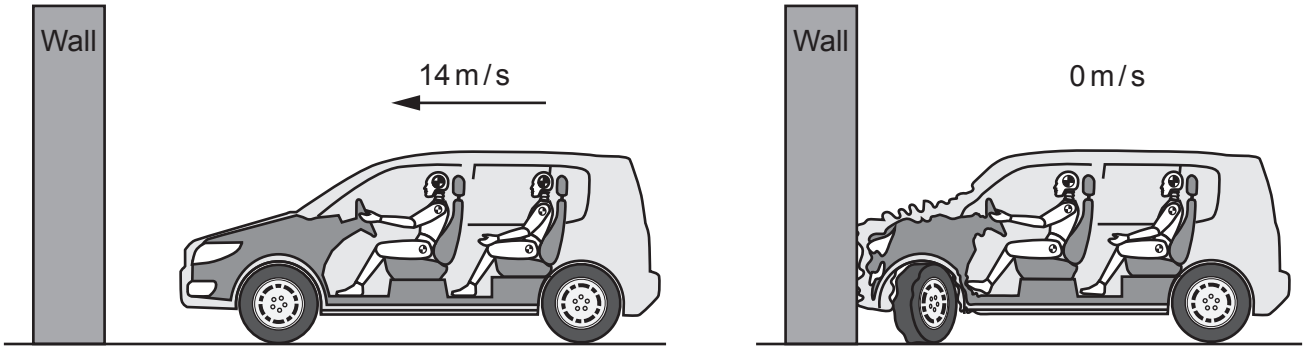

Before crash **After crash**

After hitting the wall, the rear wheel of car **A** takes **twice** the distance to stop compared to the rear wheel of car **B**.

Explain why car **A** is safer than car **B**.

In your answer, estimate the deceleration of car **A** during the crash.
Use the Data Sheet.

.....

.....

.....

.....

.....

.....

.....

.....

.....

.....

.....

..... **[6]**

© OCR 2022

BLANK PAGE

PLEASE DO NOT WRITE ON THIS PAGE

© OCR 2022

20 A student does an experiment to measure the specific heat capacity of a metal block.

Fig. 20.1 shows the student's equipment.

Fig. 20.1

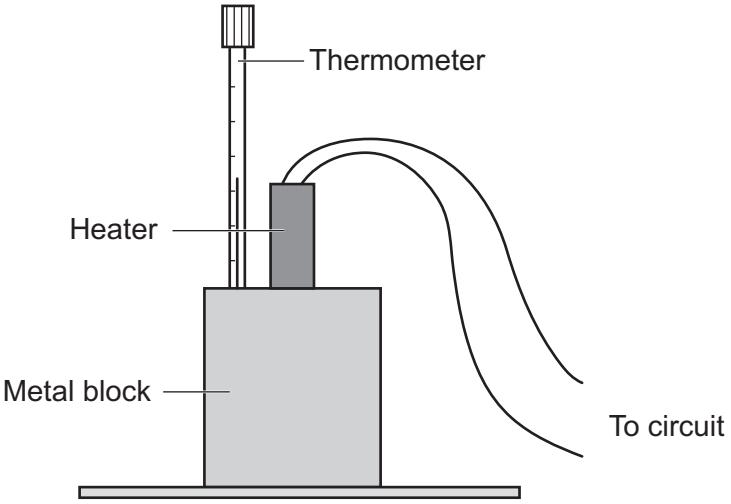

(a) The student measures current and potential difference to calculate the power of the heater.

Complete the circuit diagram in **Fig. 20.2** to show how the student measures current and potential difference.

Fig. 20.2

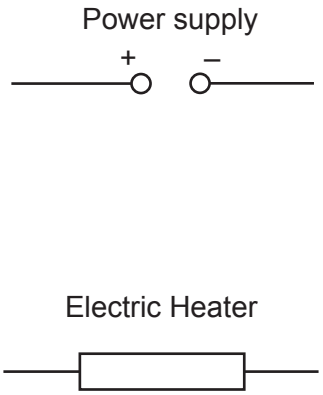

[2]

© OCR 2022

(b) **(i)** The table shows the student's results.

Energy supplied to heater	24 kJ
Starting temperature	20 °C
Final temperature	45 °C
Change in temperature	25 °C
Mass of block	2.0 kg

Use the data in the table to calculate the specific heat capacity of the metal block.

Use the Data Sheet.

Specific heat capacity = ... J / kg °C **[4]**

(ii) The value calculated in **(b)(i)** is higher than the actual value.
The student recorded all data correctly.

Suggest why the value calculated is higher than the actual value.

Use **Fig. 20.1**.

.....

..... **[1]**

(iii) Suggest how the experiment could be improved.

Use **Fig. 20.1**.

.....

..... **[1]**

© OCR 2022

(c) The student repeats the same experiment using 3 different blocks, **A**, **B** and **C**.

- Each block is made of a different metal but has the same mass.
- The power of the heater stays the same.

The graph shows how the temperature of blocks **A**, **B** and **C** change with time.

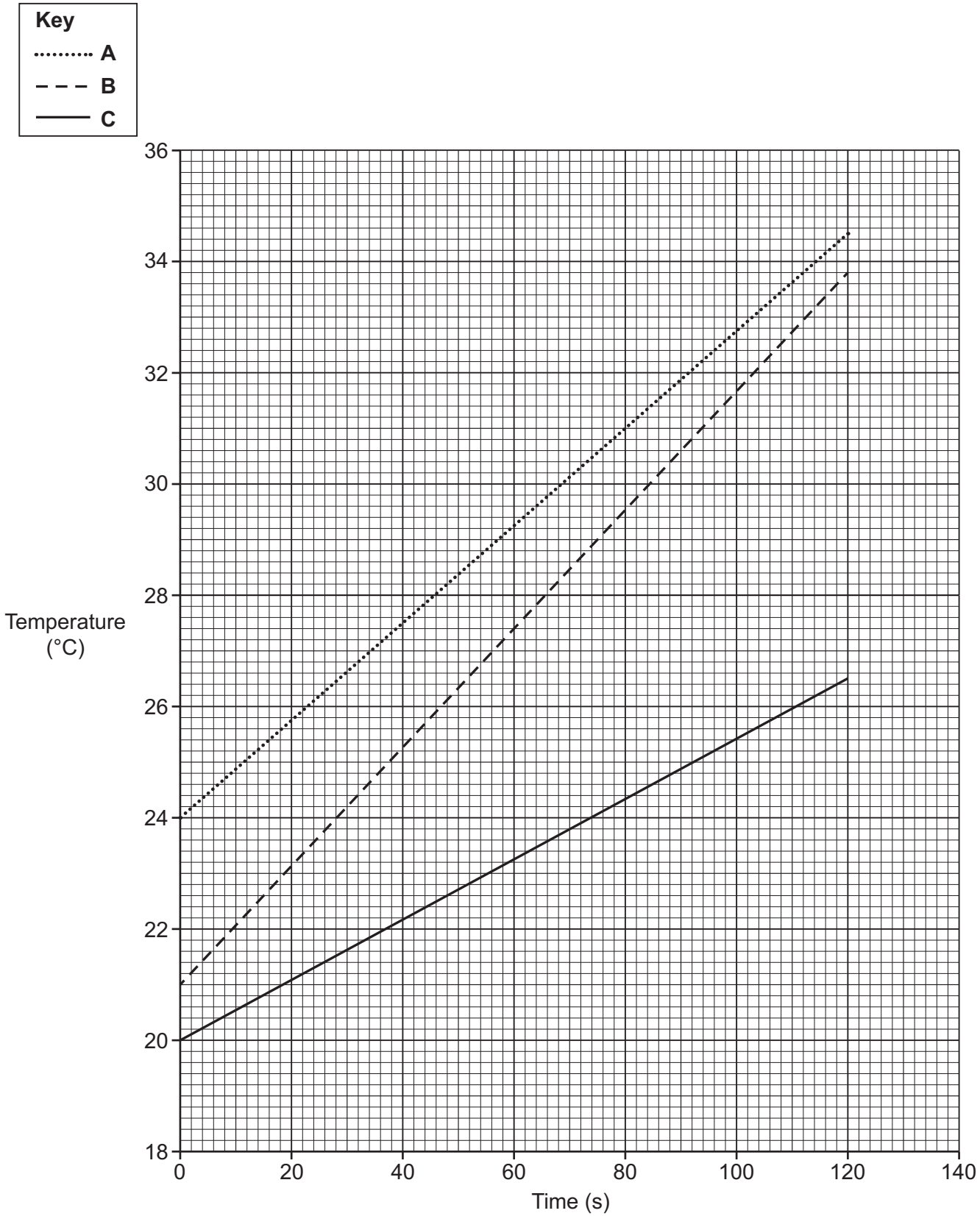

© OCR 2022

Which metal has the **highest** specific heat capacity?
Tick (✓) **one** box.

A ☐

B ☐

C ☐

State a reason for your answer.

.....

..... **[2]**

© OCR 2022

21 **(a)** **Fig. 21.1** shows how the energy output per second of a wind turbine depends on the wind speed.

Fig. 21.1

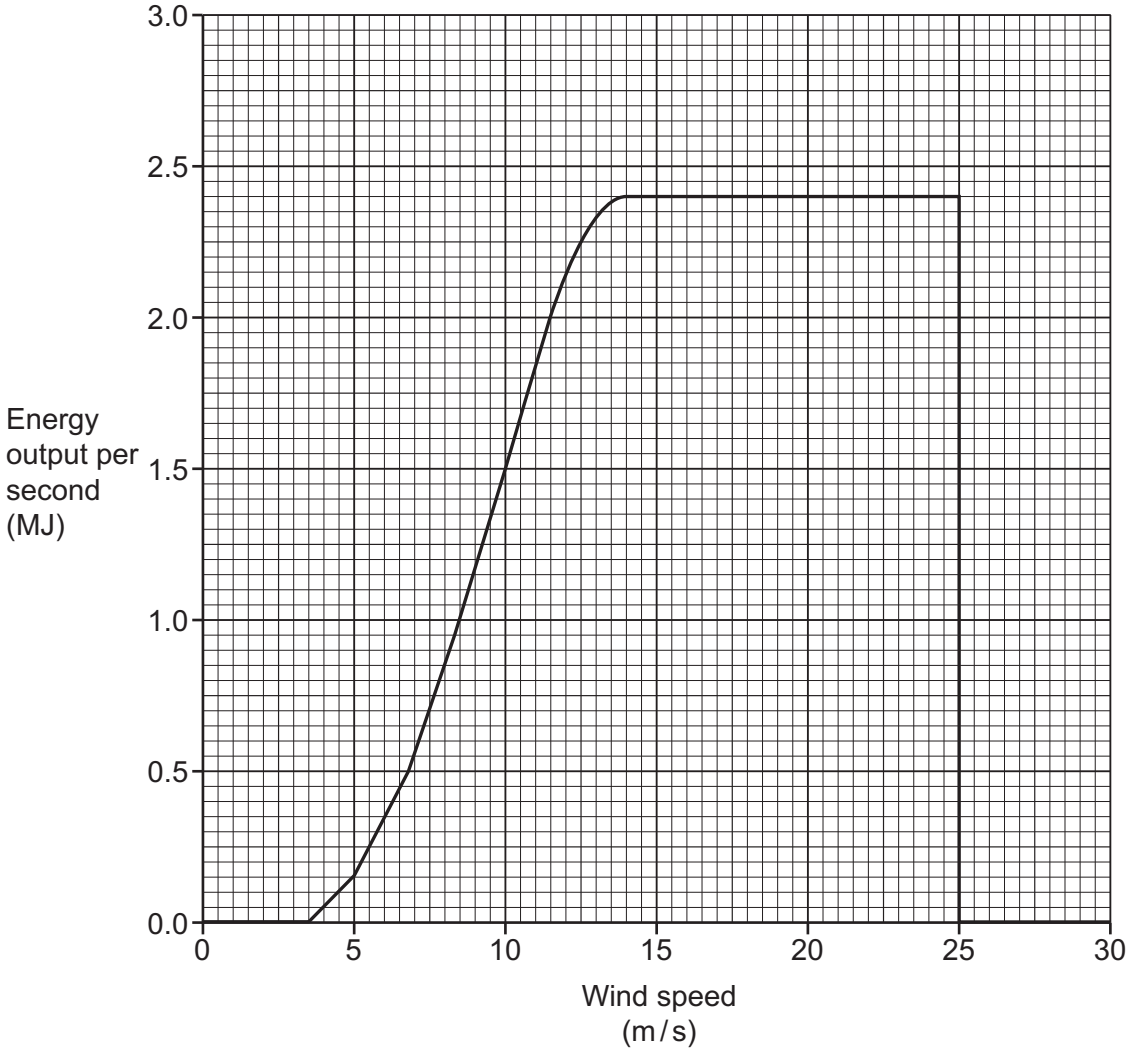

(i) Suggest a reason why energy output per second is zero when the wind speed is:

1 Less than 3.5 m / s.

.....

.....

2 Greater than 25 m / s.

.....

.....

[2]

© OCR 2022

(ii) The wind turbine has an efficiency of 0.35.

Calculate the input energy per second when the wind speed is 10 m / s.

Use **Fig. 21.1** and the Data Sheet.

Give your answer to **2** significant figures.

Input energy per second = ... MJ **[5]**

© OCR 2022

(b) **Fig. 21.2** shows how the amount of electricity generated by wind in Europe has changed with time.

Fig. 21.2

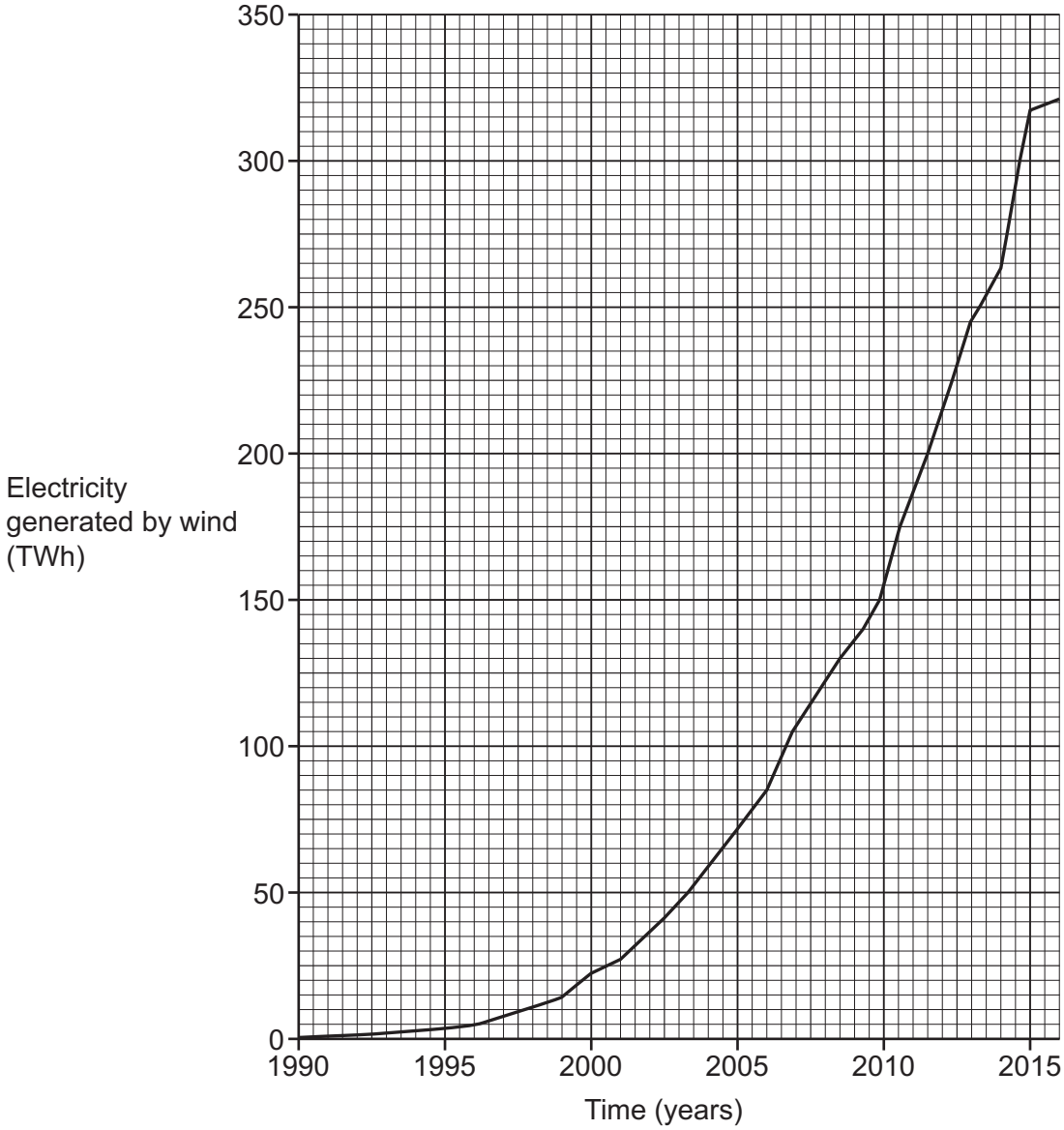

(i) State the amount of electricity generated by wind in 2012 in joules.

$1\,\text{TW}\,\text{h} = 3.6 \times 10^{15}\,\text{J}$

Give your answer in standard form.

Electricity generated = ... J **[2]**

© OCR 2022

(ii) Suggest **two** reasons for the change shown in **Fig. 21.2**.

1 .....

.....

2 .....

.....
[2]

(c) The wind turbine generates electricity at 900 V.

The wind turbine is connected to the national grid using a transformer.

(i) The potential difference across the primary coil is 900 V.
The potential difference across the secondary coil is 36 000 V.
The current in the primary coil is 2800 A.

Calculate the current in the **secondary** coil.

Use the Data Sheet.

Current = ... A **[2]**

(ii) Explain why the use of the transformer in **(c)(i)** reduces power loss in the national grid.

.....

.....

.....

.....

.....

..... **[3]**

© OCR 2022

(iii) Another transformer has a power input of 864 900 W.

The current in the primary coil is 1860 A.

Calculate the resistance of the primary coil.

Use the equation: power = $(\text{current})^2 \times \text{resistance}$

Resistance = ... Ω **[3]**

© OCR 2022

BLANK PAGE

PLEASE DO NOT WRITE ON THIS PAGE

© OCR 2022

22 The diagram shows two planets orbiting the Sun in our Solar System.

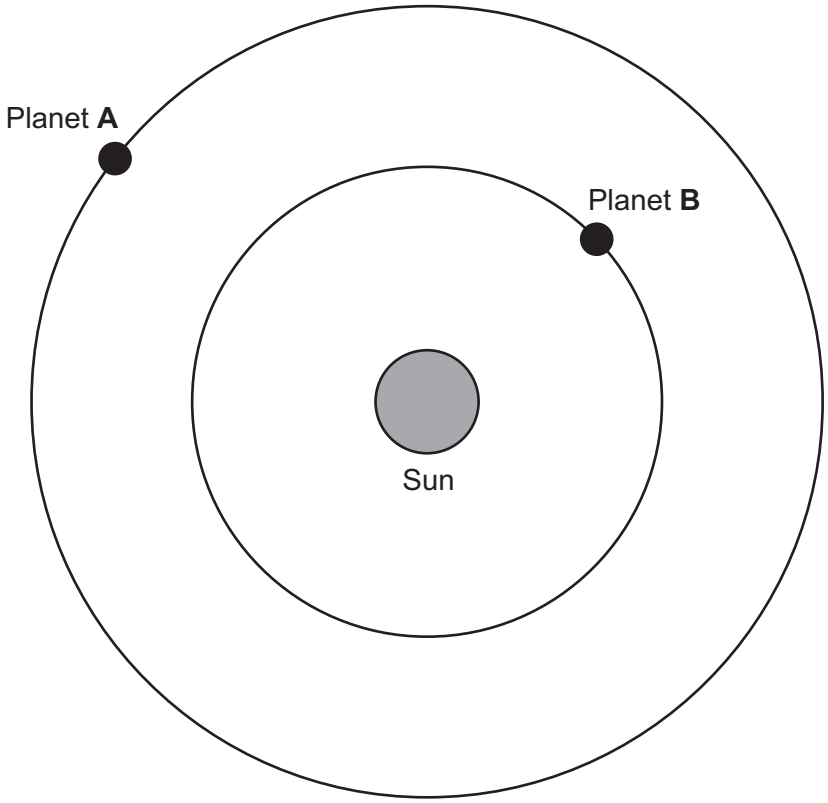

(a) Read the two statements about planet **A**:

- The speed of planet **A** is constant.
- The velocity of planet **A** is changing.

Explain why these two statements are correct. Write about forces.

.....

.....

.....

.....

.....

..... **[3]**

© OCR 2022

(b) The table shows data for the planets.

	Radius of orbit (metres)	**Time to orbit Sun (years)**	**Mean orbital speed (km/s)**
Planet A	2.28×10^{11}	1.88	24
Planet B	1.08×10^{11}	0.62	35

(i) Explain why the speed of a planet changes when the radius of orbit changes.

.....

.....

.....

..... **[2]**

(ii) Two students look at the data.

Student P says, 'The time to orbit the Sun is proportional to the radius of orbit.'

Student Q disagrees.

Use the data in the table to show that **Student Q** is correct.

.....

..... **[2]**

END OF QUESTION PAPER

© OCR 2022

ADDITIONAL ANSWER SPACE

If additional space is required, you should use the following lined page(s). The question number(s) must be clearly shown in the margin(s).

OCR
Oxford Cambridge and RSA

Copyright Information

OCR is committed to seeking permission to reproduce all third-party content that it uses in its assessment materials. OCR has attempted to identify and contact all copyright holders whose work is used in this paper. To avoid the issue of disclosure of answer-related information to candidates, all copyright acknowledgements are reproduced in the OCR Copyright Acknowledgements Booklet. This is produced for each series of examinations and is freely available to download from our public website (www.ocr.org.uk) after the live examination series.

If OCR has unwittingly failed to correctly acknowledge or clear any third-party content in this assessment material, OCR will be happy to correct its mistake at the earliest possible opportunity.

For queries or further information please contact The OCR Copyright Team, The Triangle Building, Shaftesbury Road, Cambridge CB2 8EA.

OCR is part of Cambridge University Press & Assessment, which is itself a department of the University of Cambridge.

© OCR 2022