OCR
Oxford Cambridge and RSA

H

Thursday 9 June 2022 – Afternoon

GCSE (9–1) Physics A (Gateway Science)

J249/03 Paper 3 (Higher Tier)

Time allowed: 1 hour 45 minutes

You must have:
- a ruler (cm/mm)
- the Data Sheet for GCSE (9–1) Physics A (inside this document)

You can use:
- a scientific or graphical calculator
- an HB pencil

Please write clearly in black ink. **Do not write in the barcodes.**

Centre number | | | | | | Candidate number | | | | |

First name(s) _____

Last name _____

INSTRUCTIONS
- Use black ink. You can use an HB pencil, but only for graphs and diagrams.
- Write your answer to each question in the space provided. If you need extra space use the lined pages at the end of this booklet. The question numbers must be clearly shown.
- Answer **all** the questions.
- Where appropriate, your answer should be supported with working. Marks might be given for a correct method, even if the answer is wrong.

INFORMATION
- The total mark for this paper is **90**.
- The marks for each question are shown in brackets **[ ]**.
- Quality of extended response will be assessed in questions marked with an asterisk (*****).
- This document has **28** pages.

ADVICE
- Read each question carefully before you start your answer.

© OCR 2022 [601/8651/3]
DC (ST/SG) 301206/6
OCR is an exempt Charity

SECTION A

Answer **all** the questions.

You should spend a maximum of 30 minutes on this section.

Write your answer to each question in the box provided.

1 A current of 2 A flows in a circuit.

How much charge is transferred in 3 minutes?
Use the Data Sheet.

A 1.5 C

B 6.0 C

C 120 C

D 360 C

Your answer ☐ **[1]**

2 A student draws the magnetic field lines between the poles of two magnets.

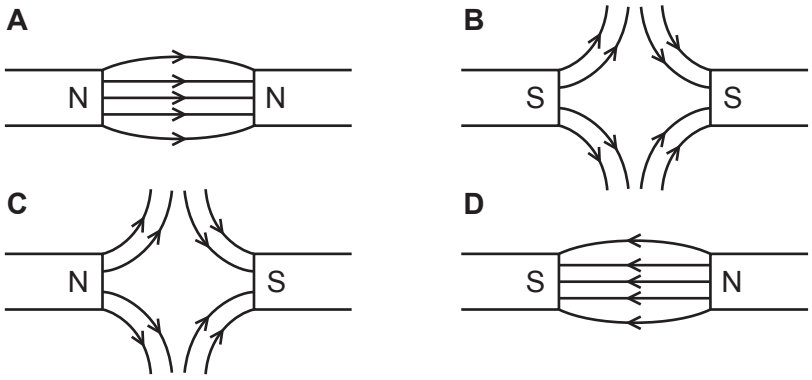

Which magnetic field line diagram is correct?

Your answer ☐ **[1]**

© OCR 2022

3 A student of mass 65 kg climbs a flight of 50 steps. Each step is 0.30 m high.

What is the gravitational potential energy gained by the student?

Use the equation: potential energy = mass × height × gravitational field strength

Gravitational field strength = 10 N / kg.

A 195 J

B 9750 J

C 19 500 J

D 975 000 J

Your answer ☐ **[1]**

4 A student holds a balloon near a narrow stream of water from a tap. The water is attracted to the balloon.

Why does this happen?

A The water and the balloon are both negatively charged.

B The water and the balloon are both positively charged.

C The water and the balloon are not charged.

D The water is positively charged and the balloon is negatively charged.

Your answer ☐ **[1]**

© OCR 2022

5 The graph shows how a copper wire behaves when it is stretched.

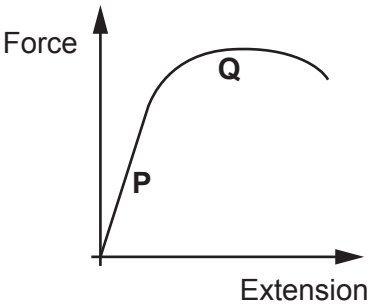

Which row in the table describes part **P** and part **Q** on the graph?

	Part P	**Part Q**
A	linear	elastic
B	linear	plastic
C	non-linear	elastic
D	non-linear	plastic

Your answer ☐ **[1]**

6 A student heats a substance steadily from a solid to a gas. The temperature change is recorded on the graph.

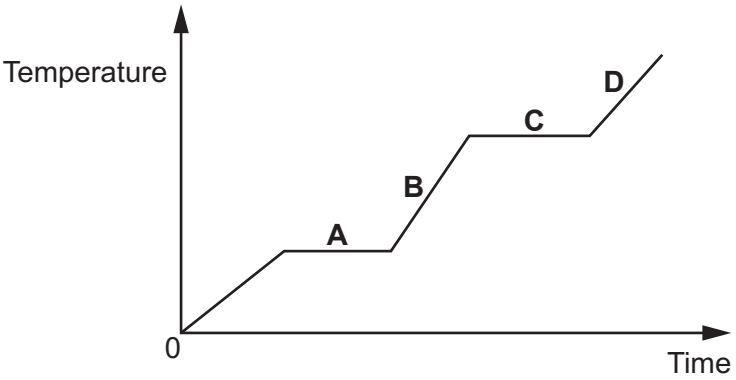

Which section of the graph is where the specific latent heat of vaporisation is used to calculate the energy needed for this change of state?

Your answer ☐ **[1]**

© OCR 2022

7 A decorator uses a screwdriver as a lever to open a tin of paint. The edge of the tin acts as a pivot.

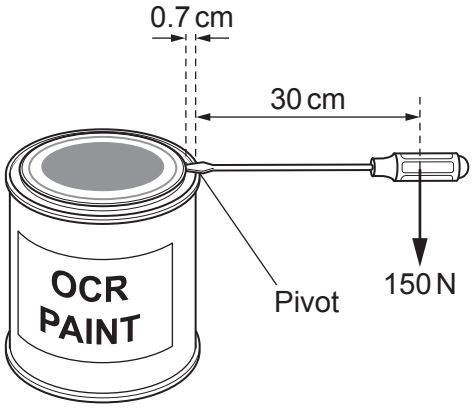

What is the clockwise moment of the screwdriver about the pivot?
Use the Data Sheet.

A 5.0 Nm

B 45 Nm

C 46 Nm

D 500 Nm

Your answer ☐ **[1]**

8 A student sets up four arrangements, **A**, **B**, **C** and **D**, using identical fixed resistors.

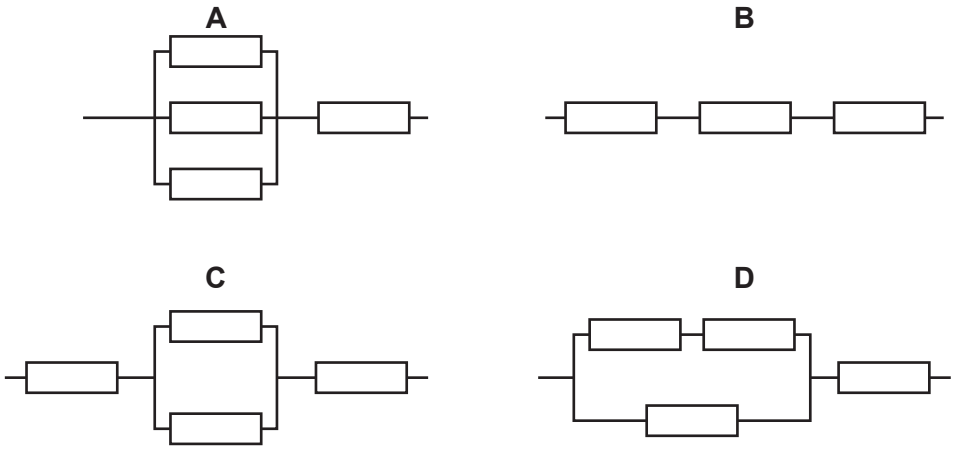

Which arrangement has the lowest resistance?

Your answer ☐ **[1]**

© OCR 2022

9 A teacher measures the pressure and volume of a fixed gas at a constant temperature.

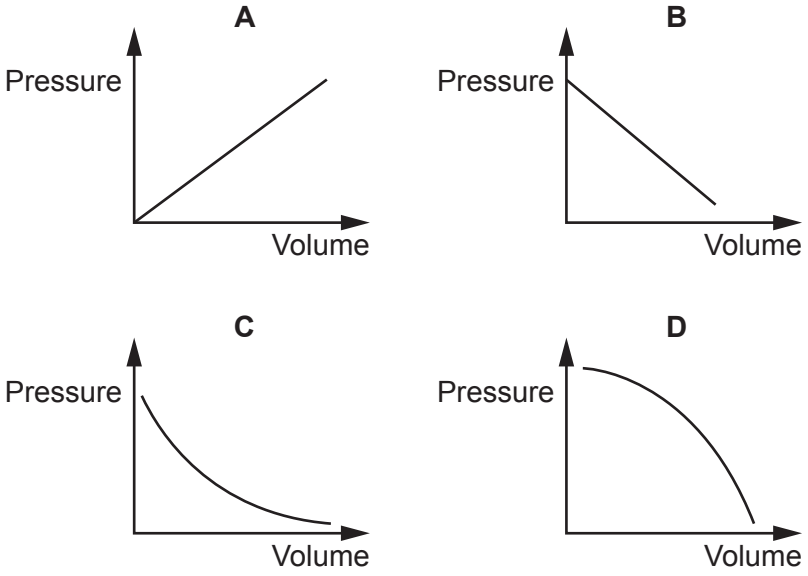

Which graph shows the correct relationship between pressure and volume for the gas?

Your answer ☐ **[1]**

10 The diagram shows when a hydraulic machine uses a liquid to transmit a force.
When piston **X** is pressed, the force is transmitted and piston **Y** moves.

The area of piston **X** is 4.0 cm^2 and the area of piston **Y** is 20 cm^2.

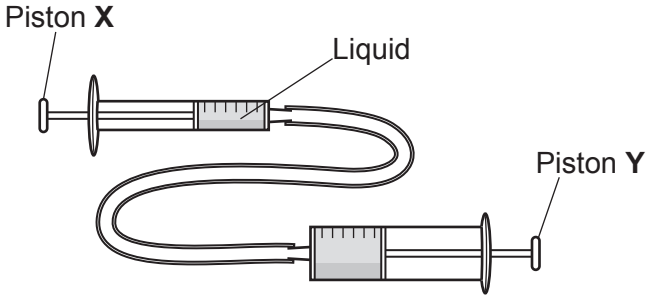

Piston **X** is pressed with a force of 10 N.
What is the force produced at piston **Y**?

Use the equation: pressure = $\frac{\text{force normal to a surface}}{\text{area of that surface}}$

A 2.0 N

B 40 N

C 50 N

D 200 N

Your answer ☐ **[1]**

© OCR 2022

11 There are 1609 m in a mile.
Which of these is approximately the same speed as 56 miles per hour?

A 25 m/s

B 29 m/s

C 52 m/s

D 90 m/s

Your answer ☐ **[1]**

12 Two forces, of magnitude 40 N and 60 N, act on an object.

A student draws a scale-diagram to determine the net force **F** acting on the object.

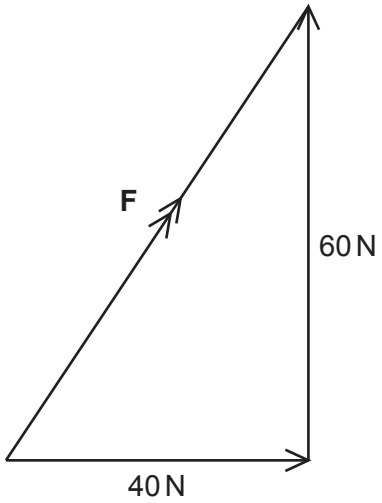

Scale 1 cm = 10 N

What is the net force **F** acting on the object?

A 7.2 N

B 20 N

C 72 N

D 100 N

Your answer ☐ **[1]**

© OCR 2022

13 Velocity–time graphs are drawn for four different objects.

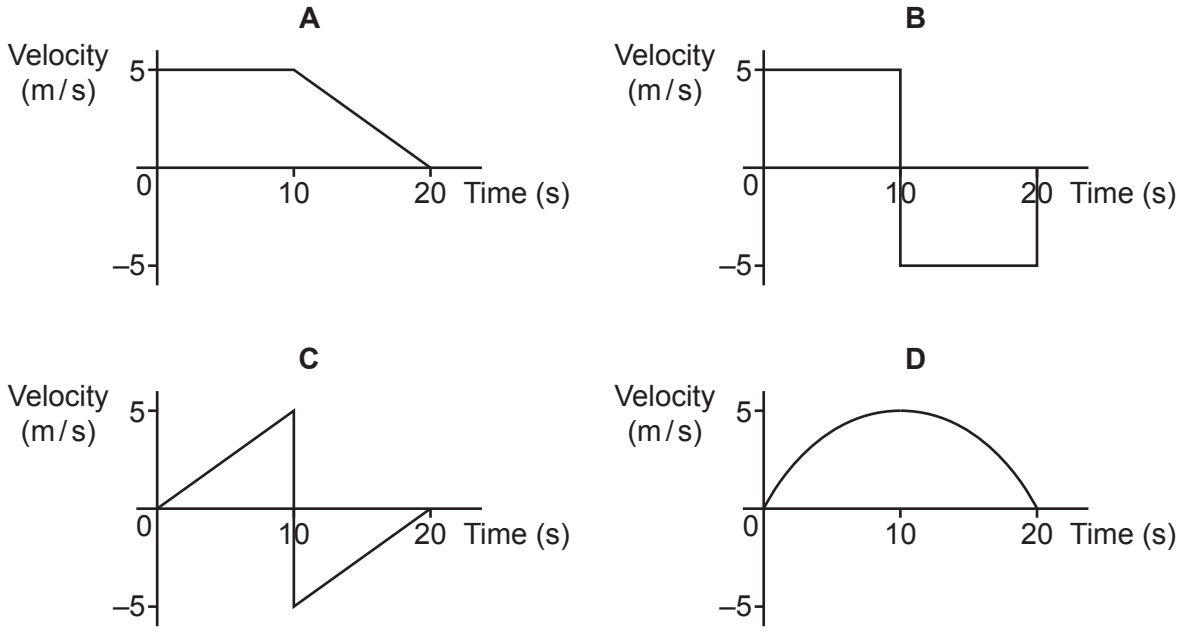

Which object has the largest displacement?

Your answer ☐ **[1]**

14 An object floating in water experiences an upwards force.

What causes this upwards force on the object?

A Pressure at the top of the object is greater than at the bottom of the object.

B Pressure at the top of the object is less than at the bottom of the object.

C The density of the object is greater than the density of the water.

D The weight of the water displaced is less than the weight of the object.

Your answer ☐ **[1]**

© OCR 2022

15 A submarine travels to the bottom of an ocean. The ocean is 2.5 km deep and the density of the sea water is 1020 kg / m^3.

What is the water pressure on the submarine at the bottom of the ocean?

Use the Data Sheet.

Gravitational field strength = 10 N / kg.

A 2.55 kPa

B 25.5 kPa

C 2.55 MPa

D 25.5 MPa

Your answer ☐ **[1]**

© OCR 2022

SECTION B

Answer **all** the questions.

16 Two students decide to determine the mean speed of cars passing outside their school.

(a) Describe how the students will take the measurements they need to be able to calculate the mean speed of a car.

.....

.....

.....

.....

.....

..... **[4]**

(b) The students also investigate the motion of two battery-powered toy cars, **A** and **B**.
The velocity–time graph shows their results.

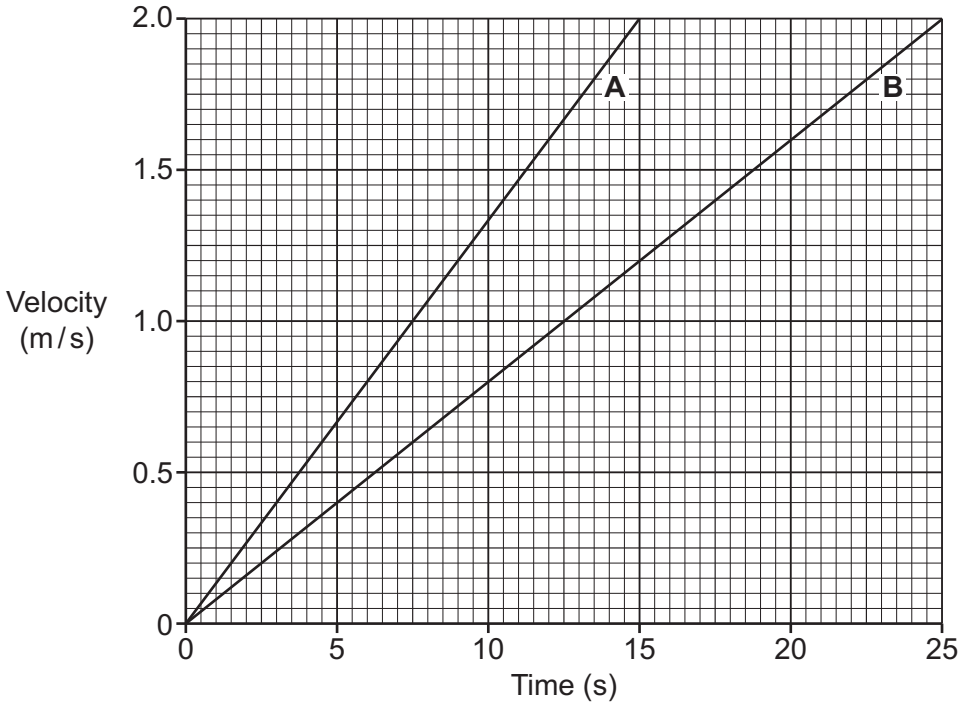

(i) Which toy car, **A** or **B**, has the greater acceleration? Explain your answer.

Car .....

Reason .....

[1]

© OCR 2022

(ii) Use the graph to calculate the acceleration of car **B**.

Acceleration = ... m/s^2 **[3]**

(iii) Both cars have the same mass.

Suggest why it takes different amounts of time for them to reach their top speeds.

..... **[1]**

© OCR 2022

17 A scientist sets up an electrical circuit.

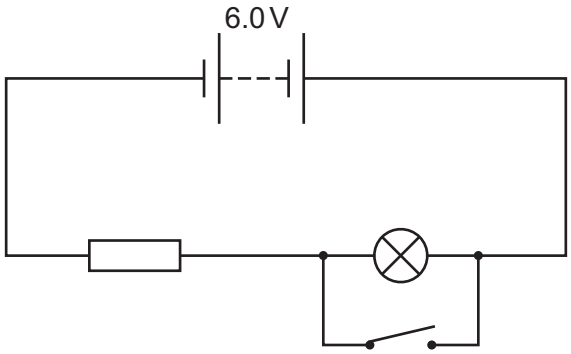

The lamp and the resistor each have a resistance of 5.0 Ω so that the total resistance in the circuit is 10.0 Ω.

(a) **(i)** Calculate the current in the circuit when the switch is open.
Use the Data Sheet.

Current = ... A **[3]**

(ii) State the potential difference across the resistor when the switch is open.

Potential difference = ... V **[1]**

(b) The switch is now **closed**.

(i) Describe how the current through the resistor changes. Explain your answer.

.....

.....

..... **[2]**

(ii) Describe how the potential difference across the resistor changes. Explain your answer.

.....

.....

..... **[2]**

(iii) State the potential difference across the lamp when the switch is closed.

Potential difference = ... V **[1]**

© OCR 2022

BLANK PAGE

PLEASE DO NOT WRITE ON THIS PAGE

© OCR 2022

18* Two students, **P** and **Q**, investigate how the resistance of wire varies with its length. Each student uses different lengths of the **same** wire and the **same** equipment for their experiment.

- **Table 18.1** shows the data that student **P** obtained.
- **Table 18.2** shows the data that student **Q** obtained.

Table 18.1

Student P data

Length of wire (cm)	Resistance Trial 1 (Ω)	Resistance Trial 2 (Ω)	Mean resistance (Ω)	Resistance per unit length (Ω / cm)
10	12	20	16	1.6
15	25	30	28	1.9
19	21	29	25	1.32

Table 18.2

Student Q data

Length of wire (cm)	Resistance Trial 1 (Ω)	Resistance Trial 2 (Ω)	Mean resistance (Ω)	Resistance per unit length (Ω / cm)
10.0	11.0	11.2	11.1	1.10
20.0	19.8	20.2	20.0	1.00
30.0	33.0	33.2	33.1	1.10
40.0	48.0	48.4	48.2	1.20
50.0	55.1	55.5	55.3	1.10

The manufacturer of the wire states that the value for its resistance per unit length is 1.2 Ω / cm.

Compare the data recorded in the two tables. Explain which student's data is the most accurate and precise.

.....

.....

.....

.....

.....

.....

.....

© OCR 2022

.....

.....

.....

.....

..... **[6]**

© OCR 2022

19 **(a)** Between 1908 and 1913, two scientists did experiments to help understand the structure of atoms.
The diagram shows how the scientists fired alpha particles at a thin piece of gold foil and detected what happened to these particles.

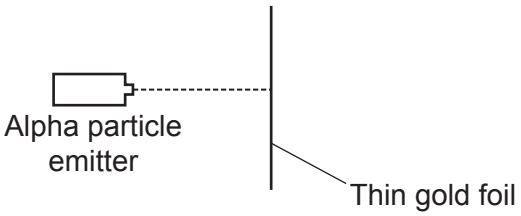

(i) The scientists detected that a very small number of particles reflected directly back, some particles were deflected, and most particles passed straight through the foil.

Describe the model of the atom following these observations.

.....

.....

.....

.....

..... **[3]**

(ii) Explain why the previous model of the atom needed to change after this experiment.

.....

..... **[1]**

© OCR 2022

(b) A classroom contains air particles. A drawing of the classroom is shown in the diagram.

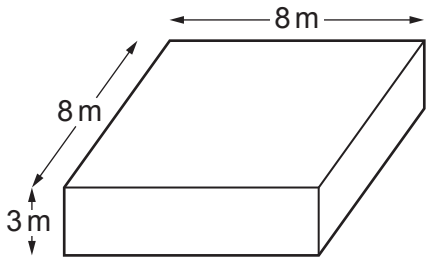

(i) Calculate the volume of the classroom.

Volume = ... m^3 **[1]**

(ii) The density of air is $0.012\,kg/m^3$.
Calculate the mass of air in the classroom.

Use the equation: density = mass / volume

Mass = ... kg **[3]**

© OCR 2022

20 Two skaters are standing, at rest, opposite each other on an ice rink.

Skater **A** has a mass of 40 kg and skater **B** has a mass of 50 kg.

Skater **A** pushes against skater **B** with a force of 30 N.

(a) **(i)** What does Newton's third law tell us about the force that skater **A** experiences from skater **B**?

.....

.....

..... **[2]**

(ii) Calculate the acceleration of skater **B** when they are pushed with the force of 30 N.

Use the equation: force = mass × acceleration

Acceleration = ... m/s^2 **[3]**

© OCR 2022

(b) **(i)** State the total momentum of both skaters **before** skater **A** pushes skater **B**.

..... **[1]**

(ii) After pushing skater **B**, skater **A** has a velocity of 2 m/s.

Calculate the momentum of skater **A**.

Use the equation: momentum = mass × velocity

Momentum = ... kg m/s **[2]**

(iii) Calculate the velocity of skater **B** after being pushed by skater **A**.

Velocity = ... m/s **[3]**

© OCR 2022

21 A student investigates a simple electric motor as shown in the diagram.

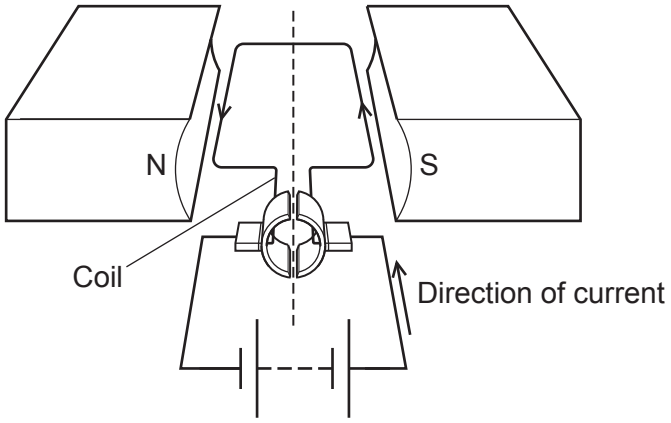

(a) **(i)** Suggest why the coil turns when a current flows.

.....

..... **[1]**

(ii) In which direction will this motor turn?
State the name of the rule you used to work this out.

Direction .....

Name of rule .....

.....
[2]

(b) Suggest **two** ways in which the size of the force on the coil could be increased.

1 .....

2 .....
[2]

© OCR 2022

BLANK PAGE

PLEASE DO NOT WRITE ON THIS PAGE

© OCR 2022

22 A student investigates the extension of springs in parallel.

The student attaches a 0.8 N weight to two, four, six and eight springs in parallel.
They then measure the extension using a ruler.

The diagram shows the experiment with two springs in parallel.

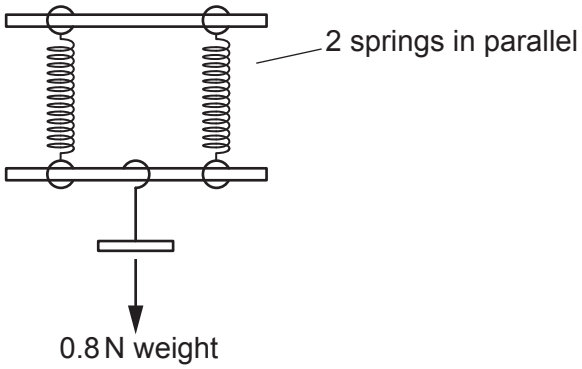

The results are shown in the table.

Number of springs in parallel	Extension (cm)
2	1.2
4	0.6
6	0.4
8	0.3

(a) **(i)** Explain why the student found it difficult to measure the extensions shown in the table.

.....

..... **[1]**

(ii) Suggest how the student could change the experiment to produce extensions that are easier to measure.

.....

..... **[1]**

© OCR 2022

(b) The graph shows these results.

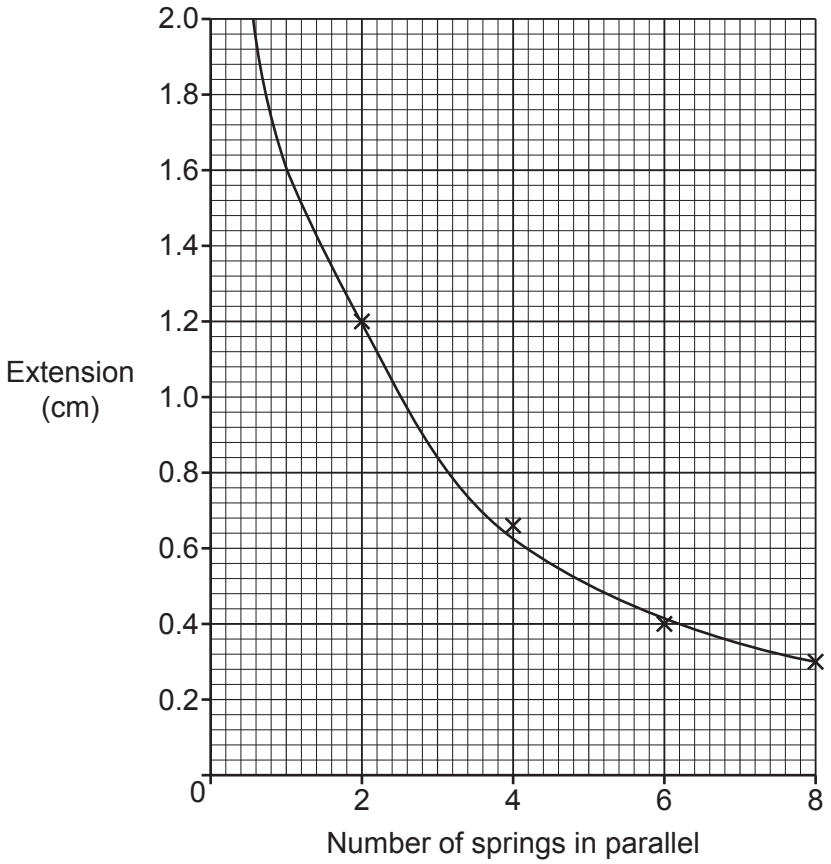

(i) One point has been incorrectly plotted.
Circle the incorrectly plotted point and then plot it in the correct place. **[2]**

(ii) Describe the relationship between the number of springs in parallel and their extension.

.....

.....

..... **[2]**

(c) Use the graph to calculate the spring constant for a single spring.

Use the equation: force exerted by a spring = extension × spring constant

Spring constant = ... N/m **[5]**

© OCR 2022

(d) A manufacturer has a choice of three different springs to use in a mattress for a bed as shown in the table.

Mattress spring	Spring Constant (N / m)
R	6000
S	9000
T	12 000

Explain which mattress spring, **R**, **S**, or **T**, compresses the most when a person lies on it.

Mattress spring .....

Reason .....

.....

[1]

© OCR 2022

BLANK PAGE

PLEASE DO NOT WRITE ON THIS PAGE

© OCR 2022

23 A student drops a piece of metal and a small magnet through a vertical copper tube. They record the time taken for each object to pass through the tube.

The diagram shows how they set up the experiment.

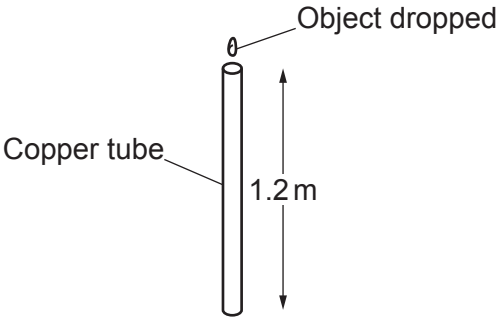

The student records their results in a table.

	Time taken to fall through the copper tube (s)					
	1	**2**	**3**	**4**	**5**	**Mean**
Magnet	1.13	1.11	1.12	1.11	1.13	
Metal	0.44	0.45	0.46	0.44	0.43	0.4444

(a) (i) Calculate the mean time that the magnet takes to pass through the copper tube.

..... **[1]**

(ii) The student has made a mistake when recording their results in the table.

Identify the mistake and suggest a correction.

Mistake: .....

Correction: .....
[2]

(iii) The student claims that their data shows that their experiment is reproducible. Explain if the student is correct.

.....

..... **[1]**

(iv) Why did the student repeat their experiment 5 times and calculate a mean?

.....

..... **[1]**

(b) (i) Calculate how many times longer it took the magnet to fall compared to the piece of metal.

Number of times longer: ..... **[1]**

© OCR 2022

(ii) Calculate the mean speed of the metal through the copper tube.

Write your answer to **2** significant figures.

Use the equation: distance travelled = speed × time

Mean speed = ... m/s **[4]**

(c) Explain why the magnet took longer to fall than the piece of metal.

Include ideas about electromagnetic induction in your answer.

.....

.....

.....

.....

.....

..... **[3]**

(d) The diagram shows a free-body force diagram for when the magnet is at a point in the middle of the tube.

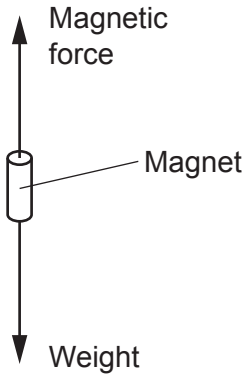

Explain the motion of the magnet.

.....

.....

.....

..... **[2]**

END OF QUESTION PAPER

© OCR 2022

ADDITIONAL ANSWER SPACE

If additional space is required, you should use the following lined page(s). The question number(s) must be clearly shown in the margin(s).

OCR
Oxford Cambridge and RSA

Copyright Information

OCR is committed to seeking permission to reproduce all third-party content that it uses in its assessment materials. OCR has attempted to identify and contact all copyright holders whose work is used in this paper. To avoid the issue of disclosure of answer-related information to candidates, all copyright acknowledgements are reproduced in the OCR Copyright Acknowledgements Booklet. This is produced for each series of examinations and is freely available to download from our public website (www.ocr.org.uk) after the live examination series.

If OCR has unwittingly failed to correctly acknowledge or clear any third-party content in this assessment material, OCR will be happy to correct its mistake at the earliest possible opportunity.

For queries or further information please contact The OCR Copyright Team, The Triangle Building, Shaftesbury Road, Cambridge CB2 8EA.

OCR is part of Cambridge University Press & Assessment, which is itself a department of the University of Cambridge.

© OCR 2022