OCR
Oxford Cambridge and RSA

F

Thursday 23 June 2022 – Morning

GCSE (9–1) Physics A (Gateway Science)

J249/02 Paper 2 (Foundation Tier)

Time allowed: 1 hour 45 minutes

You must have:
- a ruler (cm/mm)
- the Data Sheet for GCSE (9–1) Physics A (inside this document)

You can use:
- a scientific or graphical calculator
- an HB pencil

Please write clearly in black ink. **Do not write in the barcodes.**

Centre number | | | | | | Candidate number | | | | |

First name(s) _____

Last name _____

INSTRUCTIONS
- Use black ink. You can use an HB pencil, but only for graphs and diagrams.
- Write your answer to each question in the space provided. If you need extra space use the lined pages at the end of this booklet. The question numbers must be clearly shown.
- Answer **all** the questions.
- Where appropriate, your answer should be supported with working. Marks might be given for using a correct method, even if your answer is wrong.

INFORMATION
- The total mark for this paper is **90**.
- The marks for each question are shown in brackets **[ ]**.
- Quality of extended response will be assessed in questions marked with an asterisk (*).
- This document has **32** pages.

ADVICE
- Read each question carefully before you start your answer.

© OCR 2022 [601/8651/3]
DC (ST/CT) 300352/8
OCR is an exempt Charity

SECTION A

Answer **all** the questions.

You should spend a maximum of 30 minutes on this section.

Write your answer to each question in the box provided.

1 A motor transfers 4.3 kJ of energy.

What is 4.3 kJ converted into joules?

A 0.0043 J

B 0.43 J

C 430 J

D 4300 J

Your answer ☐ **[1]**

2 The diagram shows an ultrasound wave hitting a steel block.

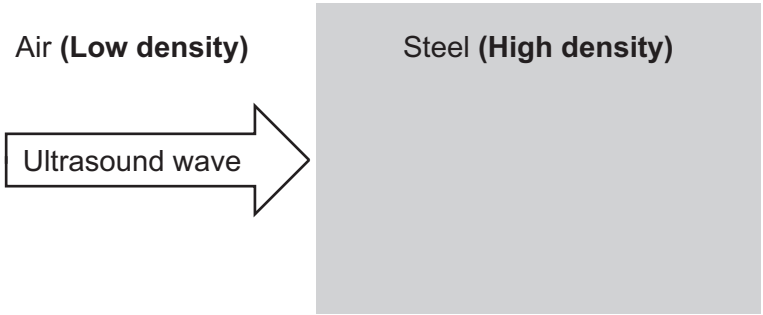

What happens to the ultrasound wave?

A It is mainly absorbed.

B It is mainly reflected.

C It is completely refracted.

D It is completely transmitted.

Your answer ☐ **[1]**

© OCR 2022

3 An astronomer observes a red-shift of light from a distant galaxy.

What does red-shift of light mean?

A The speed of the light has decreased.

B The speed of the light has increased.

C The wavelength of the light has decreased.

D The wavelength of the light has increased.

Your answer ☐ **[1]**

4 Which row describes nuclear **fusion**?

	What happens	**Where it occurs**
A	heavy nuclei split	in nuclear power stations
B	heavy nuclei split	in the Sun
C	light nuclei combine	in nuclear power stations
D	light nuclei combine	in the Sun

Your answer ☐ **[1]**

© OCR 2022

5 The diagram shows a radioactive isotope emitting alpha particles **and** beta particles.

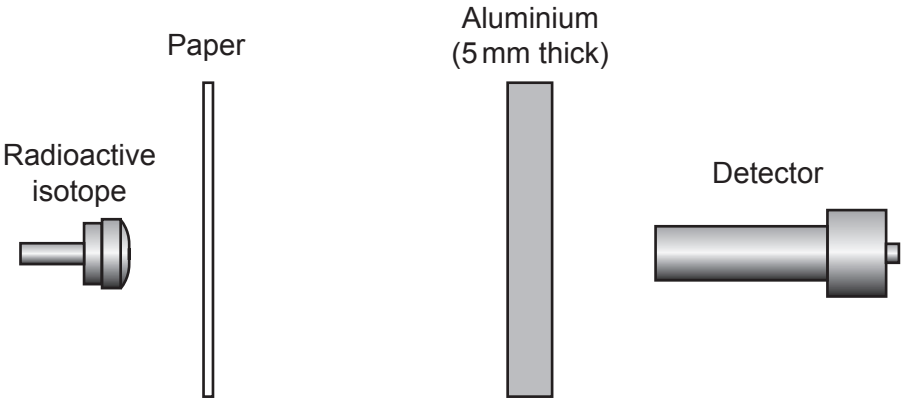

Which particles are detected by the detector?

A Alpha particles and beta particles

B Alpha particles only

C Beta particles only

D No particles

Your answer ☐ **[1]**

© OCR 2022

6 A ray of light hits a surface.

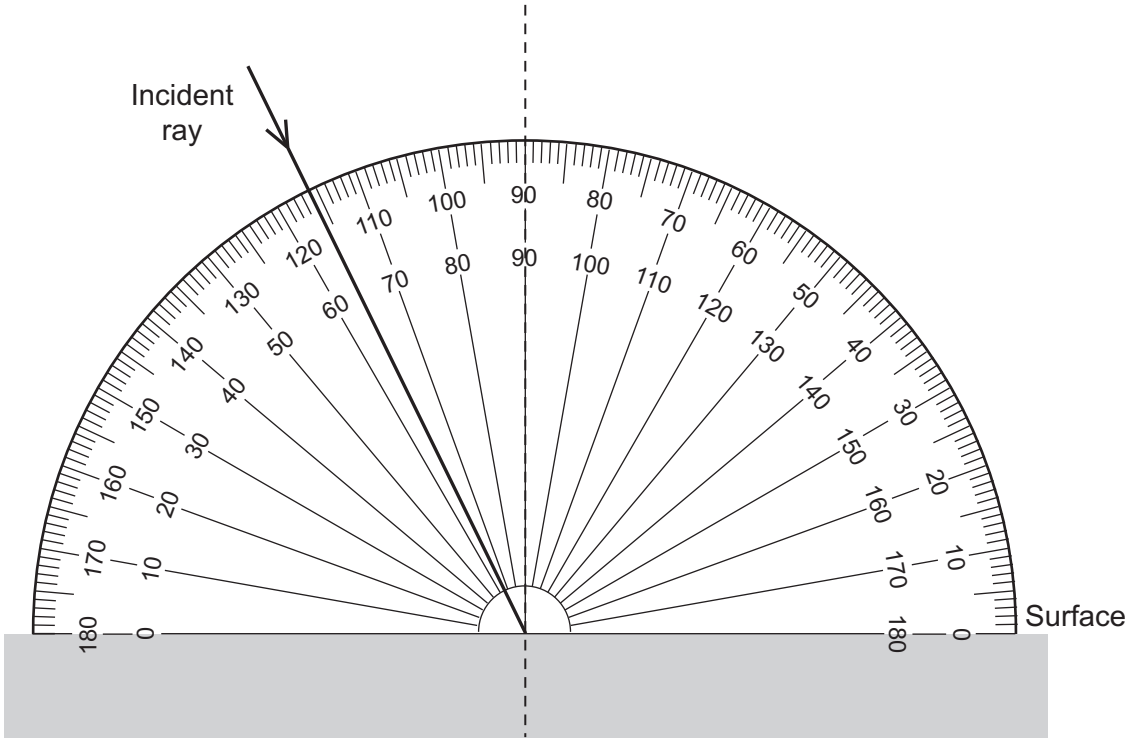

What is the angle of incidence?

A 26°

B 64°

C 76°

D 116°

Your answer ☐ **[1]**

© OCR 2022

7 What is a good estimate for the speed of an Olympic sprinter?

A 1 m/s

B 3 m/s

C 10 m/s

D 30 m/s

Your answer ☐ **[1]**

8 Which statement about the Solar System is correct?

A Mars is a star.

B Mercury is the planet closest to the Sun.

C Neptune is the planet closest to the Earth.

D Saturn is a moon.

Your answer ☐ **[1]**

© OCR 2022

9 A student increases the temperature of a metal block.

They measure how the temperature of the metal block increases with time.

The graph shows their results.

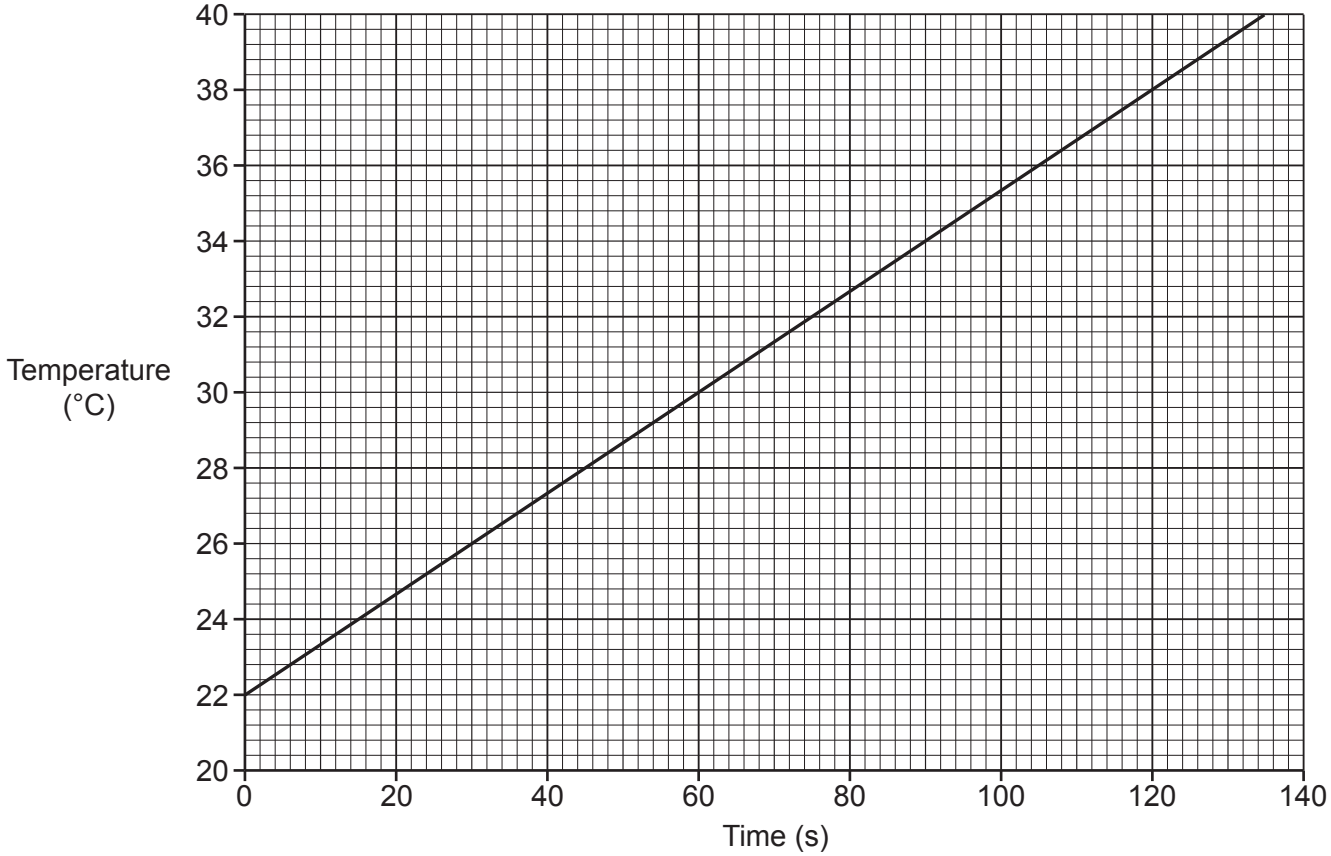

What is the increase in temperature between 60 s and 120 s?

A 8 °C

B 16 °C

C 30 °C

D 38 °C

Your answer ☐ **[1]**

© OCR 2022

10 When a car crashes, it undergoes a very large **deceleration**.

Which row describes the crash?

	Forces involved	Time for the car to decelerate
A	large	large
B	large	small
C	small	large
D	small	small

Your answer ☐ **[1]**

11 A lamp has an input energy of 200 J.

The useful output energy is 80 J.

What is the efficiency of the lamp?
Use the Data Sheet.

A 0.4

B 2.5

C 40

D 250

Your answer ☐ **[1]**

© OCR 2022

12 The diagram shows how a step-down transformer is used before electricity is transferred to houses.

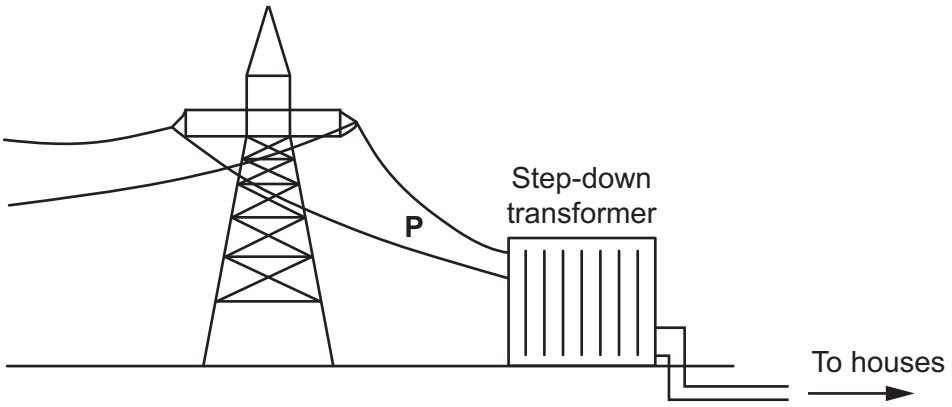

Which row gives the correct potential difference and frequency of the electricity in the wires at **P**?

	Potential difference (V)	**Frequency (Hz)**
A	230	50
B	230	230
C	400 000	50
D	400 000	230

Your answer ☐ **[1]**

© OCR 2022

13 A student shines a ray of red light at different shaped glass blocks.

Which diagram shows a correct path for the ray?

A

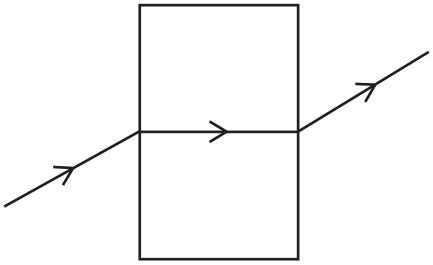

B

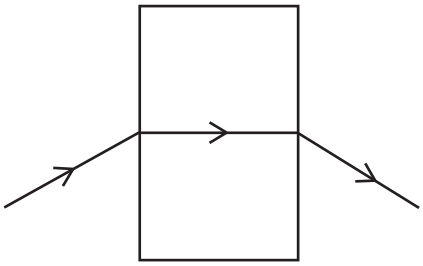

C

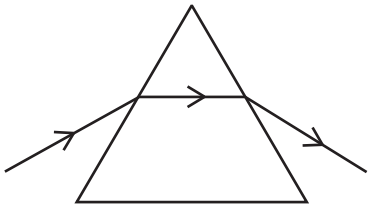

D

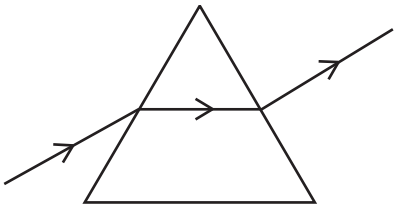

Your answer ☐ **[1]**

© OCR 2022

14 Which row describes the walls of a building with the **lowest** rate of cooling?

	Thickness of walls	Thermal conductivity of walls
A	thick	high
B	thick	low
C	thin	high
D	thin	low

Your answer ☐ **[1]**

15 The diagram shows waves that are made in a pool of water.

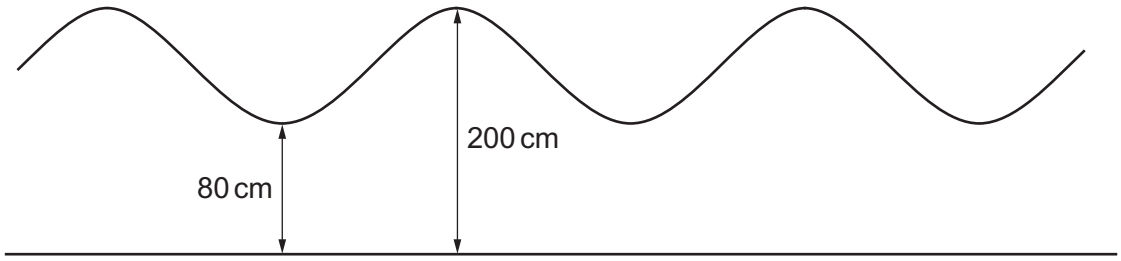

What is the amplitude of the waves?

A 60 cm

B 80 cm

C 120 cm

D 200 cm

Your answer ☐ **[1]**

© OCR 2022

SECTION B

Answer **all** the questions.

16 **(a)** This question is about electromagnetic waves.

Draw lines to connect each **wave** with its correct **use or property**.

Wave	Use or Property
Gamma-rays	Can cause sunburn
Infra-red	Highest frequency
Radio	Used in TV remotes
Ultra-violet	Longest wavelength

[3]

(b) **(i)** Which type of wave is the most dangerous?

Tick (✓) **one** box.

Infra-red ☐

Microwaves ☐

X-rays ☐

[1]

(ii) Identify **two** reasons for your answer to **(b)(i)**.

1 .....

2 .....

[2]

© OCR 2022

(c) **Fig. 16.1** shows a submarine under water.

Fig. 16.1

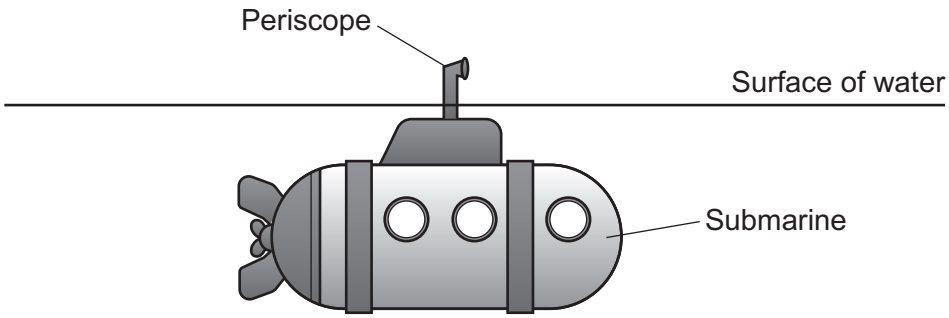

A periscope is used to look above the water. **Fig. 16.2** shows the periscope.

Fig. 16.2

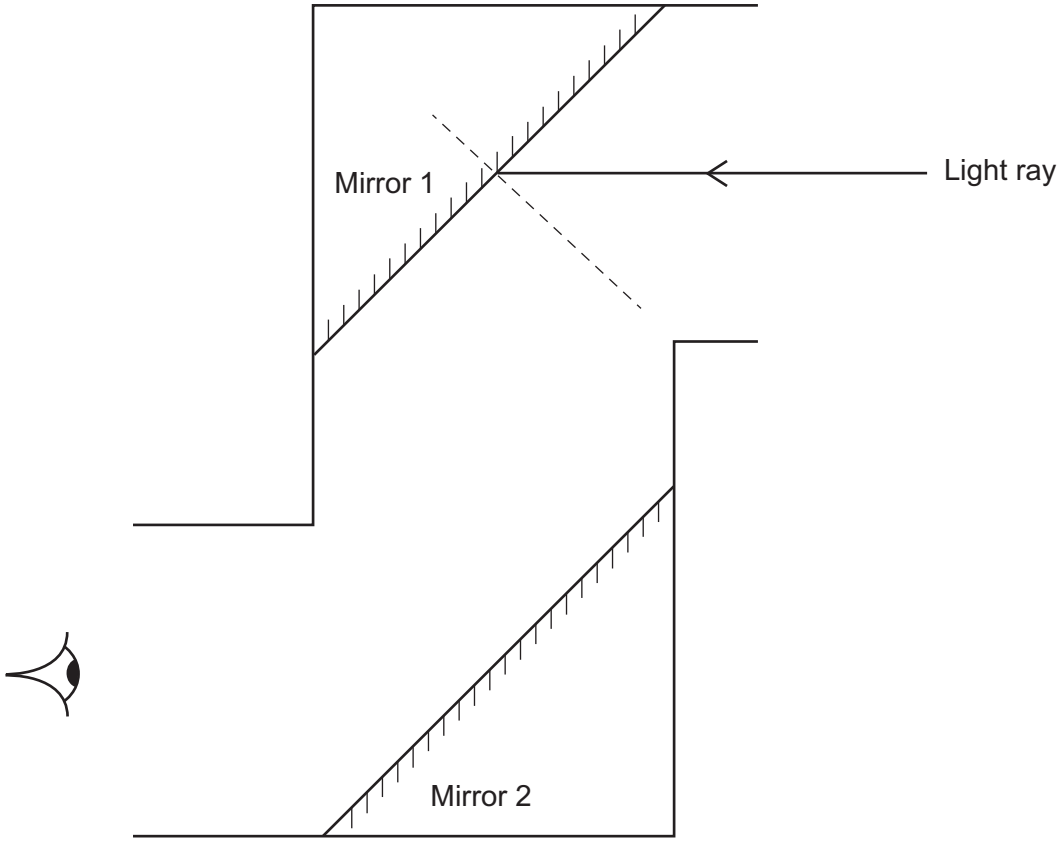

Complete the ray diagram in **Fig. 16.2** to show how light passes through the periscope to the eye.

You must include a normal line in your completed ray diagram on Mirror 2. **[3]**

© OCR 2022

(d) **(i)** A sailor uses the periscope to observe some water waves.

Six complete waves pass the periscope in **one** minute.

Calculate the time period for one wave in seconds.

Time period = ... s **[2]**

(ii) A different water wave has a frequency of 0.2 Hz.

The wavelength of the wave is 20 m.

Calculate the speed of the wave.
Use the Data Sheet.

Speed of the wave = ... m/s **[3]**

© OCR 2022

BLANK PAGE

PLEASE DO NOT WRITE ON THIS PAGE

© OCR 2022

17 Student **A** is investigating braking distance using a bicycle. This is their method:

- Freewheel down a ramp **without** pedalling.
- At the bottom of the ramp, press the brakes until the bicycle comes to a stop.
- Measure the braking distance of the bicycle from the bottom of the ramp.

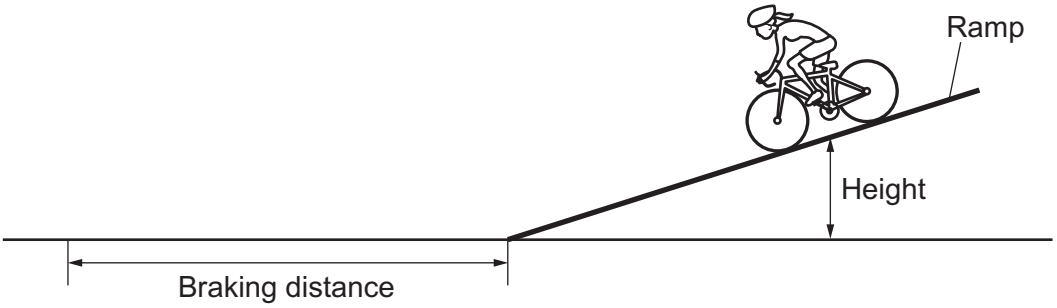

(a) Student **A** repeats the investigation three times. Each time they start at the same height. Their results are shown in the table.

Measurement number	Braking distance (m)
1	4.4
2	8.0
3	5.6

(i) Suggest what equipment student **A** can use to measure the braking distance.

..... **[1]**

(ii) Use the results from the table to calculate the **mean** braking distance.

Mean braking distance = ... m **[2]**

(iii) Suggest why the values of the braking distance are **not** the same.

.....

..... **[1]**

© OCR 2022

(b) Student **B** repeats the investigation using the same method.

The mass of student **B** and the bicycle is 80 kg.

The height of student **B** and the bicycle at the top of the ramp is 2.0 m.

Gravitational field strength = 10 N / kg.

Calculate the gravitational potential energy of student **B** and the bicycle at the top of the ramp.
Use the Data Sheet.

Gravitational potential energy = ... J **[3]**

© OCR 2022

(c) Student **C** measures the braking distance for different speeds at the bottom of the ramp.

The graph shows student **C**'s results.

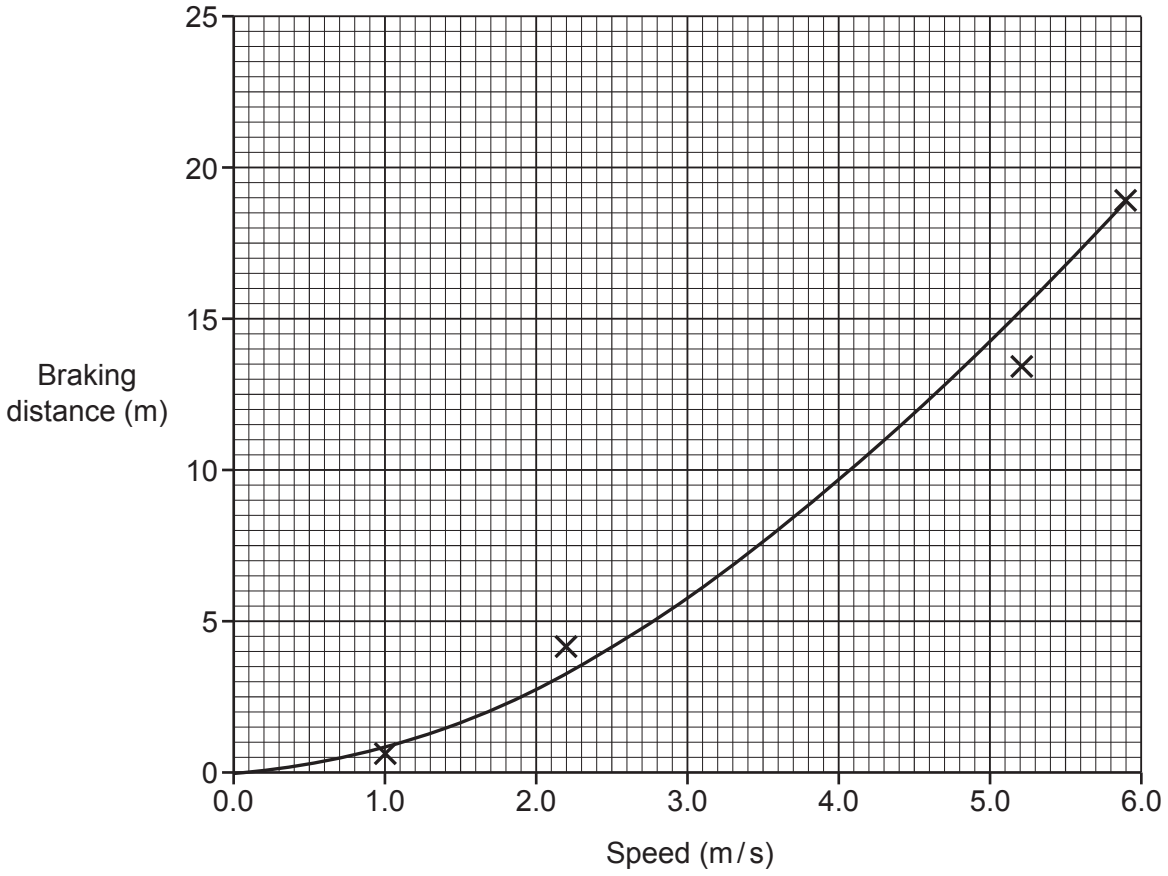

(i) Use the graph to find the braking distance when the speed is 4.3 m / s.

Braking distance = ... m **[1]**

(ii) It can be more dangerous to cycle quickly.

Use data from the graph to explain why.

.....

.....

.....

..... **[2]**

© OCR 2022

(iii) Suggest how student **C**'s investigation could be improved.

.....

..... **[1]**

(d) The students increase the mass of the bicycle.

What happens to the braking distance?

Tick (✓) **one** box.

Decreases ☐

Increases ☐

Stays the same ☐

[1]

(e) Student **D** pedals the bicycle on a level surface.

They start from rest and reach a velocity of 6 m/s.

Estimate the acceleration of student **D** on the bicycle.

Use the equation: acceleration = $\frac{\text{change in velocity}}{\text{time}}$

Acceleration = ... m/s^2 **[3]**

© OCR 2022

18 A child is watching a firework display.

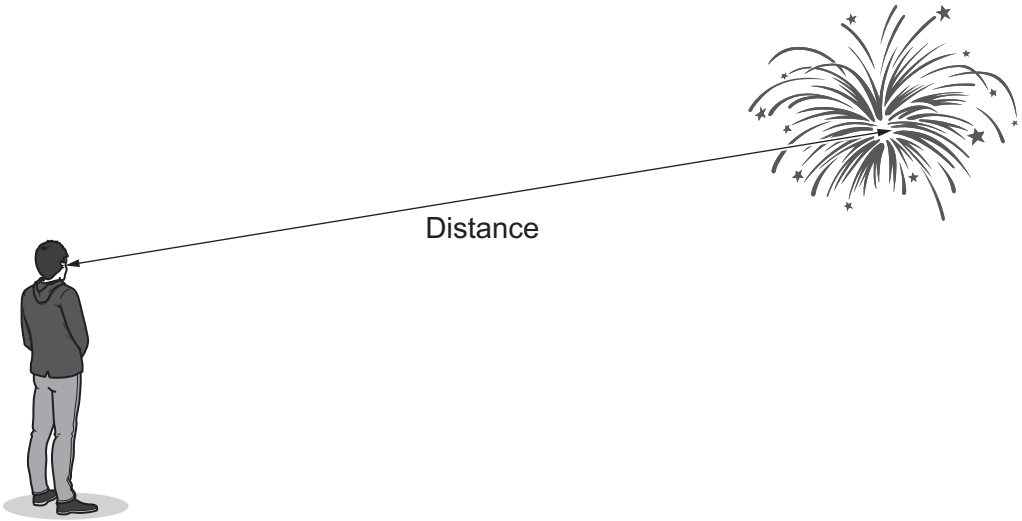

(a) The speed of light in air is 3×10^8 m/s.

Explain why the child sees the firework **before** they hear it.

.....

..... **[1]**

(b) Complete each sentence below about sound travelling through air.

Use the words from the list.

electromagnetic	**longitudinal**	**parallel**
perpendicular	**transverse**	

Sound waves are ..... .

The air particles vibrate ..... to the direction of travel of the wave.

[2]

© OCR 2022

(c) The child measures the time between seeing and hearing the firework.

The time they measure is 0.42 s.

The speed of sound in air is 330 m / s.

Calculate the distance from the child to the firework.

Give your answer to **2** significant figures.
Use the Data Sheet.

Distance = ... m **[4]**

(d) Explain why the distance calculated in **(c)** is not the actual distance.

.....

.....

.....

..... **[2]**

© OCR 2022

19 An electric water heater is used to make hot water for drinks.

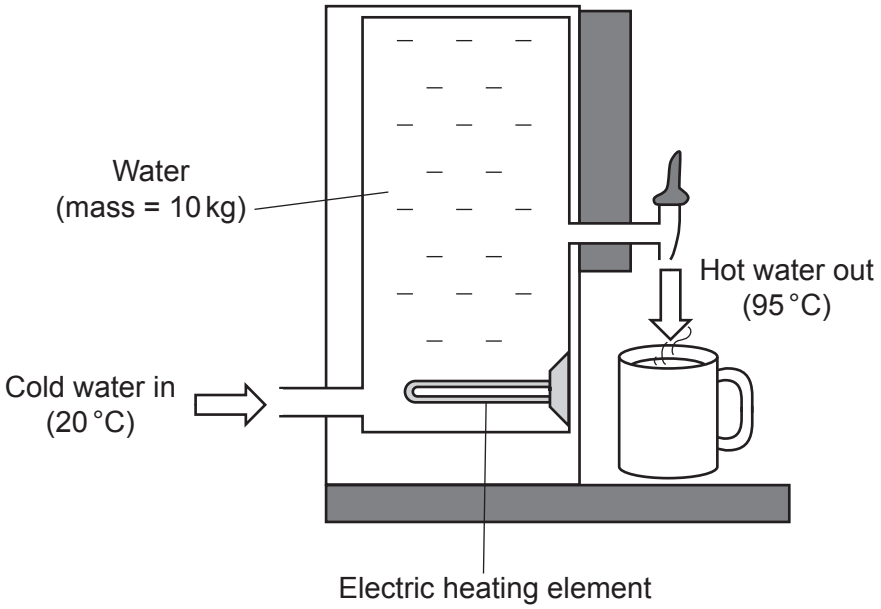

(a) The water heater is plugged into the mains supply and turned on.

Explain why the temperature of the water increases.
Write about energy stores in your answer.

.....

.....

.....

..... **[2]**

(b) The temperature of the water increases from 20 °C to 95 °C.
The mass of water is 10 kg.
The specific heat capacity of water is 4200 J / kg °C.

Calculate the energy required to increase the temperature of the water.

Use the equation:
change in thermal energy = mass × specific heat capacity × change in temperature

Energy = ... J **[3]**

© OCR 2022

(c) **(i)** The power of the water heater is 1840 W.
The p.d. of the mains supply is 230 V.

Calculate the current in the heating element.

Use the equation: power = potential difference × current

Current = ... A **[3]**

(ii) An engineer says, 'You should use a water heater with a higher current.'

Suggest **two** reasons why this is a good idea.

1 .....

.....

2 .....

.....
[2]

(d) The water heater is plugged into the mains supply.
The water heater has a metal case.

Which wire(s) should be connected in the electric plug of the water heater?

Tick (✓) one, two **or** three boxes.

Earth wire ☐

Live wire ☐

Neutral wire ☐

[1]

© OCR 2022

20 (a)* The use of coal and renewable energy resources has changed in the UK over time.

The graph shows these changes.

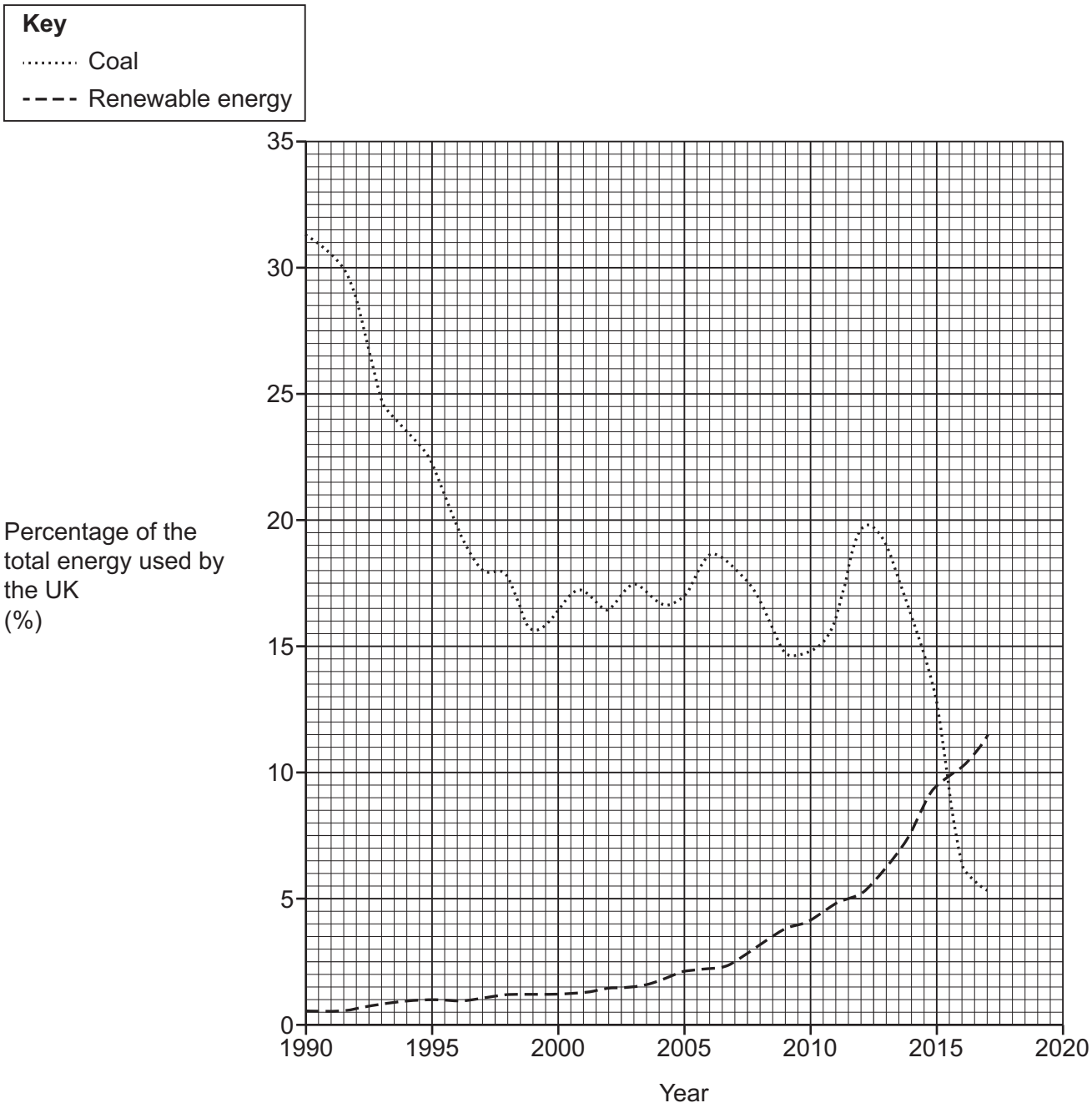

© OCR 2022

Use data from the graph to describe the changes in the use of coal and renewable energy resources.

Suggest why these changes happened.

.....

.....

.....

.....

.....

.....

.....

.....

.....

.....

.....

..... **[6]**

(b) A power station has an output power of 2×10^6 kW.

Calculate the energy produced by the power station in 3 hours.

Give your answer in kW h.

Use the equation: energy transferred = power × time

Energy = ... kW h **[2]**

© OCR 2022

21 **Fig. 21.1** shows a teacher's experiment.

The teacher pulls a wooden block through a fixed distance and calculates the work done from their measurements.

Fig. 21.1

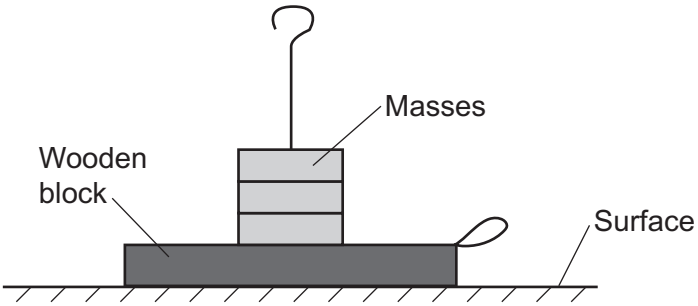

The table shows the teacher's results.

Mass (kg)	Work done (J)
0.1	1.9
0.2	2.3
0.3	2.8
0.4	3.3
0.5	3.7
0.6	4.3

(a) Describe how the teacher can do this experiment, including any equipment used.
Use the Data Sheet.

.....

.....

.....

.....

.....

..... **[3]**

© OCR 2022

(b) **(i)** Plot a graph of the data in the table and draw a line of best fit on **Fig. 21.2**.

Two of the points have already been completed for you.

Fig. 21.2

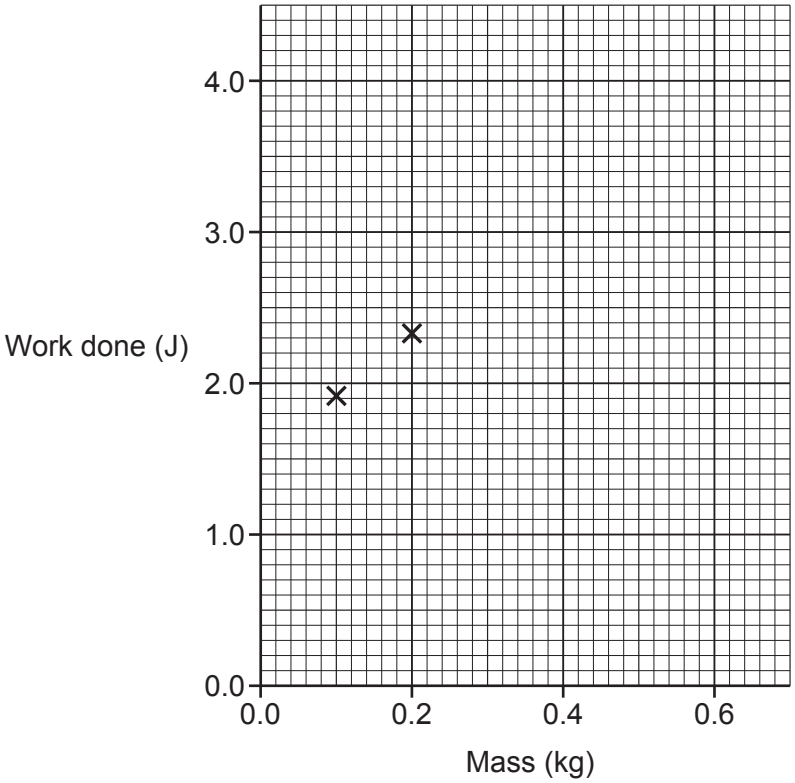

[3]

(ii) Describe the relationship between work done and mass.

.....

..... **[1]**

(c) The teacher adds a lubricant between the surface and the block.

They keep the mass of the block and distance travelled the same as before.

(i) Sketch a line on the graph to show how work done varies with mass in this new experiment.
Label this line with the letter **L**. **[1]**

(ii) Explain your reason for how you have drawn the line labelled **L** in **(c)(i)**.

.....

..... **[1]**

© OCR 2022

22 This question is about radioactivity.

(a) The nucleus of an isotope of phosphorous (P) has a relative charge of +15.
The relative mass of the nucleus is 32.

(i) Complete the symbol for this isotope.

.....
P
.....

[1]

(ii) A nucleus of this isotope emits beta radiation.

State values for the relative charge and relative mass of the nucleus after beta radiation is emitted.

Relative charge .....

Relative mass .....

[2]

(b) The table shows some information for two different isotopes of phosphorous.
The isotopes are labelled **A** and **B**.

	Relative charge	**Relative mass**
Isotope **A**	+15	29
Isotope **B**	+15	32

Complete the sentences below to describe the nucleus of isotope **A** and the nucleus of isotope **B**.

Use phrases from the list.

less than B	**more than B**	**the same as B**

The number of protons in the nucleus of **A** is …… .

The number of neutrons in the nucleus of **A** is …… .

[2]

© OCR 2022

(c) A doctor needs to explore a patient's internal organs. The doctor follows these steps:

- Injects a radioactive isotope into the patient.
- Sets up a special camera outside the patient's body.
- Uses the camera to detect radiation emitted from the isotope.

(i) Which radiation should be emitted by the isotope?

Tick (✓) **one** box.

Alpha ☐

Beta ☐

Gamma ☐

State a reason for your answer.

.....

..... **[2]**

(ii) There are three different isotopes with the following half-lives:

4 minutes	**6 hours**	**18 days**

The doctor chooses the isotope with a half-life of **6 hours**.

Suggest **two** reasons why **6 hours** is the most suitable half-life.

1 .....

.....

2 .....

.....

[2]

END OF QUESTION PAPER

© OCR 2022

ADDITIONAL ANSWER SPACE

If additional space is required, you should use the following lined page(s). The question number(s) must be clearly shown in the margin(s).

© OCR 2022

© OCR 2022

OCR
Oxford Cambridge and RSA

Copyright Information

OCR is committed to seeking permission to reproduce all third-party content that it uses in its assessment materials. OCR has attempted to identify and contact all copyright holders whose work is used in this paper. To avoid the issue of disclosure of answer-related information to candidates, all copyright acknowledgements are reproduced in the OCR Copyright Acknowledgements Booklet. This is produced for each series of examinations and is freely available to download from our public website (www.ocr.org.uk) after the live examination series.

If OCR has unwittingly failed to correctly acknowledge or clear any third-party content in this assessment material, OCR will be happy to correct its mistake at the earliest possible opportunity.

For queries or further information please contact The OCR Copyright Team, The Triangle Building, Shaftesbury Road, Cambridge CB2 8EA.

OCR is part of Cambridge University Press & Assessment, which is itself a department of the University of Cambridge.

© OCR 2022