OCR
Oxford Cambridge and RSA

F

Thursday 9 June 2022 – Afternoon

GCSE (9–1) Physics A (Gateway Science)

J249/01 Paper 1 (Foundation Tier)

Time allowed: 1 hour 45 minutes

You must have:
- a ruler (cm/mm)
- the Data Sheet for GCSE (9–1) Physics A (inside this document)

You can use:
- a scientific or graphical calculator
- an HB pencil

Please write clearly in black ink. **Do not write in the barcodes.**

Centre number | | | | | | Candidate number | | | | |

First name(s) _____

Last name _____

INSTRUCTIONS
- Use black ink. You can use an HB pencil, but only for graphs and diagrams.
- Write your answer to each question in the space provided. If you need extra space use the lined pages at the end of this booklet. The question numbers must be clearly shown.
- Answer **all** the questions.
- Where appropriate, your answer should be supported with working. Marks might be given for a correct method, even if the answer is wrong.

INFORMATION
- The total mark for this paper is **90**.
- The marks for each question are shown in brackets **[ ]**.
- Quality of extended response will be assessed in questions marked with an asterisk (*****).
- This document has **28** pages.

ADVICE
- Read each question carefully before you start your answer.

© OCR 2022 [601/8651/3]
DC (ST/SG) 301216/6
OCR is an exempt Charity

SECTION A

Answer **all** the questions.

You should spend a maximum of 30 minutes on this section.

Write your answer to each question in the box provided.

1 10 g of ice melts and then evaporates.

What is the mass of the **gas** produced?

A 0 g

B 1 g

C 10 g

D 11 g

Your answer ☐ **[1]**

2 Which is a **contact** force?

A Electrostatic

B Gravity

C Magnetism

D Upthrust

Your answer ☐ **[1]**

3 All objects have a gravitational field that causes attraction.

Which property affects the gravitational field strength of an object?

A Charge

B Mass

C Specific heat capacity

D Temperature

Your answer ☐ **[1]**

© OCR 2022

4 Which graph shows the relationship between temperature and resistance for a NTC thermistor?

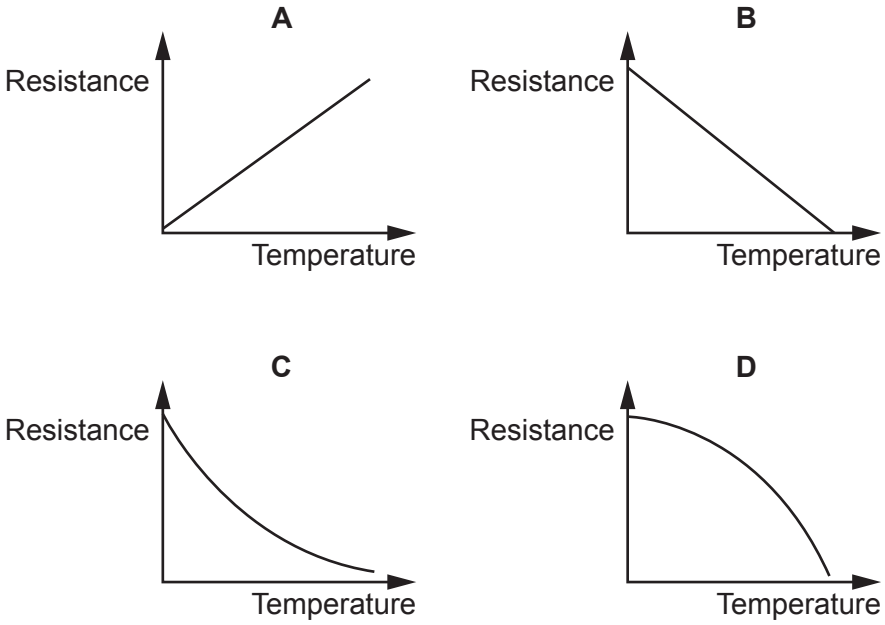

Your answer ☐ **[1]**

5 A bird flies at an average speed of 5.0 m / s for 240 s.

What is the distance travelled by the bird?

Use the equation: distance travelled = speed × time

A 0.8 m

B 20 m

C 48 m

D 1200 m

Your answer ☐ **[1]**

© OCR 2022

6 A student places a magnet next to a copper rod and then an iron rod.

	Copper rod	Iron rod
A	attracts	attracts
B	attracts	repels
C	nothing happens	attracts
D	nothing happens	repels

Which row in the table describes what happens?

Your answer ☐ **[1]**

7 Why does atmospheric pressure decrease as the height above the Earth's surface increases?

A The distance from the equator decreases.

B The number of air molecules above you decreases.

C The temperature of the air increases.

D The weight of each air molecule increases.

Your answer ☐ **[1]**

8 A student is studying examples of physical and chemical changes.

	Chemical change	Physical change
A	boiling water	frying an egg
B	boiling water	melting ice
C	burning wood	frying an egg
D	burning wood	melting ice

Which row in the table shows a correct example of a chemical change and a physical change?

Your answer ☐ **[1]**

© OCR 2022

9 Mercury has a melting point of –40 °C and a boiling point of 357 °C.

	State at –20 °C	State at 300 °C
A	solid	gas
B	solid	liquid
C	liquid	liquid
D	liquid	gas

Which row in the table is correct?

Your answer ☐ **[1]**

10 A student rubs two objects together. The two objects become **charged**.

	Type of objects	Charges which move
A	two insulators	positive
B	two insulators	negative
C	two metals	positive
D	two metals	negative

Which row in the table is correct?

Your answer ☐ **[1]**

© OCR 2022

11 The diagram shows a gas in a sealed syringe.

The plunger is pushed half-way into the syringe. The gas temperature stays constant.

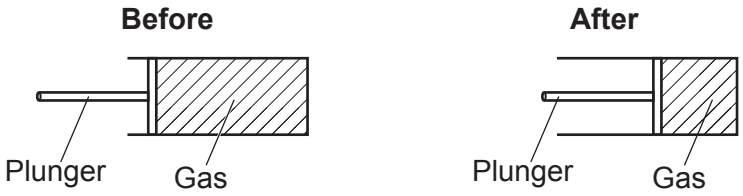

	Volume	Pressure
A	doubles	halves
B	doubles	doubles
C	halves	doubles
D	halves	halves

Which row in the table describes what happens to the volume and pressure of the gas?

Your answer ☐ **[1]**

© OCR 2022

12 A student with a weight of 500 N sits on the left-hand side of a see-saw, 0.8 m from the pivot point. Another student then sits on the right-hand side of the pivot point.

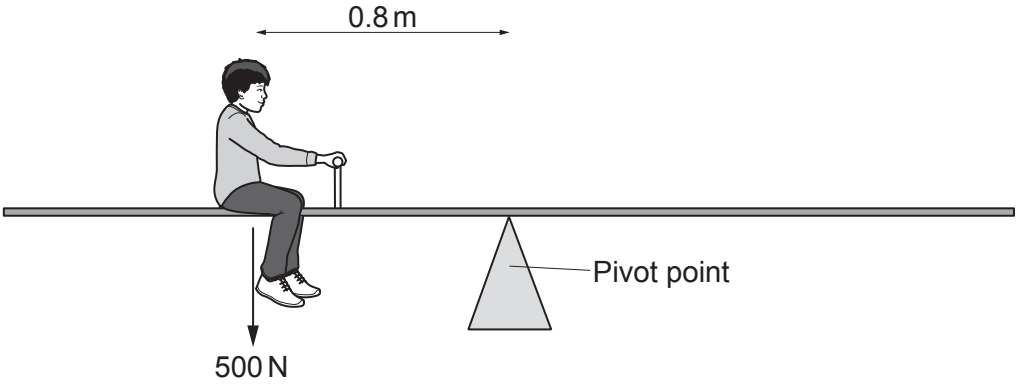

Which student will balance the see-saw when they sit on the right-hand side of the pivot point?

Use the equation: moment of a force = force × distance (normal to direction of the force)

	Moment of the student's weight (N)
A	40
B	62.5
C	400
D	625

Your answer ☐ **[1]**

© OCR 2022

13 A student sets up an electrical circuit as shown in the diagram.

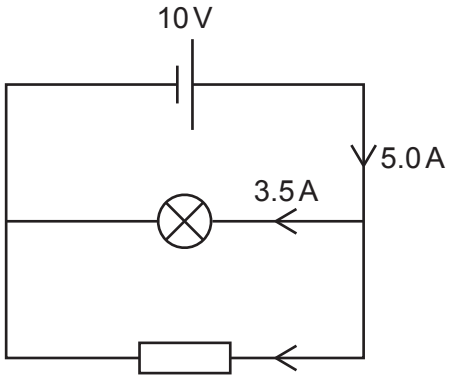

What is the value of the current flowing through the fixed resistor?

A 1.5 A

B 3.5 A

C 5.0 A

D 8.5 A

Your answer ☐ **[1]**

14 What is an induced magnet?

A A permanent magnet which is always magnetic.

B A permanent magnet with two identical poles.

C A temporary magnet which is only magnetic when it is within a magnetic field.

D A temporary magnet with two identical poles.

Your answer ☐ **[1]**

15 A dog has a mass of 10 kg and runs at a speed of 14 m/s.

What is the kinetic energy of the dog?

Use the equation: kinetic energy = 0.5 × mass × $(\text{speed})^2$

A 70 J

B 196 J

C 980 J

D 1960 J

Your answer ☐ **[1]**

© OCR 2022

SECTION B

Answer **all** the questions.

16 **(a)** The diagram shows a simple model of an atom.

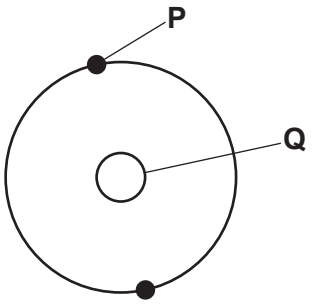

Answer the questions using words from the list.

electron	**negative**	**neutral**	**neutron**	**nucleus**	**proton**

(i) What is the name of the part of the atom labelled **Q**?

..... **[1]**

(ii) Which **two** particles are found within part **Q**?

..... and ..... **[2]**

(iii) What is the name of the particle labelled **P**?

..... **[1]**

(iv) What is the overall charge on an atom?

..... **[1]**

(b) Suggest why the model of the atom has changed over time.

.....

.....

.....

..... **[2]**

© OCR 2022

17 A teacher investigates the resistance of a filament lamp.

Fig. 17.1 shows the circuit the teacher uses.

Fig. 17.1

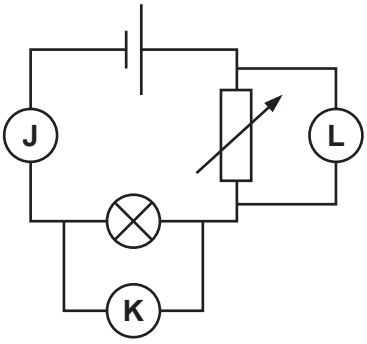

(a) The teacher takes measurements of the current through the filament lamp and the potential difference across it.

In which position, **J**, **K** or **L**, should the teacher place the ammeter and voltmeter?

Ammeter position: ..... Voltmeter position: ..... **[2]**

(b) Four students discuss the purpose of the component 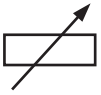 in this circuit.

Student **A** says: "It is used to change the current flowing in the circuit."

Student **B** says: "It is used to change the resistance of the cell."

Student **C** says: "It is used to change the potential difference of the cell."

Student **D** says: "It is used to change the total resistance of the circuit."

Which **two** students have made a correct statement about the component?

Tick (✓) **two** boxes.

A ☐ **B** ☐ **C** ☐ **D** ☐ **[2]**

(c) The teacher records their results in the table and plots the graph shown in **Fig. 17.2**.

Potential difference (V)	Current (A)
0.0	0.0
2.0	1.6
4.0	2.4
6.0	3.1
8.0	3.6
10.0	4.0

© OCR 2022

Fig. 17.2

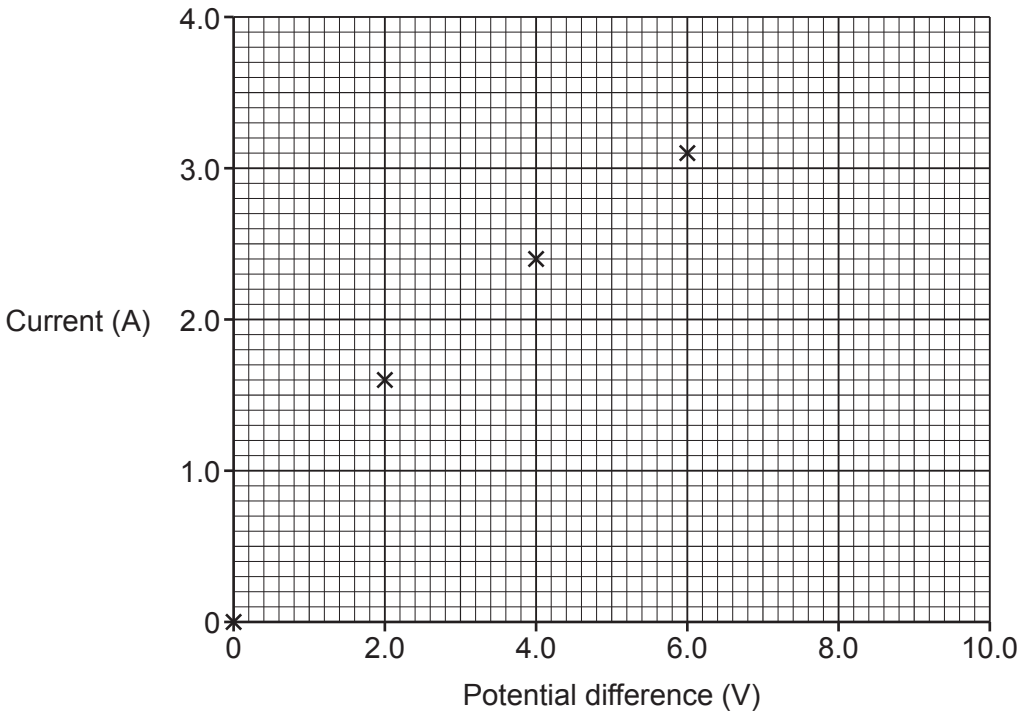

(i) Plot the **two** missing points on **Fig. 17.2** and draw a line of best fit. **[2]**

(ii) Calculate the power dissipated by the filament lamp when the potential difference is 5.0 V.

Use **Fig. 17.2** and the equation: power = potential difference × current

Power = ... W **[2]**

(iii) Calculate the energy transferred if the filament lamp is used for 2 minutes.

Use your answer from **(b)(ii)** and the equation: energy transferred = power × time

Energy = ... J **[3]**

© OCR 2022

18 A fridge magnet is used to hold pieces of paper onto a metal fridge.

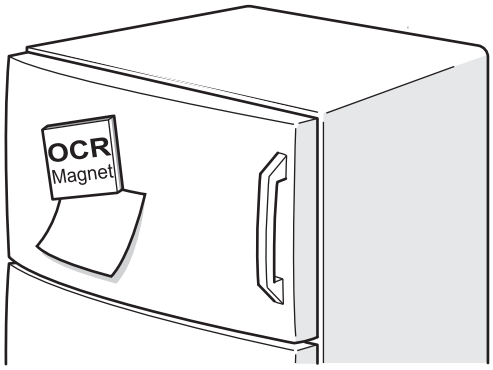

A student tests the strength of **three** square fridge magnets using this method:

- Place pieces of paper between each magnet and the fridge
- Increase the amount of pieces of paper until the magnets no longer stick to the fridge.

(a) Suggest **two** variables that the student should keep the same for this experiment.

1 .....

2 .....
[2]

(b) The student tests three different magnets **A**, **B** and **C** and puts their results into a table.

Magnet	Maximum number of pieces of paper held by the magnet
A	24
B	20
C	26

Which magnet is the strongest? Give a reason for your answer.

Magnet: .....

Reason: .....

.....
[1]

© OCR 2022

(c) The front and back faces of the fridge magnets are the poles.

The student draws four magnetic field line diagrams for a fridge magnet.

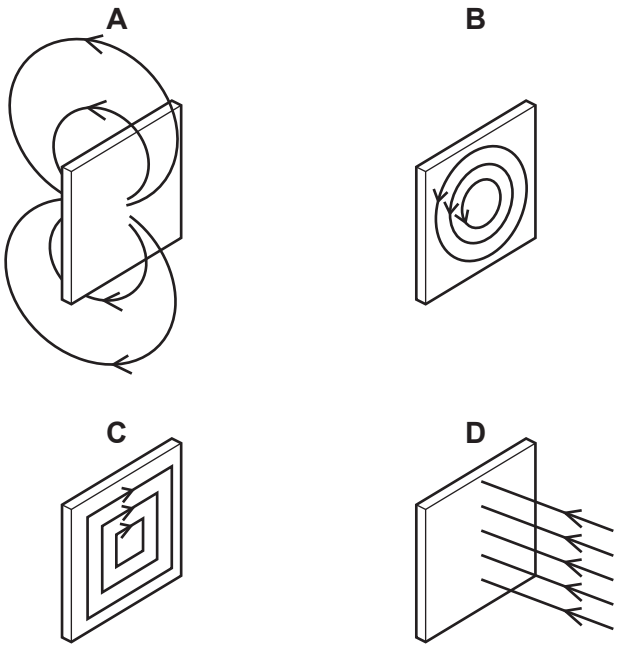

(i) Which diagram, **A**, **B**, **C** or **D**, shows the correct magnetic field around a fridge magnet?

..... **[1]**

(ii) How does this diagram show the direction of the magnetic field?

..... **[1]**

(d) The student writes a method to plot the magnetic field around a bar magnet using a plotting compass.

1 Join the dots together on the paper to show the field line.

2 Move the compass so that the opposite end of its arrow points to the dot you have just drawn.

3 Place the magnet on a piece of paper and draw around the magnet.

4 Place the compass near to one end of the bar magnet and mark where the compass arrow points to with a dot.

5 Draw another dot on the paper for the new compass position and repeat.

The student has written their method steps in the wrong order.

Write down the correct order for their method.

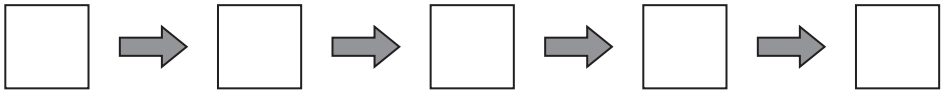

[2]

© OCR 2022

19* A group of students investigate the resistance of an LDR.
The students change the distance between the LDR and the lamp and measure the resistance of the LDR.

The results are plotted on a graph.

Fig. 19.1 shows the experiment set-up and **Fig. 19.2** shows the graph of the students' results.

Fig. 19.1

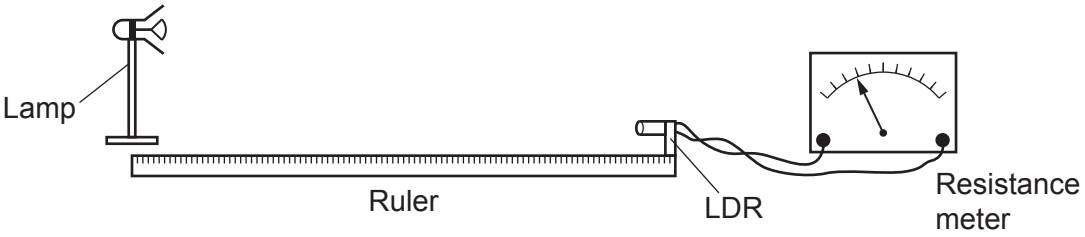

Fig. 19.2

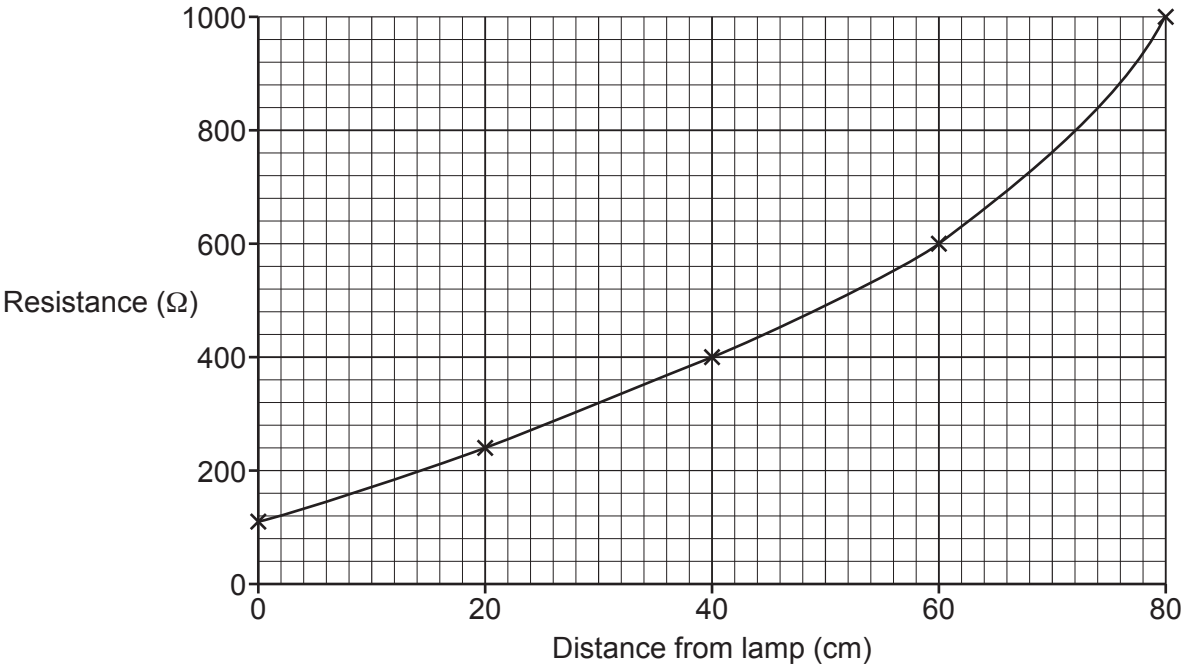

© OCR 2022

Describe the trend shown by the graph in **Fig. 19.2**. Use data from the graph in your answer. Suggest how the students could improve the accuracy and precision of their results.

.....

.....

.....

.....

.....

.....

.....

.....

.....

.....

.....

..... **[6]**

© OCR 2022

20 A student investigates density using cubes made of different types of material.

Each cube has dimensions of 5 cm × 5 cm × 5 cm.

(a) Calculate the volume of **one** cube.

Volume = ... cm^3 **[1]**

(b) The table and the bar chart show the student's results.

Material	Density (kg/m^3)
carbon fibre	1800
oak	760
pine	520
plastic	1100

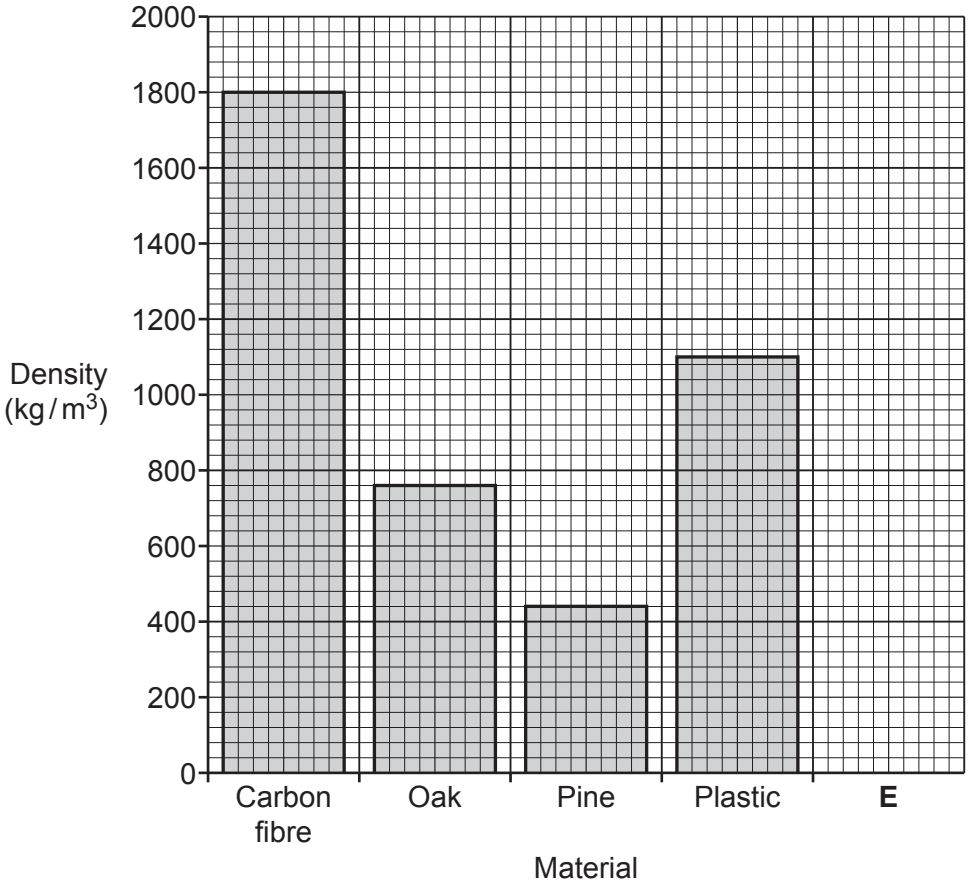

(i) The student makes a mistake when drawing one of the bars.
Identify the mistake that the student has made.

.....

..... **[1]**

(ii) Water has a density of 1000 kg/m^3. Draw a bar for water in space **E** on the bar chart.
[1]

© OCR 2022

(iii) The student wants to make a simple solid toy boat which can carry a heavy load.

Suggest which material the student should use. Explain your answer.

Material: .....

Explanation: .....

.....

[2]

(c) Which **two** properties affect the density of an object?

Put a ring around the **two** correct answers.

mass of particles	**particle arrangement**	**position on Earth**	**specific heat capacity**

[2]

© OCR 2022

21 The diagram shows a swimmer in a pool.

(a) Their forward force is 50 N and the resistive force is 50 N.

(i) Describe the motion of the swimmer.

..... **[1]**

(ii) Explain what happens to the swimmer if their forward force increases but the resistive force remains constant.

.....

.....

..... **[2]**

(b) The swimmer swims from one end of the pool to the other end at a constant speed. They then turn round and swim back at the same constant speed.

(i) Here are 4 displacement–time graphs, **P**, **Q**, **R** and **S**.

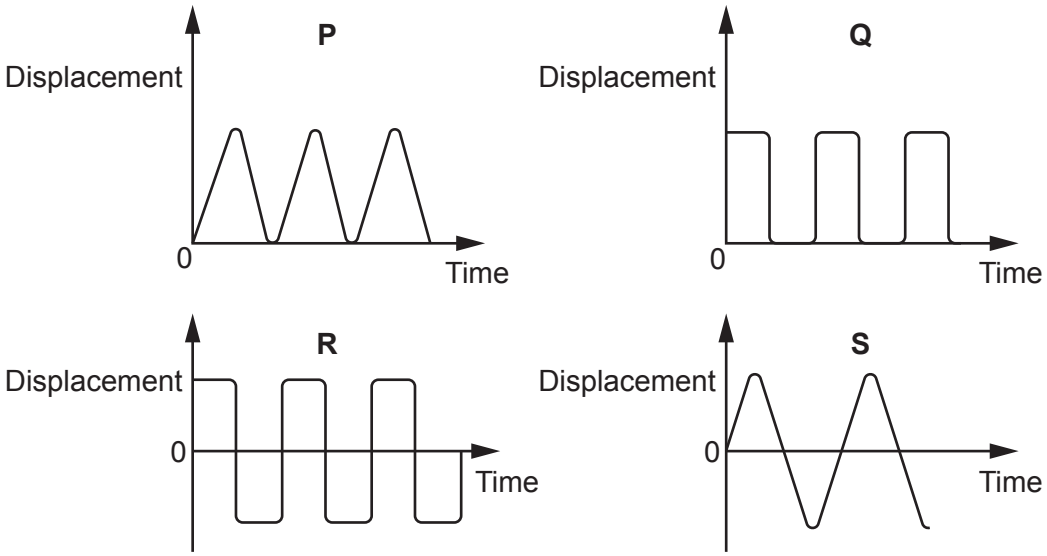

Which displacement–time graph shows the swimmer swimming to the end of the pool and back several times?

..... **[1]**

© OCR 2022

(ii) Here are 4 velocity–time graphs, **W**, **X**, **Y** and **Z**.

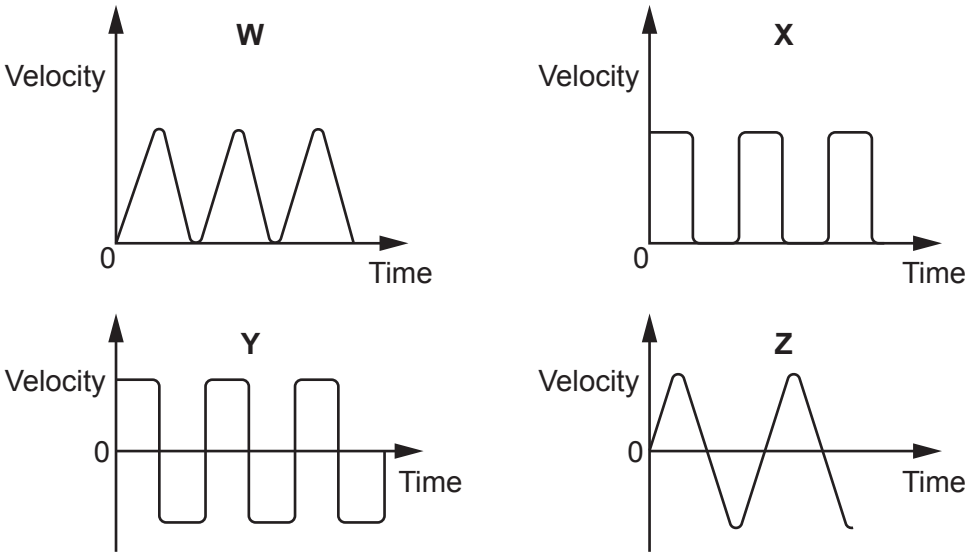

Which velocity–time graph shows them swimming to the end of the pool and back several times?

..... **[1]**

(c) The swimmer has a mass of 75 kg. Calculate their weight.

Use the equation: gravitational force = mass × gravitational field strength

Weight = ... N **[3]**

© OCR 2022

22 A climber investigates how a rope stretches with different forces. The climber's results are shown in the table.

Force (N)	Extension (m)
0	0.00
10	0.15
20	0.3
30	0.45
40	0.60

(a) The climber has made a mistake when recording their results.

Identify the mistake and suggest how it could be corrected.

Mistake: .....

Correction: .....
[2]

(b) **(i)** Calculate the spring constant for the rope.

Give your answer to **two** significant figures.

Use the equation: force = extension × spring constant

Spring constant = ... N/m **[4]**

(ii) Calculate the energy transferred when the rope is stretched with a force of 40 N.

Use the Data Sheet.

Energy transferred in stretching = ... J **[2]**

© OCR 2022

(iii) A 200 N force is attached to the rope.

Suggest what extension the rope would have if it does not exceed its elastic limit.

..... **[1]**

(c) When a force of 500 N is applied, the rope exceeds its elastic limit.

Explain what this means.

.....

.....

.....

..... **[2]**

© OCR 2022

23 Two students decide to determine the mean speed of cars passing outside their school.

(a) Describe how the students will take the measurements they need to be able to calculate the mean speed of a car.

.....

.....

.....

.....

.....

..... **[4]**

(b) The students also investigate the motion of two battery-powered toy cars, **A** and **B**.
The velocity–time graph shows their results.

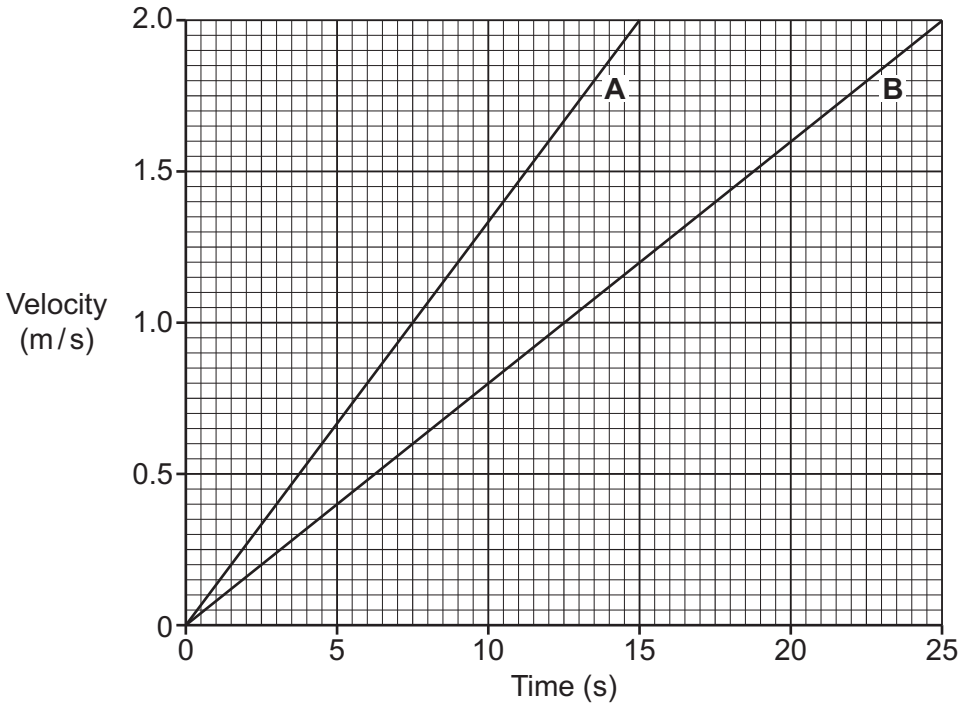

(i) Which toy car, **A** or **B**, has the greater acceleration? Explain your answer.

Car .....

Reason .....

[1]

© OCR 2022

(ii) Use the graph to calculate the acceleration of car **B**.

Acceleration = ... m/s^2 **[3]**

(iii) Both cars have the same mass.

Suggest why it takes different amounts of time for them to reach their top speeds.

..... **[1]**

© OCR 2022

24 A scientist sets up an electrical circuit.

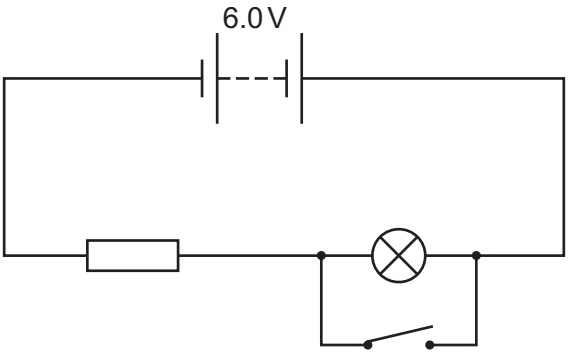

The lamp and the resistor each have a resistance of 5.0 Ω so that the total resistance in the circuit is 10.0 Ω.

(a) **(i)** Calculate the current in the circuit when the switch is open.
Use the Data Sheet.

Current = ... A **[3]**

(ii) State the potential difference across the resistor when the switch is open.

Potential difference = ... V **[1]**

(b) The switch is now **closed**.

(i) Describe how the current through the resistor changes. Explain your answer.

.....

.....

..... **[2]**

(ii) Describe how the potential difference across the resistor changes. Explain your answer.

.....

.....

..... **[2]**

(iii) State the potential difference across the lamp when the switch is closed.

Potential difference = ... V **[1]**

END OF QUESTION PAPER

© OCR 2022

ADDITIONAL ANSWER SPACE

If additional space is required, you should use the following lined page(s). The question number(s) must be clearly shown in the margin(s).

© OCR 2022

© OCR 2022

© OCR 2022

OCR
Oxford Cambridge and RSA

Copyright Information

OCR is committed to seeking permission to reproduce all third-party content that it uses in its assessment materials. OCR has attempted to identify and contact all copyright holders whose work is used in this paper. To avoid the issue of disclosure of answer-related information to candidates, all copyright acknowledgements are reproduced in the OCR Copyright Acknowledgements Booklet. This is produced for each series of examinations and is freely available to download from our public website (www.ocr.org.uk) after the live examination series.

If OCR has unwittingly failed to correctly acknowledge or clear any third-party content in this assessment material, OCR will be happy to correct its mistake at the earliest possible opportunity.

For queries or further information please contact The OCR Copyright Team, The Triangle Building, Shaftesbury Road, Cambridge CB2 8EA.

OCR is part of Cambridge University Press & Assessment, which is itself a department of the University of Cambridge.

© OCR 2022