OCR
Oxford Cambridge and RSA

F

Friday 14 June 2019 – Morning

GCSE (9–1) Physics A (Gateway Science)

J249/02 Paper 2 (Foundation Tier)

Time allowed: 1 hour 45 minutes

You must have:
- a ruler (cm/mm)
- the Data Sheet (for GCSE Physics A (inserted))

You may use:
- a scientific or graphical calculator
- an HB pencil

Please write clearly in black ink. **Do not write in the barcodes.**

Centre number | | | | | | Candidate number | | | | |

First name(s) _____

Last name _____

INSTRUCTIONS
- The data sheet will be found inside this document.
- Use black ink. You may use an HB pencil for graphs and diagrams.
- Answer **all** the questions.
- Where appropriate, your answers should be supported with working. Marks may be given for a correct method even if the answer is incorrect.
- Write your answer to each question in the space provided. If additional space is required, use the lined page(s) at the end of this booklet. The question number(s) must be clearly shown.

INFORMATION
- The total mark for this paper is **90**.
- The marks for each question are shown in brackets **[ ]**.
- Quality of extended responses will be assessed in questions marked with an asterisk (*).
- This document consists of **32** pages.

© OCR 2019 [601/8651/3]
DC (JP/TP) 174169/5
OCR is an exempt Charity

SECTION A

You should spend a maximum of 30 minutes on this section.

Answer **all** the questions.

Write your answer to each question in the box provided.

1 Which statement describes the domestic electricity supply in the UK?

A 50 V a.c. at 230 Hz

B 50 V d.c. at 230 Hz

C 230 V a.c. at 50 Hz

D 230 V d.c. at 50 Hz

Your answer ☐ **[1]**

2 A teacher measures the speed of water waves in a ripple tank.

What apparatus should she use?

A Ammeter and stopwatch

B Newton-meter and ruler

C Ruler and protractor

D Ruler and stopwatch

Your answer ☐ **[1]**

3 What type of wave is light?

A A longitudinal electromagnetic wave

B A longitudinal P wave

C A transverse S wave

D A transverse electromagnetic wave

Your answer ☐ **[1]**

© OCR 2019

4 Which statement is **true** for electromagnetic waves?

A High frequency electromagnetic waves have a long wavelength.

B High frequency electromagnetic waves have no wavelength.

C Low frequency electromagnetic waves have a long wavelength.

D Low frequency electromagnetic waves have a short wavelength.

Your answer ☐ **[1]**

5 A boiler has an input energy of 720 kJ from the gas it burns.

It transfers 540 kJ of useful energy to the home.

What is the efficiency of the boiler?

Use the equation: efficiency = useful output energy transfer ÷ total input energy transfer

A 0.12

B 0.75

C 0.90

D 1.33

Your answer ☐ **[1]**

© OCR 2019

6 Here are some graphs for the potential difference (p.d.) of four electrical supplies.

Which graph shows a direct voltage?

A

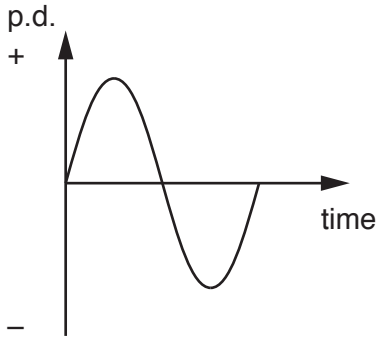

B

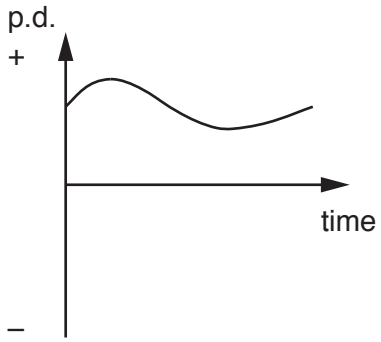

C

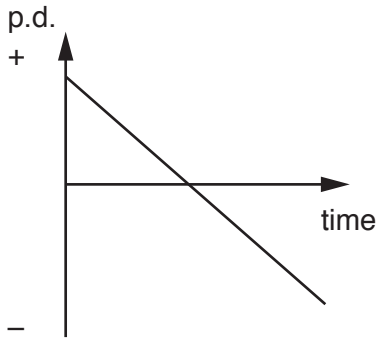

D

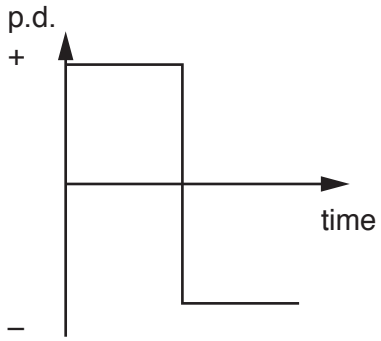

Your answer ☐ **[1]**

© OCR 2019

7 Which diagram shows reflection of a light ray using a plane mirror?

A

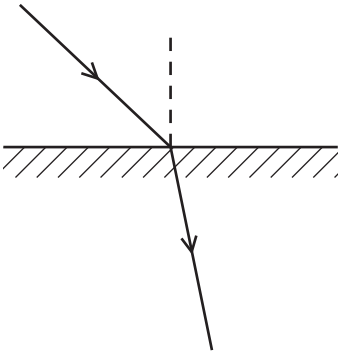

B

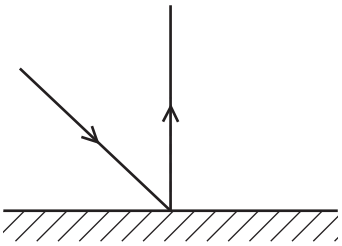

C

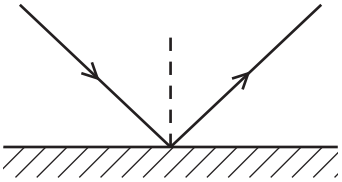

D

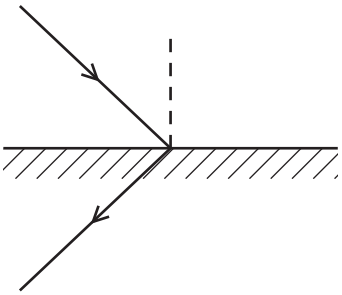

Your answer ☐ **[1]**

© OCR 2019

8 Which row in the table is correct?

	Electromagnetic wave	Use
A	Radio	Killing bacteria
B	Microwaves	Mobile phones
C	X-rays	Optical fibres
D	Gamma rays	Tanning beds

Your answer ☐ **[1]**

9 A runner has a mass of 80 kg and moves at a speed of 5 m/s.

Calculate the kinetic energy of the runner.

Use the equation: kinetic energy = 0.5 × mass × $(\text{speed})^2$

A 200 J

B 1000 J

C 2000 J

D 40 000 J

Your answer ☐ **[1]**

10 Which row in the table correctly describes how the national grid transfers electrical energy efficiently?

	Voltage	Current	Reason
A	High	High	To increase heating in wires.
B	High	Low	To reduce heating in wires.
C	Low	High	To reduce heating in wires.
D	Low	Low	To reduce heating in wires.

Your answer ☐ **[1]**

© OCR 2019

11 The acceleration of a car is $2\,m/s^2$. The mass of the car is 1000 kg.

Calculate the resultant force on the car.

A 20 N

B 200 N

C 2000 N

D 20 000 N

Your answer ☐ **[1]**

12 Which radioactive decay equation is correct?

A $^{14}_{6}C \rightarrow ^{10}_{4}Be + ^{0}_{-1}e$

B $^{14}_{6}C \rightarrow ^{10}_{4}Be + ^{0}_{0}\gamma$

C $^{14}_{6}C \rightarrow ^{14}_{7}N + ^{4}_{2}He$

D $^{14}_{6}C \rightarrow ^{14}_{7}N + ^{0}_{-1}e$

Your answer ☐ **[1]**

13 The table shows the current and potential difference (p.d.) for four different transformers.

Which row shows the correct data for a **step-up** transformer?

	Primary coil		**Secondary coil**	
	p.d. (V)	**Current (A)**	**p.d. (V)**	**Current (A)**
A	6	4	12	2
B	12	2	3	8
C	12	2	12	2
D	12	2	24	1.5

Your answer ☐ **[1]**

© OCR 2019

14 A sound wave travels in air and enters water.

What happens to the sound wave as it enters the water?

	Speed	Frequency	Wavelength
A	decreases	decreases	decreases
B	decreases	stays the same	decreases
C	increases	increases	increases
D	increases	stays the same	increases

Your answer ☐ **[1]**

15 An electromagnetic wave transfers energy.

Which row in the table is correct?

	Electromagnetic wave	Energy transfer
A	Infra-red	From a heating element of a toaster to the bread inside
B	Radio	From a radio to a transmitter
C	Gamma rays	From a high voltage supply to heating water in food
D	X-rays	From bones in the body to an X-ray machine

Your answer ☐ **[1]**

© OCR 2019

BLANK PAGE

PLEASE DO NOT WRITE ON THIS PAGE

© OCR 2019

SECTION B

Answer **all** the questions.

16 A student investigates how the thickness of insulation affects the cooling of a cup of tea.

Fig. 16.1 is a diagram of her apparatus.

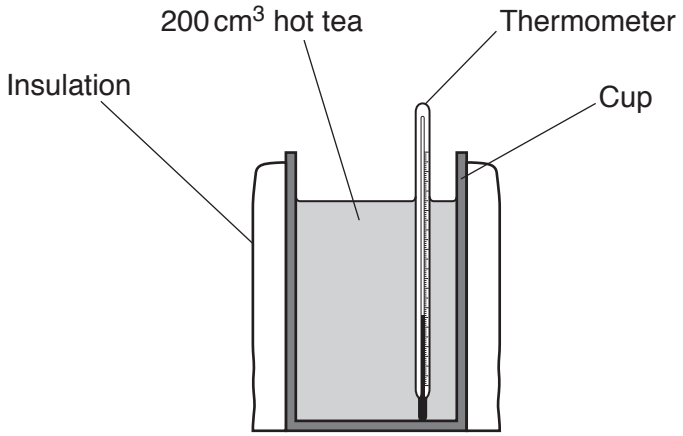

Fig. 16.1

The student wraps a layer of insulation around a cup containing 200 cm^3 of hot tea.

She measures the temperature of the tea at the start of the experiment and after 10 minutes.

She repeats the experiment with different thicknesses of the insulation.

Table 16.1 shows her results.

Thickness of the insulation (mm)	Temperature of tea (°C)		
	Start	**End**	**Difference**
2	90	65	25
4	88	66	22
6	91	72	19
8	89	73	16
10	98	84	14
12	100	60	

Table 16.1

(a) **(i)** Calculate the temperature **difference** when the thickness of insulation is 12 mm.

Temperature difference = ...°C **[1]**

© OCR 2019

(ii) The result when the thickness of the insulation is 12 mm is anomalous.

Suggest a reason why this result appears to be anomalous.

.....

..... **[1]**

(b) Plot a graph of the results in **Table 16.1** and draw a line of best fit.

Ignore the anomalous result for 12 mm.

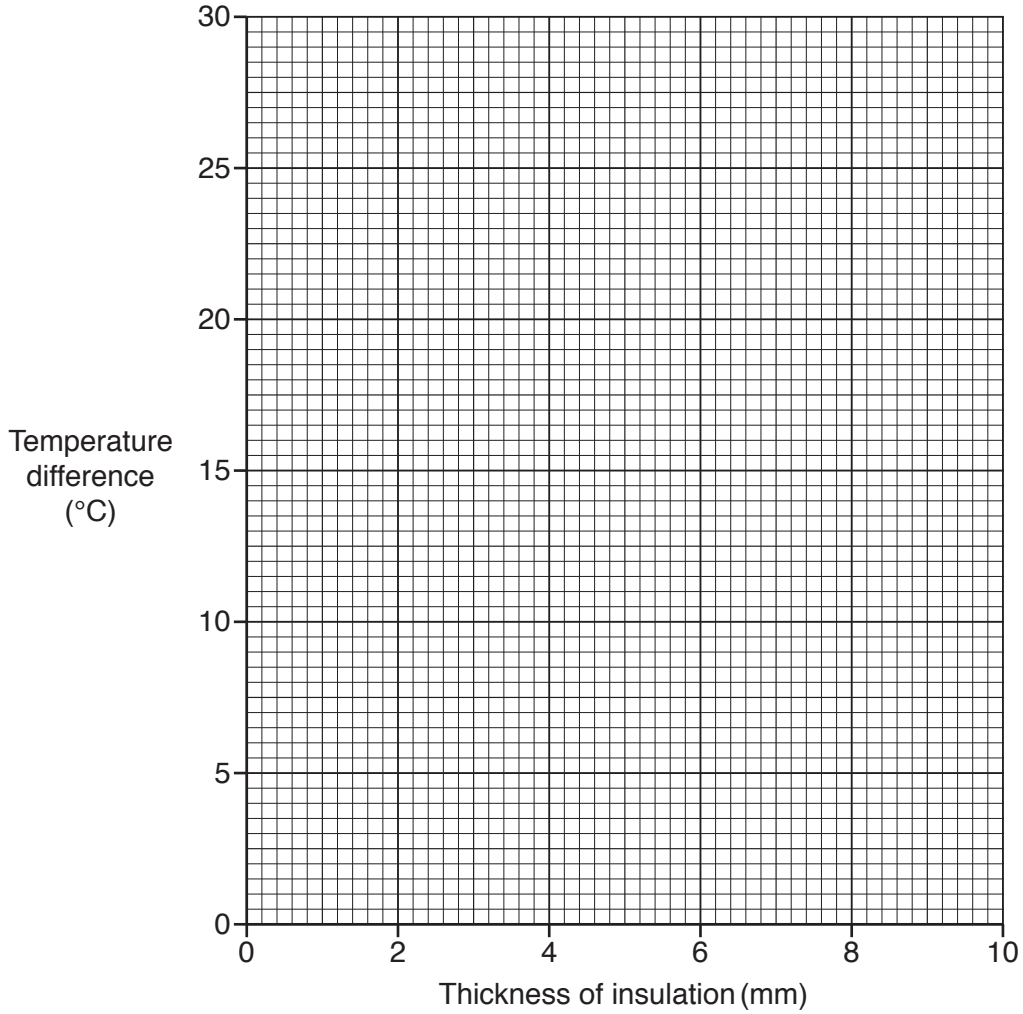

[2]

(c) Describe how the temperature difference is affected as the thickness of the insulation increases.

.....

..... **[1]**

(d) Suggest how the thickness of the insulation affects the rate of cooling of the tea.

.....

..... **[1]**

© OCR 2019

(e) This experiment could be improved.

Describe two **different** ways of improving the experiment.

1 .....

.....

2 .....

.....

[2]

© OCR 2019

BLANK PAGE

PLEASE DO NOT WRITE ON THIS PAGE

© OCR 2019

17 A student wants to investigate how a ball bounces.

He drops the ball from different heights and measures the bounce height each time.

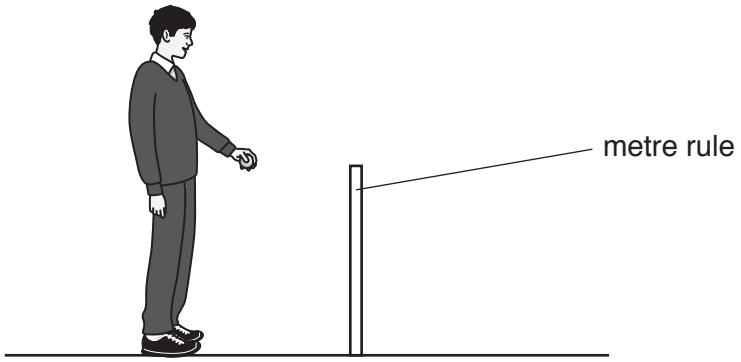

He calculates the ratio bounce height / drop height.

The table shows his results.

Drop height (cm)	Bounce height (cm)	Bounce height / drop height
100	70	0.70
80	64	0.80
60	54	0.90
40	40	1.00
20		

(a) The student predicts the ratio bounce height / drop height to be 1:1 when the drop height is 20 cm.

(i) Suggest why he has made this prediction.

.....

..... **[1]**

(ii) Use ideas about energy to explain why this prediction cannot be correct.

.....

..... **[1]**

© OCR 2019

(b) Suggest **two** improvements to his experiment.

1 .....

.....

.....

2 .....

.....

.....
[2]

(c) The mass of the ball is 60 grams.

(i) Calculate the mass of the ball in kg.

Mass = ... kg **[1]**

(ii) Calculate the potential energy of the ball when it is 0.80 m above the ground.

Use your answer to **(c)(i)** and the equation:
potential energy = mass × height × gravitational field strength

Gravitational field strength = 10 N / kg

Potential energy = ... J **[2]**

© OCR 2019

18 **(a)** Lenses can be used to help people see clearly.

Fig. 18.1 is a diagram of a convex lens.

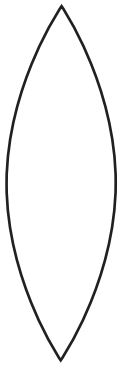

Fig. 18.1

(i) A student models the lens using two glass **prisms** and a glass **block**.

Complete the ray diagram **Fig. 18.2** to show how light rays travel through the model lens (glass prism and glass block).

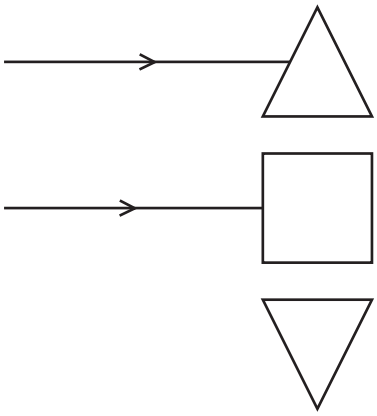

Fig. 18.2

[2]

(ii) Explain how a convex lens can correct long-sighted vision.

Use the model in **Fig. 18.2** to help you.

.....

.....

.....

..... **[2]**

© OCR 2019

(b) A student looks at coloured paper in different coloured light.

Fig. 18.3 is a diagram of her experiment.

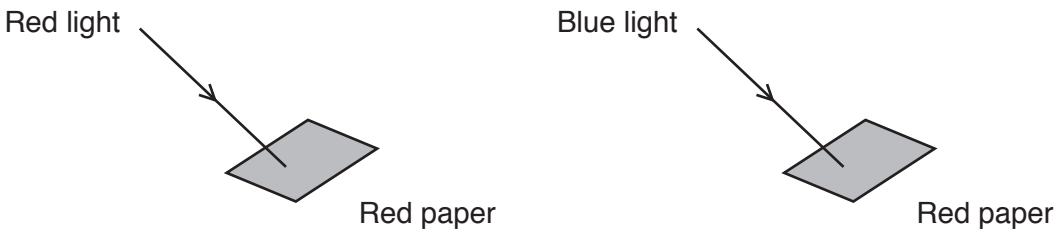

Fig. 18.3

She looks at red paper with red light. The paper appears red.

What colour does the red paper appear in blue light?

Explain your answer.

.....

.....

..... **[2]**

© OCR 2019

19 A student looks at two identical metal spoons, **A** and **B**.

Spoon **A** was placed in hot water at 70 °C.

Spoon **B** is at 20 °C.

(a) Which spoon emits the most radiation?

Tick (✓) **one** box.

Spoon **A** ☐

Spoon **B** ☐

Explain your answer.

.....

..... **[1]**

(b) Explain why both spoons look identical to the student, even though they are at different temperatures.

.....

.....

..... **[1]**

© OCR 2019

BLANK PAGE

PLEASE DO NOT WRITE ON THIS PAGE

© OCR 2019

20 **(a)** **Fig. 20.1** is a graph of a wave.

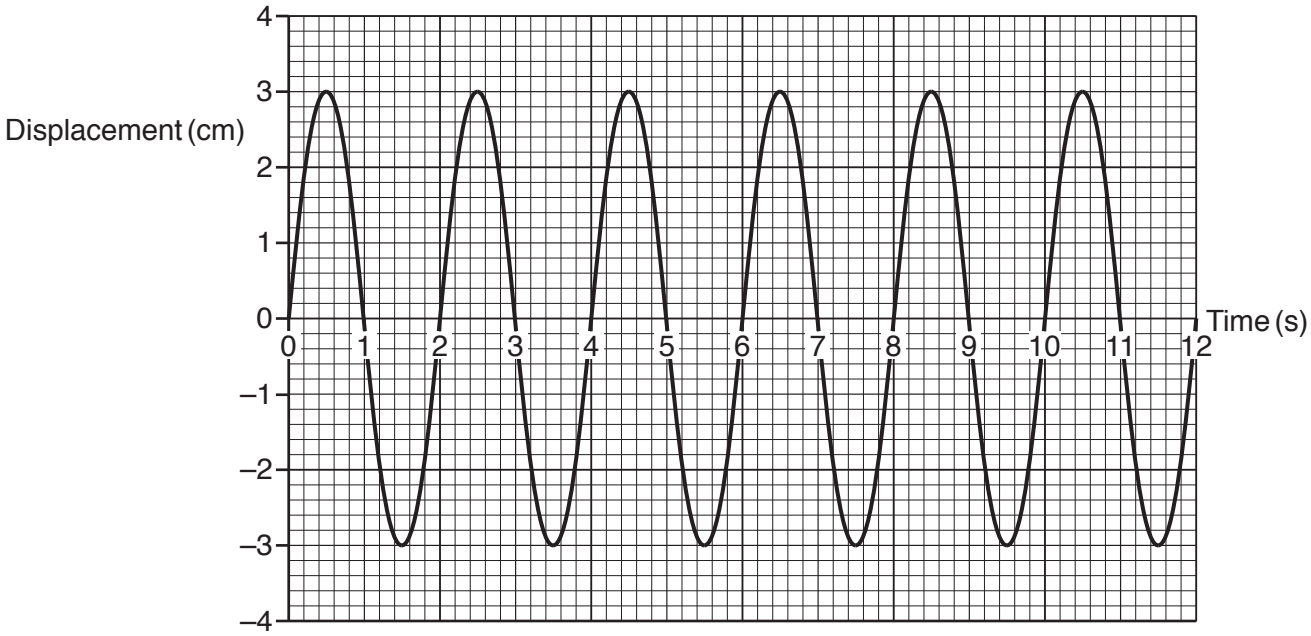

Fig. 20.1

(i) Use the graph in **Fig. 20.1** to work out the time period of the wave.

Time period of the wave = ... s **[1]**

(ii) Use the graph in **Fig. 20.1** to work out the amplitude of the wave.

Amplitude = ... cm **[1]**

(iii) The frequency of the wave in **Fig. 20.1** is 0.5 Hz.

What is meant by the term **frequency**?

.....

..... **[1]**

(b) A water wave has a frequency of 0.25 Hz and a wavelength of 6.0 m.

Calculate the speed of the wave.

Speed of the wave = ... m/s **[3]**

© OCR 2019

(c) Surface water waves can be modelled using a slinky spring.

A student holds one end of the spring on a table. The other end is fixed to a wall.

Fig. 20.2 shows the spring **viewed from above the table**.

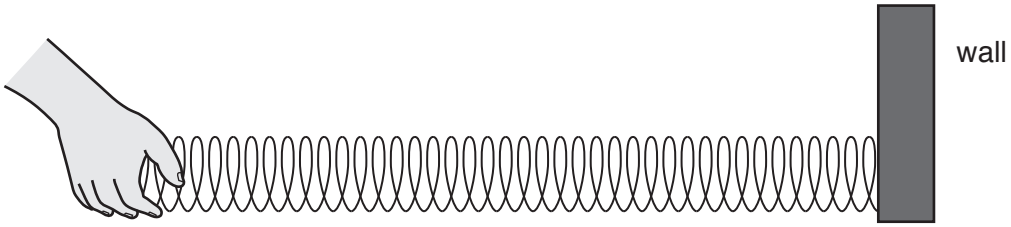

Fig. 20.2

(i) Draw two arrows **on the diagram** in **Fig. 20.2** to show the movement of the student's hand when he makes a transverse wave. **[1]**

(ii) Describe what happens to the **transverse** wave at the wall.

.....

.....

..... **[1]**

(iii) In **Fig. 20.3** the student stops moving his hand.

This is what the coils in the spring look like after a short time:

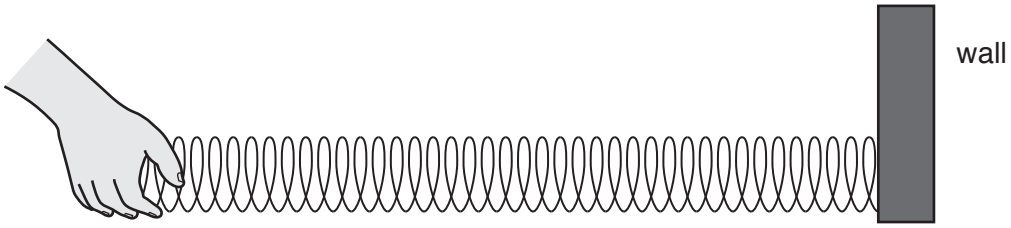

Fig. 20.3

This model of a water wave shows that the wave travels **not** the water.

Explain why.

.....

.....

..... **[1]**

© OCR 2019

21* A student does an experiment using 0.2 kg of water.

Here is some information from the experiment:

The aim is to find the energy needed to raise the temperature of the water by 20 °C. An electrical heater is used to heat the water. The temperature of the water increases by 20 °C. The **specific heat capacity** of water is 4 200 J / kg °C.

Describe how the student should carry out the experiment, including the equipment used.

In your answer calculate the change in internal energy for the water.

You may include a diagram in your answer.

.....

.....

.....

.....

.....

.....

.....

.....

.....

.....

..... **[6]**

© OCR 2019

22 Atoms can absorb and emit electromagnetic radiation.

(a) Describe **two** possible effects on an electron in an atom when it absorbs electromagnetic radiation.

1 .....

.....

2 .....

.....
[2]

(b) Alpha radiation is **not** emitted in the processes in part **(a)**.

Explain why.

.....

.....

..... **[2]**

© OCR 2019

23 **(a)** A radioactive isotope has a half-life of 6 hours.

50 g of the isotope are put in a container.

What mass of the isotope is left after 6 hours?

Mass = ... g **[1]**

(b) This is a graph showing the radiation emitted from samples of three different isotopes **A**, **B** and **C**.

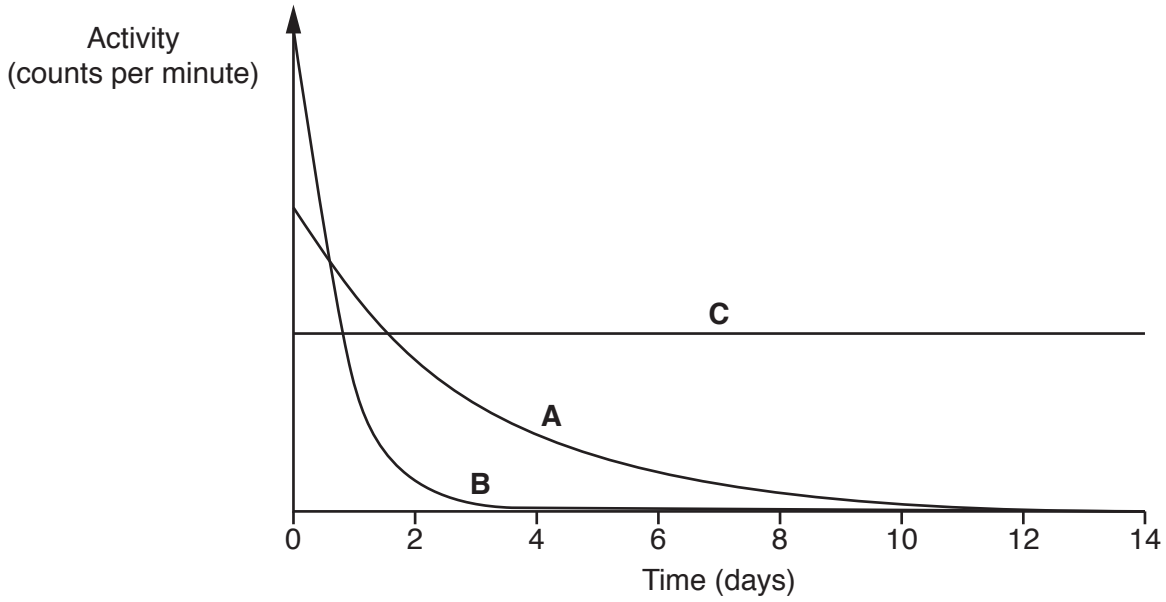

(i) Which isotope, **A**, **B** or **C**, takes the longest time to decay? **[1]**

Tick (✓) **one** box.

A ☐

B ☐

C ☐

© OCR 2019

(ii) Two scientists discuss the isotopes in the graph.

Scientist 1	Scientist 2
'I think isotope **A** is more hazardous than **B**. **A** has a higher activity than **B**.'	'I think isotope **B** is more hazardous than **A**. **B** has a longer half-life than **A**.'

Do you agree with the views of scientist 1 and scientist 2?

Use the graph and ideas about radioactivity and half-life to explain your answer.

Scientist 1 .....

.....

.....

.....

Scientist 2 .....

.....

.....

.....

[4]

© OCR 2019

(iii) **Scientist 1** wants to identify the type of radiation emitted by isotope **A**.

This is a list of equipment **Scientist 1** has in his laboratory:

- radiation detector
- piece of thick lead
- piece of cardboard
- piece of aluminium.

Describe how **Scientist 1** does the experiment and explain how they can work out the type of radiation emitted.

You may include a diagram in your answer.

.....

.....

.....

.....

.....

.....

.....

..... **[4]**

© OCR 2019

(c) This is a diagram to show a nuclear fusion reaction:

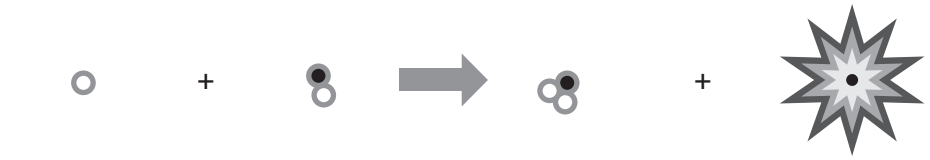

hydrogen-1 + hydrogen-2 → helium-3 + energy

(i) Explain why this is nuclear fusion.

.....

..... **[1]**

(ii) It is difficult for nuclear fusion reactions to occur on Earth.

Explain why nuclear fusion reactions occur in the Sun.

.....

.....

..... **[2]**

(iii) What will happen to our Sun when it runs out of hydrogen?

.....

..... **[1]**

(d) Some scientists say nuclear fission is renewable. Other scientists say it is non-renewable.

Suggest why the scientists disagree.

.....

.....

..... **[1]**

© OCR 2019

BLANK PAGE

PLEASE DO NOT WRITE ON THIS PAGE

© OCR 2019

24 **(a)** A TV has a power rating of 0.2 kW.

Calculate the energy transferred, in kWh, if the TV is switched on for 4 hours.

Energy transferred = ... kWh **[3]**

(b) A different TV works with a 12.0 V battery. It has a current of 3.19 A.

Calculate the power rating of the TV.

Power = ... W **[3]**

© OCR 2019

25 The graph shows thinking and braking distances for a car at different speeds.

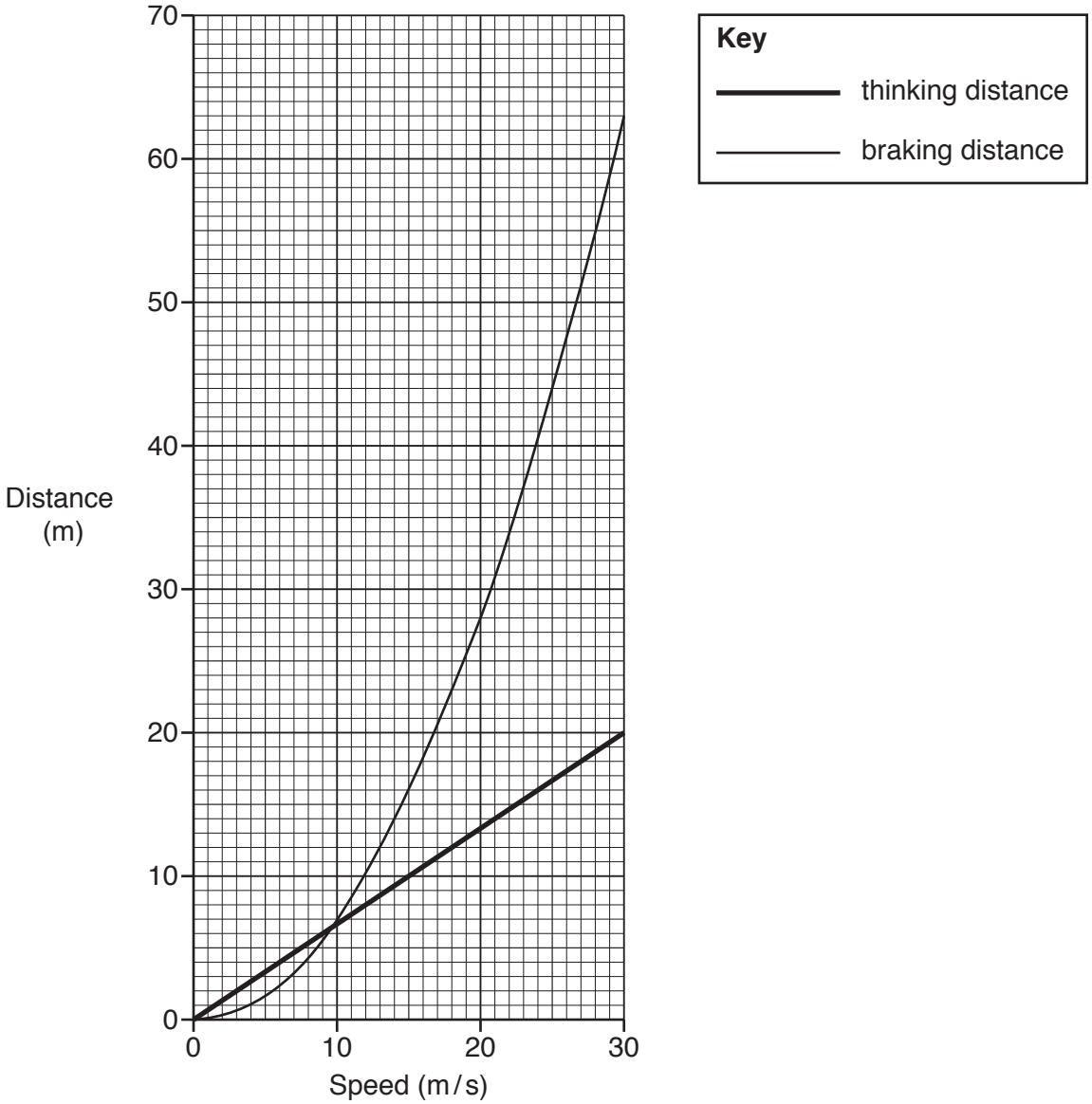

(a) Describe how **thinking distance** varies with increasing speed.

Use data from the graph in your answer.

.....

.....

.....

..... **[2]**

© OCR 2019

(b) **(i)** Use the graph to find the **thinking distance** at 24 m/s.

Thinking distance = ... m **[1]**

(ii) Calculate the **thinking time** at 24 m/s.

Use your answer to **(b)(i)** and the equation: distance travelled = speed × time

Give your answer to **2** decimal places.

Thinking time = ... s **[3]**

(c) **(i)** State **one** factor that could **increase** thinking distance.

..... **[1]**

(ii) Calculate the **stopping distance** at 15 m/s.

Use the graph to help you.

Stopping distance = ... m **[2]**

(d) How does the speed affect the **kinetic energy** and **braking distance** of the car?

Use the graph in your answer.

.....

.....

.....

.....

..... **[3]**

END OF QUESTION PAPER

© OCR 2019

ADDITIONAL ANSWER SPACE

If additional space is required, you should use the following lined page(s). The question number(s) must be clearly shown in the margin(s).

OCR
Oxford Cambridge and RSA

Copyright Information

OCR is committed to seeking permission to reproduce all third-party content that it uses in its assessment materials. OCR has attempted to identify and contact all copyright holders whose work is used in this paper. To avoid the issue of disclosure of answer-related information to candidates, all copyright acknowledgements are reproduced in the OCR Copyright Acknowledgements Booklet. This is produced for each series of examinations and is freely available to download from our public website (www.ocr.org.uk) after the live examination series.

If OCR has unwittingly failed to correctly acknowledge or clear any third-party content in this assessment material, OCR will be happy to correct its mistake at the earliest possible opportunity.

For queries or further information please contact The OCR Copyright Team, The Triangle Building, Shaftesbury Road, Cambridge CB2 8EA.

OCR is part of the Cambridge Assessment Group; Cambridge Assessment is the brand name of University of Cambridge Local Examinations Syndicate (UCLES), which is itself a department of the University of Cambridge.

© OCR 2019