OCR
Oxford Cambridge and RSA

F

GCSE (9–1) Physics A (Gateway Science)

J249/01 Paper 1, P1 – P4 and P9 (Foundation Tier)

Wednesday 23 May 2018 – Afternoon

Time allowed: 1 hour 45 minutes

You must have:
- a ruler (cm/mm)
- the Data Sheet (for GCSE Physics A (inserted))

You may use:
- a scientific or graphical calculator
- an HB pencil

First name	
Last name	

Centre number						Candidate number				

INSTRUCTIONS
- The Data Sheet will be found inside this document.
- Use black ink. You may use an HB pencil for graphs and diagrams.
- Complete the boxes above with your name, centre number and candidate number.
- Answer **all** the questions.
- Write your answer to each question in the space provided. If additional space is required, use the lined page(s) at the end of this booklet. The question number(s) must be clearly shown.
- Do **not** write in the barcodes.

INFORMATION
- The total mark for this paper is **90**.
- The marks for each question are shown in brackets **[ ]**.
- Quality of extended responses will be assessed in the questions marked with an asterisk (*).
- This document consists of **28** pages.

© OCR 2018 [601/8651/3]
DC (ST/SG) 152878/7
OCR is an exempt Charity

SECTION A

Answer **all** the questions.

You should spend a maximum of 30 minutes on this section.

1 What is the gravitational field strength at the Earth's surface?

A 10 N/kg

B 16 N/kg

C 50 N/kg

D 230 N/kg

Your answer ☐ **[1]**

2 Which voltage is the maximum voltage made when **four** 1.5 V cells are connected in **series**?

A 0 V

B 1.5 V

C 3.0 V

D 6.0 V

Your answer ☐ **[1]**

3 Cog **X** has 16 teeth and cog **Y** has 8 teeth.

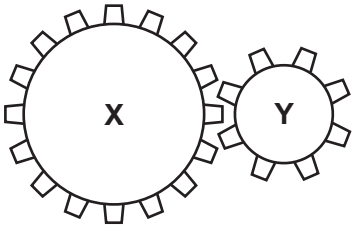

Cog **X** is turned around **two** times.

How many times does cog **Y** turn around?

A 1

B 2

C 4

D 8

Your answer ☐ **[1]**

© OCR 2018

4 What is the **smallest** number of forces needed to bend an object?

A 1

B 2

C 3

D 4

Your answer ☐ **[1]**

5 The diagram shows the relationship between force and extension for a spring.

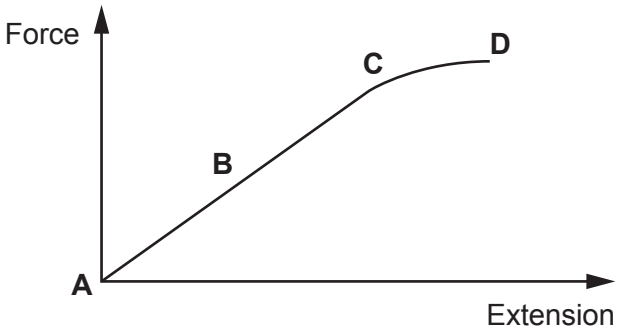

Which letter on the graph shows the **elastic limit** of the spring being stretched?

Your answer ☐ **[1]**

6 This is a circuit.

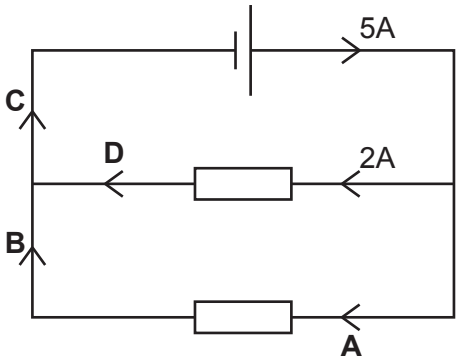

Which letter **A**, **B**, **C** or **D** shows the part of the circuit that carries a current of 2A?

Your answer ☐ **[1]**

© OCR 2018

7 A student has 3 identical resistors. She arranges them in four different ways.

A

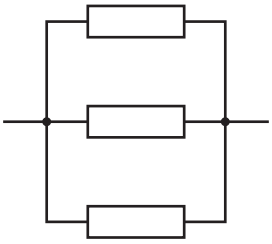

B

C

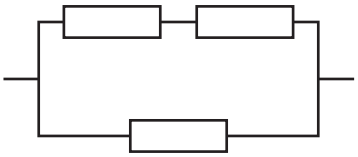

D

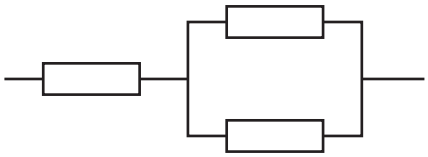

Which arrangement has the **most** resistance?

Your answer ☐ **[1]**

8 An object travelled 800 m in 40 seconds.

Use the equation: distance travelled (m) = speed (m/s) × time (s)

What is the speed of the object?

A 0.05 m/s

B 20 m/s

C 840 m/s

D 32 000 m/s

Your answer ☐ **[1]**

© OCR 2018

9 An object moved 20 cm with a force of 20 N.

Use the equation: work done = force × distance

Which is the correct calculation of work done?

A 0.4 J

B 4.0 J

C 40 J

D 400 J

Your answer ☐ **[1]**

10 In which situation does the force cause a rotation?

A Bouncing on a trampoline

B Hitting a nail with a hammer

C Pushing a friend on a swing

D Sitting on a chair

Your answer ☐ **[1]**

11 Which is a scalar?

A Acceleration

B Displacement

C Force

D Speed

Your answer ☐ **[1]**

© OCR 2018

12 These statements are about pressure and volume of a gas.

Which statement is correct?

A Volume doubles, pressure doubles

B Volume doubles, pressure halves

C Volume halves, pressure halves

D Volume halves, pressure stays constant

Your answer ☐ **[1]**

13 Which of the following has the **most** kinetic energy?

A

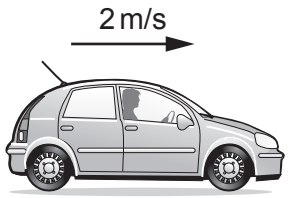

500 kg

B

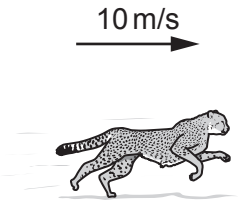

80 kg

C

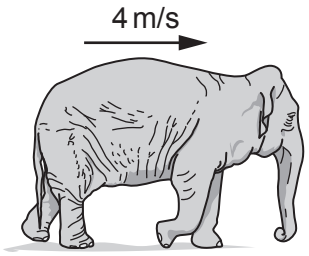

3000 kg

D

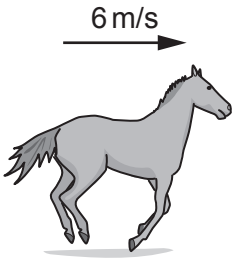

750 kg

Your answer ☐ **[1]**

© OCR 2018

14 Which distances are the **same**?

A 1×10^{-3} m and 1 μm

B 1×10^{-6} m and 1 mm

C 1×10^{-9} m and 1 nm

D 1×10^{-12} m and 1 Gm

Your answer ☐ **[1]**

15 A student studies how the temperature falls when a liquid cools.

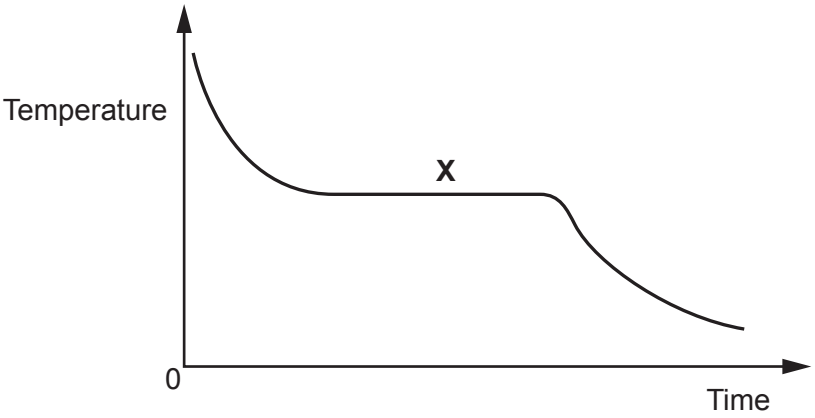

What is happening at point **X** on the graph?

A Boiling

B Freezing

C Melting

D Subliming

Your answer ☐ **[1]**

© OCR 2018

SECTION B

Answer **all** the questions.

16 A student uses four electrical appliances for different lengths of time.

Look at the table.

Appliance	Power (W)	Time used (hours)
Hair dryer	1500	0.3
TV	100	5
Toaster	2000	0.2
Light bulb	10	12

(a) **(i)** Which appliance uses the **most** energy?

..... **[1]**

(ii) Which appliance uses the **least** energy?

..... **[1]**

(b) Here are three different components and their use in the home.

Match the component to its correct use.

One has been done for you.

Component	Use
LDR	Operating a heating system
Thermistor	Monitoring the position of a door
Variable resistor	Turning on lights when it gets dark

[2]

© OCR 2018

(c) A charge of 44 000 C flows through a light bulb. The potential difference is 230 V.

Calculate the energy transferred.

Use the equation: Charge = Energy ÷ Potential difference

Record your answer to **2** significant figures.

Answer = ... C **[4]**

(d) **(i)** A student has completed her homework on static electricity.

Look at her homework.

1 Static charge only builds up on insulators.
2 Opposite charges attract.
3 Like charges repel.
4 Only positive charges can move.

Identify the student's mistake and correct it.

.....

.....

.....

..... **[2]**

© OCR 2018

(ii) When charges move, a current flows.

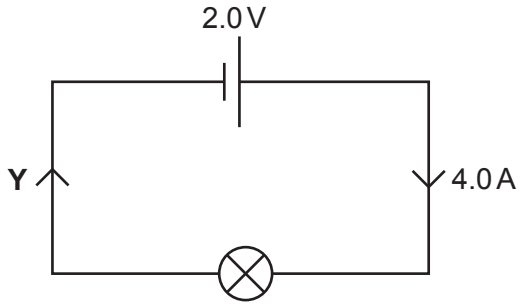

Write down the current flowing at point **Y** in the circuit.

Answer = ... A **[1]**

© OCR 2018

17 Atomic models have changed over time.

Old atomic model – Atoms are a positive mass with negative electrons fixed in it.

Current atomic model – Atoms are made from protons, neutrons and electrons. Protons and neutrons are in a central nucleus surrounded by a cloud of electrons.

(a) **(i)** Write down **two** differences between these models.

1 .....

.....

2 .....

..... **[2]**

(ii) Why did the atomic model change?

.....

.....

..... **[2]**

© OCR 2018

(b) A student has data on four blocks of different materials.

Each block has the **same** volume.

Block	Mass (kg)	Density (kg/m^3)
A	2	2000
B	4	4000
C	6	6000
D	8	8000

(i) Plot this data onto the graph and draw a line of best fit.

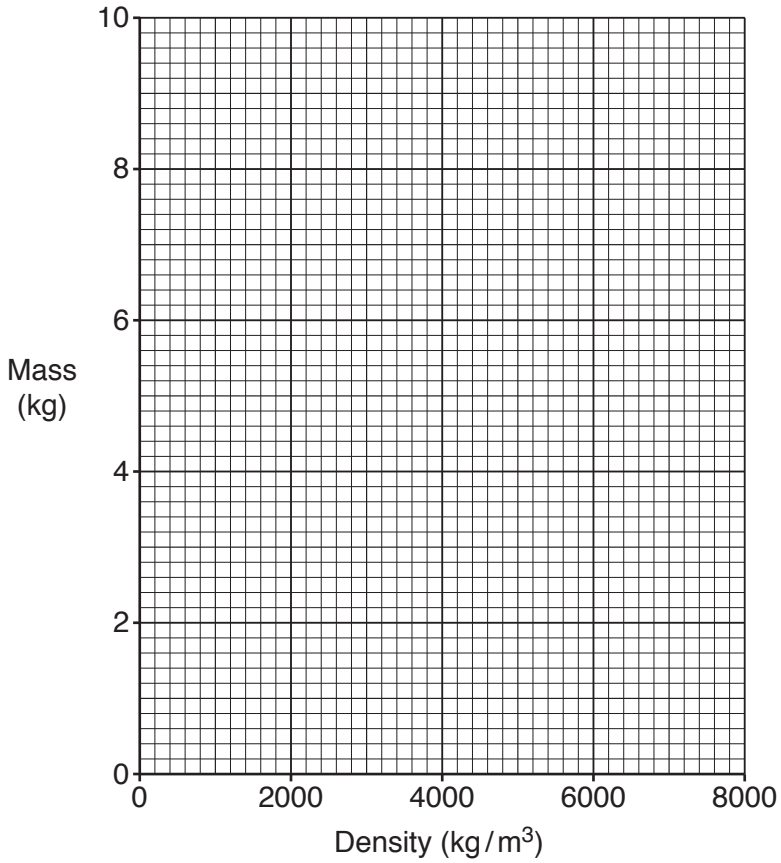

[2]

(ii) Describe the pattern shown on the graph.

.....

.....

..... **[2]**

© OCR 2018

BLANK PAGE

© OCR 2018

18 A student completes an experiment to find the specific heat capacity of water.

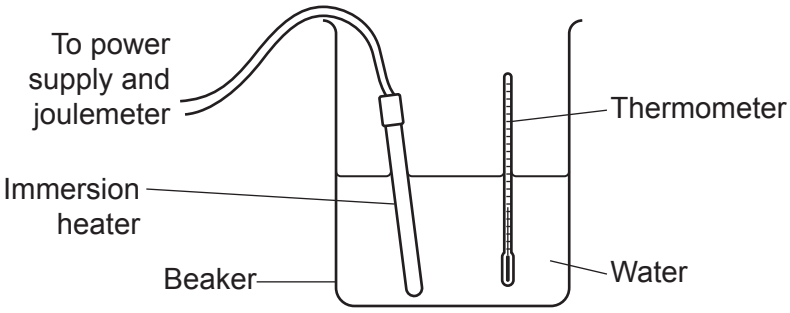

He heats up 1 kg of water, using an immersion heater. He measures the temperature rise and calculates the specific heat capacity of the water.

Attempt	Energy supplied (J)	Temperature rise (°C)	Specific heat capacity (J/kg °C)
1	10 000	2	5000
2	21 000	4	5250
3	44 000	8	5500

(a) **(i)** Calculate the **mean** specific heat capacity.

Answer = ... J/kg °C **[1]**

(ii) Describe the conclusions that can be drawn from the data.

.....

.....

.....

..... **[3]**

© OCR 2018

(b) The actual value for the specific heat capacity of water is 4200 J/kg °C.

(i) Explain why the mean specific heat capacity calculated in **(a)(i)** is higher than the actual value.

.....

.....

..... **[2]**

(ii) Write down **two** problems with this experiment **and** suggest how they could be solved.

Use the diagram and results table to help you.

Problem 1 .....

.....

Solution .....

.....

Problem 2 .....

.....

Solution .....

.....

[4]

© OCR 2018

19* Four students run in different races.

Student	Race distance (m)	Time (s)
A	50	6
B	100	15
C	100	14
D	200	31

Use the information in the table to **describe** and **compare** the motion of the four students.

Use the data in your answer.

.....

.....

.....

.....

.....

.....

.....

.....

.....

.....

.....

..... **[6]**

© OCR 2018

20 **(a)** Objects can interact in many ways. Pairs of forces arise when objects interact.

Write down **one** type of force involved when objects interact.

.....

..... **[1]**

(b) A book rests on a table.

Draw a free body force diagram to show the forces acting on the book.

Use arrows to represent the forces.

[4]

(c) A teacher uses an air-track for motion experiments. Using the air-track means that there is no friction between the glider and the air-track.

The teacher places the glider on the horizontal air-track and gives it a small push to start it moving.

Explain the motion of the glider.

.....

.....

..... **[2]**

© OCR 2018

(d) A presenter on a car TV programme says:

"The car maker has reduced the mass of this car and it now has better acceleration."

(i) Explain why the presenter is correct.

.....

.....

..... **[2]**

(ii) A car accelerates from 5 m/s to 25 m/s in 4 seconds.

Calculate the acceleration of the car.

Use the equation: Acceleration = Change in speed ÷ Time taken

Answer = ... m/s^2 **[3]**

© OCR 2018

21 Two children play on a seesaw.

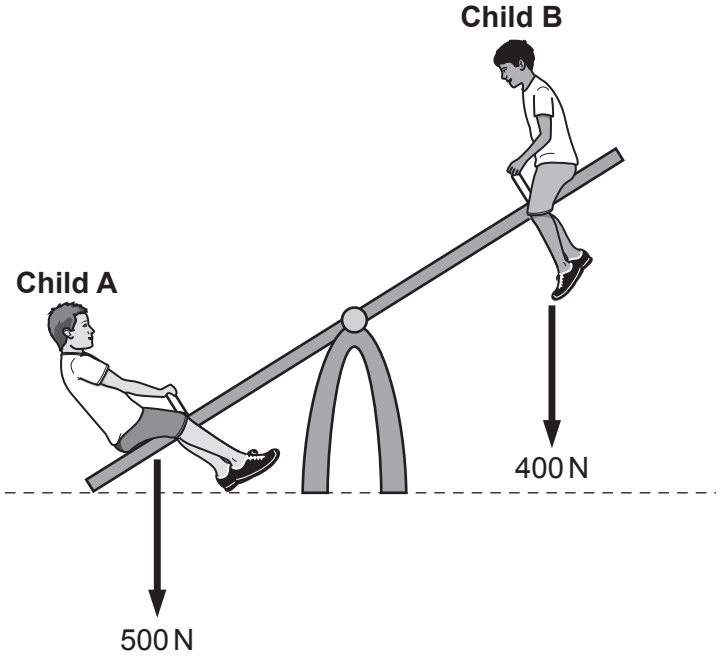

Both children sit **2 m** from the pivot.

(a) **(i)** Calculate the clockwise and anti-clockwise moments around the pivot when the seesaw is horizontal.

Clockwise moment = ... Nm

Anti-clockwise moment = ... Nm
[3]

(ii) Calculate where **Child A** should sit to balance the seesaw.

Answer = ... **[3]**

© OCR 2018

(b) A student tries to compress the fluid in a sealed syringe with a force of 10 N.

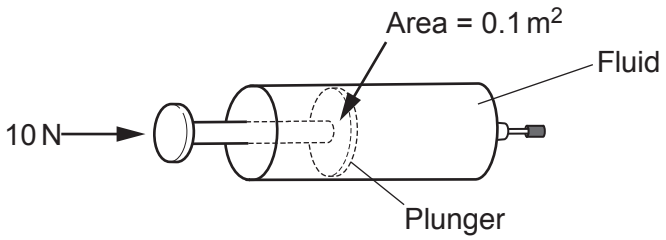

The area of the end of the syringe is 0.1 m^2.

(i) Calculate the pressure in the fluid.

Answer = ... Pa **[3]**

(ii) Write down the direction of the force produced by the fluid on the plunger.

..... **[1]**

© OCR 2018

BLANK PAGE

© OCR 2018

22 A student builds a circuit to investigate the resistance of component **X**.

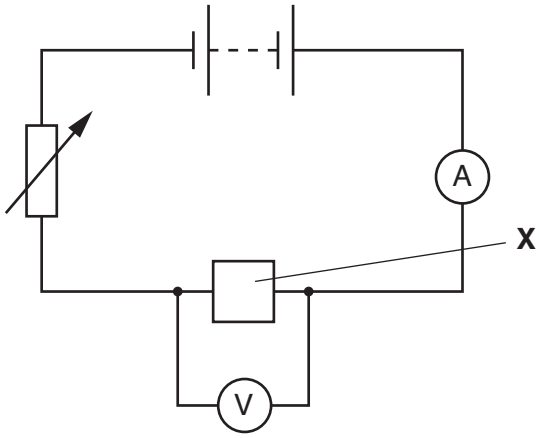

(a) **(i)** What is the name of this component? 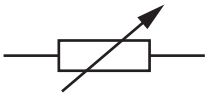

..... **[1]**

(ii) Why is this component needed in this circuit?

..... **[1]**

(b) The student uses the circuit to take current and potential difference readings.

The student plots a graph of her results.

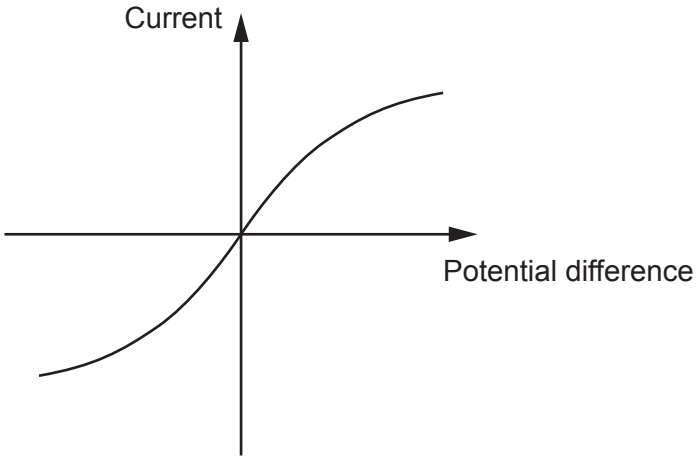

(i) Look at the graph.

What is component **X** in the circuit?

..... **[1]**

© OCR 2018

(ii) The resistance of component **X** varies as the potential difference changes.

Describe **how** the graph shows this and explain **why** this happens.

.....

.....

.....

..... **[3]**

(c) Component **X** has a resistance of 16 Ω when a current of 0.25 A flows.

(i) Calculate the potential difference across component **X**.

Use the equation: Potential difference = Current × Resistance

Answer = ... V **[2]**

(ii) Calculate the power of component **X** when a current of 0.25 A flows.

Answer = ... W **[3]**

© OCR 2018

23 A student sets up an experiment to investigate the magnetic field around a current-carrying wire.

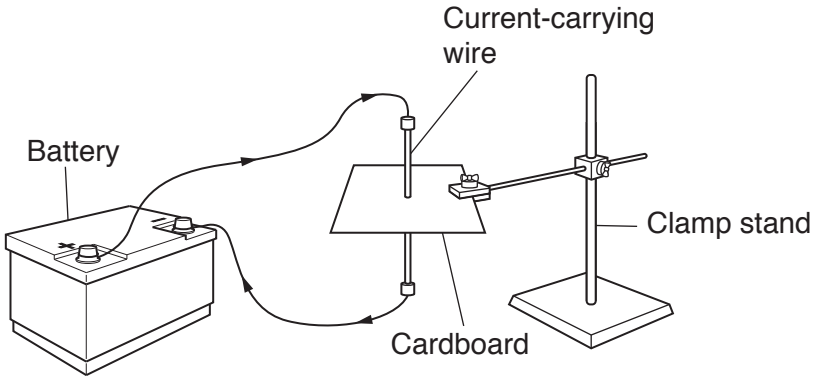

(a) **(i)** Describe how the student could use this experiment and a compass to investigate the magnetic field produced by the wire.

.....

.....

.....

.....

.....

..... **[3]**

(ii) Draw the shape of the field which would be found around **this** wire.

[2]

(b) The behaviour of a magnetic compass is evidence that the core of the Earth is magnetic. Explain why.

.....

.....

.....

..... **[2]**

END OF QUESTION PAPER

© OCR 2018

ADDITIONAL ANSWER SPACE

If additional space is required, you should use the following lined page(s). The question number(s) must be clearly shown in the margin(s).

© OCR 2018

© OCR 2018

© OCR 2018

OCR
Oxford Cambridge and RSA

Copyright Information

OCR is committed to seeking permission to reproduce all third-party content that it uses in its assessment materials. OCR has attempted to identify and contact all copyright holders whose work is used in this paper. To avoid the issue of disclosure of answer-related information to candidates, all copyright acknowledgements are reproduced in the OCR Copyright Acknowledgements Booklet. This is produced for each series of examinations and is freely available to download from our public website (www.ocr.org.uk) after the live examination series.

If OCR has unwittingly failed to correctly acknowledge or clear any third-party content in this assessment material, OCR will be happy to correct its mistake at the earliest possible opportunity.

For queries or further information please contact the Copyright Team, First Floor, 9 Hills Road, Cambridge CB2 1GE.

OCR is part of the Cambridge Assessment Group; Cambridge Assessment is the brand name of University of Cambridge Local Examinations Syndicate (UCLES), which is itself a department of the University of Cambridge.

© OCR 2018