Oxford Cambridge and RSA

Thursday 14 October 2021 – Morning

AS Level Physics B (Advancing Physics)

H157/02 Physics in depth

Time allowed: 1 hour 30 minutes

You must have:
- the Data, Formulae and Relationships Booklet

You can use:
- a scientific or graphical calculator
- a ruler (cm/mm)

Please write clearly in black ink. **Do not write in the barcodes.**

Centre number | | | | | | Candidate number | | | | |

First name(s) _____

Last name _____

INSTRUCTIONS
- Use black ink. You can use an HB pencil, but only for graphs and diagrams.
- Write your answer to each question in the space provided. If you need extra space use the lined pages at the end of this booklet. The question numbers must be clearly shown.
- Answer **all** the questions.
- Where appropriate, your answer should be supported with working. Marks might be given for a correct method, even if your answer is wrong.

INFORMATION
- The total mark for this paper is **70**.
- The marks for each question are shown in brackets **[ ]**.
- Quality of extended response will be assessed in questions marked with an asterisk (*).
- This document has **20** pages.

ADVICE
- Read each question carefully before you start your answer.

© OCR 2021 [601/4744/1]
DC (PQ/JG) 301230/4
OCR is an exempt Charity

SECTION A

1 In an experiment to determine the electrical conductivity of a metal, the diameter d of a wire sample was measured eight times with a micrometer and the readings displayed on the dot-plot below.

		●						
		●	●					
●	●	●	●					●
0.26	0.27	0.28	0.29	0.30	0.31	0.32	0.33	0.34

d / mm

(a) Ignoring the value of 0.34 mm, obtain values for the diameter d and its uncertainty, Δd. Show your working and give both values to an appropriate number of significant figures.

d = ... mm Δd = ... mm **[4]**

(b) Explain why it is appropriate to treat the reading of 0.34 mm as an outlier and suggest how the anomalous reading may have been obtained.

.....

.....

.....

..... **[2]**

© OCR 2021

2 The diagram represents the process used to split calcium chloride into calcium metal and chlorine gas. The calcium chloride is heated until it melts, when the positive calcium ions and negative chloride ions become free to move. The p.d. from the battery makes the ions move towards the two electrodes.

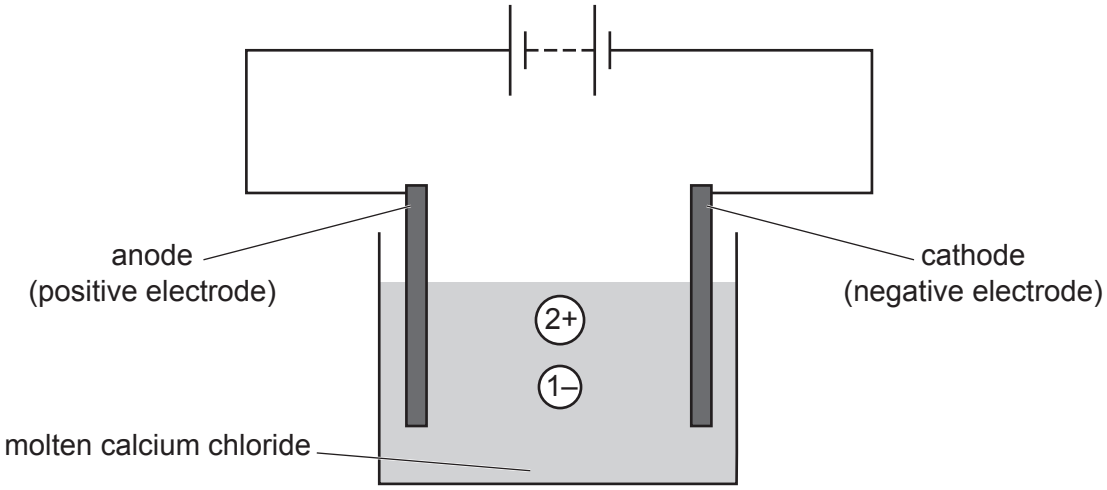

The two labelled circles represent a doubly-charged positive calcium ion and a slightly smaller, singly-charged negative chloride ion. The p.d. produced by the battery makes the charges move separately to the two electrodes.

(a) Explain why the charge received by the anode in a given time must have the same magnitude as the charge received by the cathode in that time.

.....

.....

..... **[2]**

(b) Draw an arrow **on each ion** to show the velocity of its movement.
Explain your choices of direction and size of the arrows.

.....

.....

.....

..... **[3]**

© OCR 2021

3 The graph shows how the extension produced in a strip of rubber varies as the force is first increased from O through point A to a maximum at point B, and then reduced through point C to zero force once more.

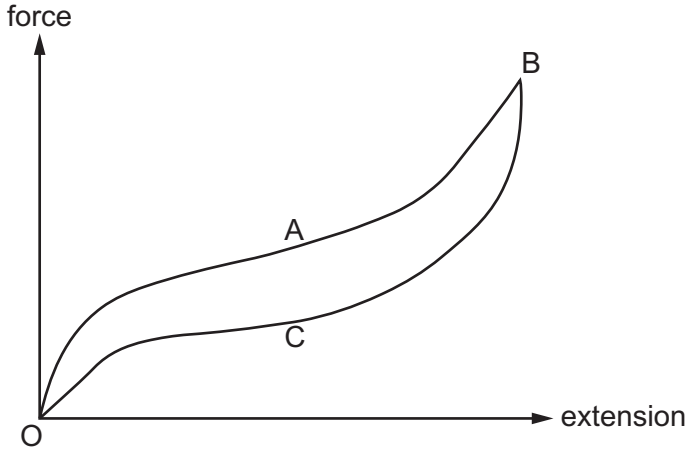

(a) Imagine that you produced the force by holding the ends of the rubber strip in each hand and pulling.

Describe what it would feel like as you pulled the band from O to A and then from A to B.

.....

.....

..... **[2]**

(b) The area between the section BCO and the extension axis is different from the area between the section OAB and the extension axis.

Explain in terms of energy why this is so.

.....

.....

..... **[2]**

4 A 230 V electric kettle has a power of 2.0 kW and a resistance of 26 Ω.

The heating element contains coiled nichrome wire of total length 4.8 m. The electrical conductivity of nichrome at the working temperature of the kettle is $9.4 \times 10^5\,\mathrm{S\,m^{-1}}$.

Calculate the cross-sectional area of the nichrome wire.

area = ... m^2 **[3]**

© OCR 2021

5 The diagram shows an electron in an atom moving between two energy levels, causing a photon to be emitted. The energies of the two levels, measured relative to the lowest energy level in the atom, are shown.

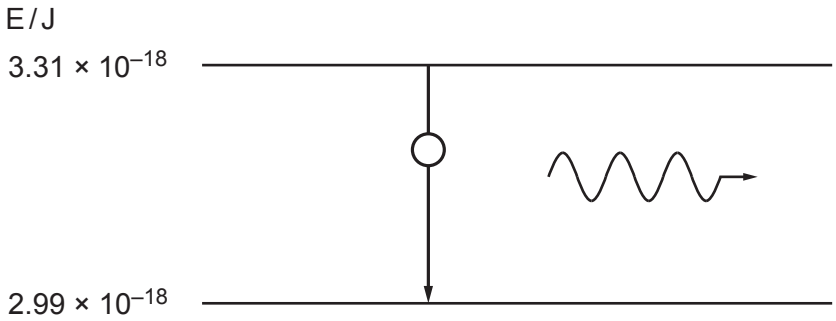

This photon is emitted by a laser which emits 3.4×10^{17} identical photons each second.

(a) Calculate the output power of the laser beam.

power = ... W **[1]**

(b) Calculate the wavelength of the emitted photon.

wavelength = ... m **[2]**

(c) The laser beam strikes a black surface, and all the photons are absorbed.

Calculate the force produced on the surface.

force = ... N **[2]**

© OCR 2021

SECTION B

6 This question is about the motion of a spacecraft taking off from the surface of the Moon.

(a) **Fig. 6.1** shows a lunar module leaving the Moon. The launch platform was used to land the lunar module on the Moon when it arrived.

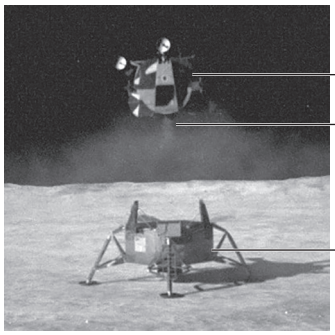

Fig. 6.1

(i) Use the data below to show that the downward thrust from the rocket at the moment of take-off is about 55 kN.

Initial acceleration of ascent stage = 2.1 m s^{-2}

Mass of lunar module including crew, equipment and fuel = 14 700 kg

On the Moon's surface, g = 1.62 N kg^{-1}

[3]

(ii) The lunar module was programmed to rise vertically for at least 10 m before changing direction, to make sure that it would be well clear of the launch platform.

Calculate the minimum time for this vertical rise.

time = ... s **[2]**

© OCR 2021

(iii) As the rocket fired, 15 kg per second of exhaust gases were ejected each second.

Use the answer to **(i)** to calculate the velocity of the exhaust gases leaving the rocket.

velocity = ... $m\,s^{-1}$ **[2]**

(b) **Fig. 6.2** shows the trajectory of the lunar module as it left the surface of the Moon.

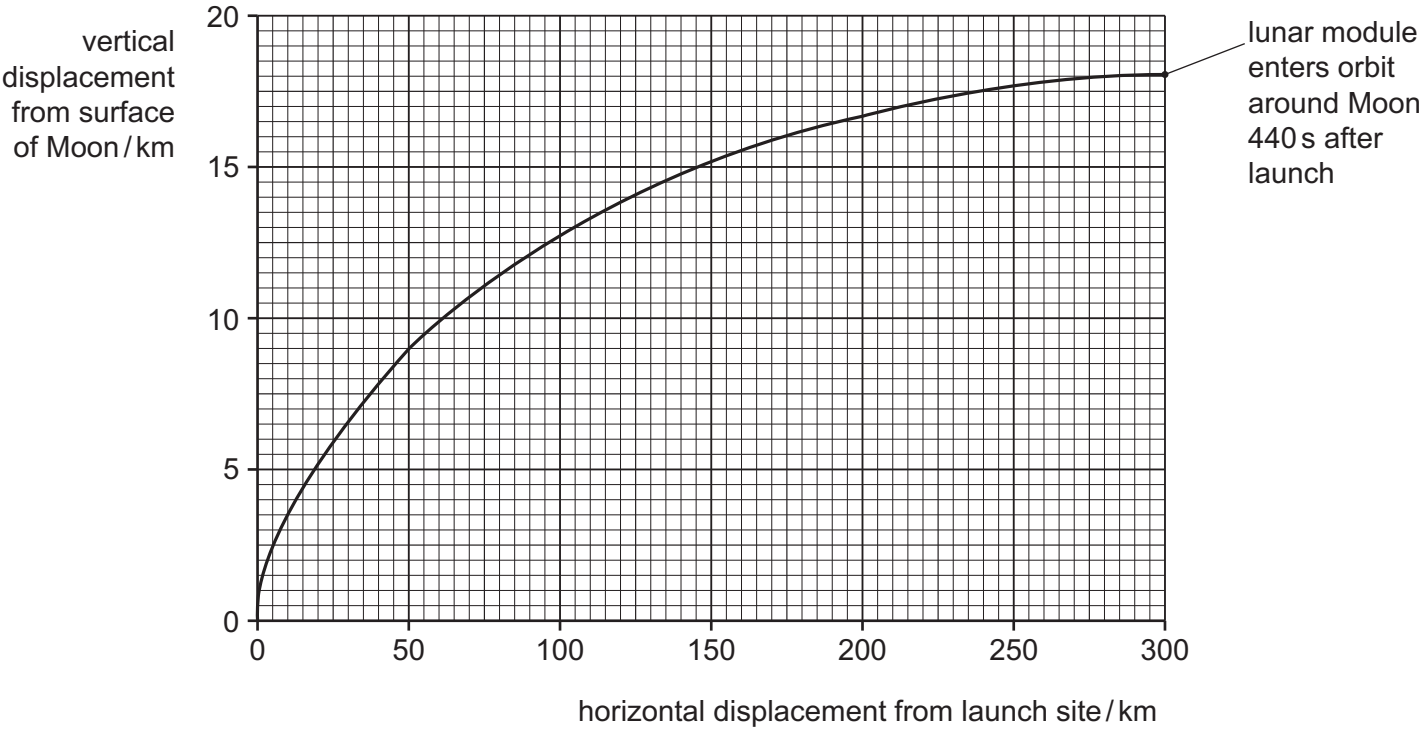

Fig. 6.2

Use data from **Fig. 6.2** to calculate an estimate of the mean speed of the lunar module during its flight from the Moon's surface until it entered orbit. Show your working clearly, stating any assumptions you make.

mean speed = ... $m\,s^{-1}$ **[2]**

© OCR 2021

(c) The vertical motion of the lunar module can be analysed by a computer model. In this model, the numbers used have been simplified.

(i) The process used is to calculate each value of v from the one before. The mass m and resultant force F are constant throughout giving constant acceleration $a = F/m$. The time between each row Δt is 2 s.

In row 1, $t = 0$ s, all variables have their starting values.

In row 2, $t = 2$ s, new v = previous v + previous $a \times \Delta t = 0 + 2\,\text{m s}^{-2} \times 2\,\text{s} = 4.0\,\text{m s}^{-1}$

Complete the table, showing the velocities at times $t = 4$ s and $t = 6$ s.

t/s	m/kg	F/N	a/m s^{-2}	v/m s^{-1}
0	1000	2000	2.0	0.0
2	1000	2000	2.0	4.0
4	1000	2000	2.0	
6	1000	2000	2.0	

Table 6.1

[1]

As the lunar module takes off, its mass becomes less as the fuel is burned. You can assume the force is constant.

(ii) If 50 kg of fuel is burnt each second, **Table 6.1** becomes as follows.

t/s	m/kg	F/N	a/m s^{-2}	v/m s^{-1}
0	1000	2000	2.0	0.0
2	900	2000		4.0
4	800	2000		
6	700	2000		

Table 6.2

Use the m and F values to calculate the values of a and insert them in **Table 6.2**. **[1]**

© OCR 2021

(iii) Calculate the values of v as in **(i)**, using each time the previous value of a, and insert them in **Table 6.2**.

The value for $t = 2$ s has been done as an example. **[2]**

(iv) Explain the effect of including the loss of mass in the calculations of velocity shown in **Table 6.1** and **Table 6.2** above.

.....

.....

..... **[2]**

© OCR 2021

7 This question is about electric vehicles (EVs).

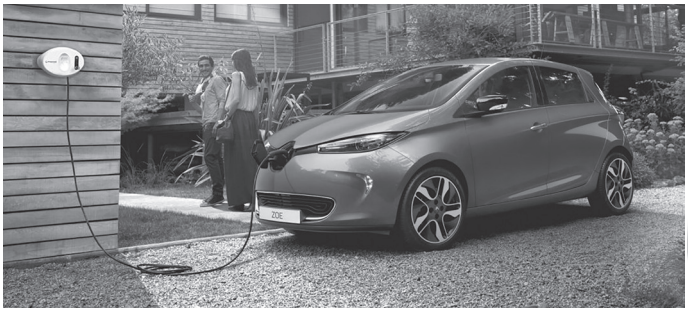

electric car being charged

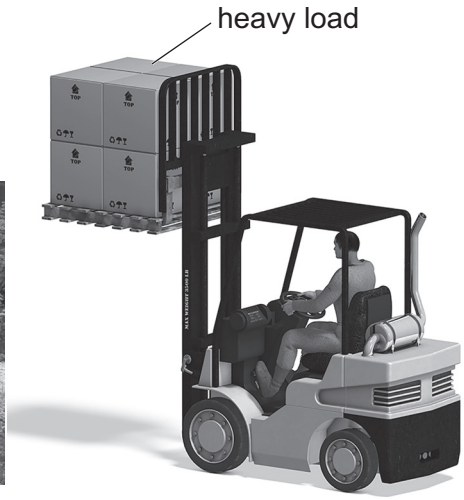

fork-lift truck in use

Fig. 7.1

(a) Modern electric cars use rechargeable batteries. The older fork-lift trucks, used on the flat floors of warehouses, also use rechargeable batteries. In each case, the batteries are housed under the vehicle seats. Data about the types of rechargeable battery are given in **Table 7.1**, where specific energy refers to the total energy stored per kg mass of the battery.

vehicle	type of battery	typical battery mass / kg	specific energy of the battery / kJ kg^{-1}
electric car	lithium-ion	275	940
fork-lift truck	lead-acid	900	130

Table 7.1

Use information from **Table 7.1** to explain why lithium-ion batteries are a good choice for use in electric cars while lead-acid batteries are a good choice for use in fork-lift trucks.

.....

.....

.....

.....

.....

..... **[4]**

© OCR 2021

(b) **(i)** Use data from **Table 7.1** to show that the total energy stored in the fully-charged lithium-ion battery is about 250 MJ.

[1]

Table 7.2 contains data for a typical electric car.

Mass of car / kg	Mass of battery / kg	maximum power of motor / kW	Battery e.m.f. / V	Range / km
1500	275	80	350	200

Table 7.2

(ii) At the maximum power, the motor draws a current of 230 A.

Calculate the resistance of the motor under these conditions. You can assume that the internal resistance of the battery is constant at 0.030 Ω.

resistance = ... Ω **[2]**

(iii) Assuming that travelling for the given range at a speed of 80 km h^{-1} discharges the battery completely, show that the mean power drawn from the battery is about one-third of the maximum power of the motor.

[2]

© OCR 2021

(c)* **Table 7.3** displays data for two different EVs sold as family cars.

	Car A	Car B
range / km	320 (200 miles)	148 (92.5 miles)
total mass / kg	1475	1100
maximum power / kW	80	47
battery capacity / kWh	50	16
time to accelerate from 0–100 km h^{-1} / s	11.4	15.9
number of seats	5	4

Table 7.3

Use data from **Table 7.3** to compare their suitability as family cars. You should consider them in terms of their performance and their convenience in use. **[6]**

.....

.....

.....

.....

.....

.....

.....

.....

.....

.....

.....

.....

.....

.....

.....

© OCR 2021

Additional answer space if required

.....

.....

.....

.....

.....

.....

.....

.....

© OCR 2021

SECTION C

8 A student is doing an experiment to determine the velocity of sound in air using a resonance tube as shown in **Fig. 8.1**.

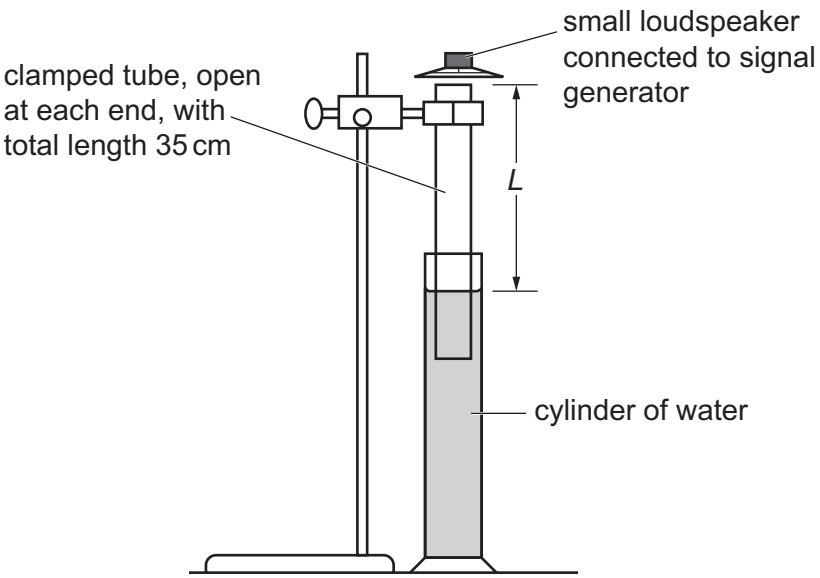

Fig. 8.1

The water level in the clamped tube is adjusted by moving the outer cylinder of water up and down. At certain positions the air in the clamped tube resonates with the loudspeaker, amplifying the sound. The length L, the distance from the water level to the top of the clamped tube, is the resonant length.

(a)* The student knows that the shortest resonant length L_1 is approximately $\frac{1}{4}\lambda$ and that the speed of sound in air is close to $340\,\text{m}\,\text{s}^{-1}$. His signal generator has a frequency range 10 Hz–20 kHz and displays the frequency on a digital meter to 3 significant figures.

Describe how the student should perform the experiment to get a good set of readings of L, together with their uncertainties ΔL, for a range of frequencies f.

You do not have to explain how the data will be analysed. **[6]**

.....

.....

.....

.....

.....

.....

.....

.....

© OCR 2021

.....

.....

.....

.....

.....

.....

.....

(b) The antinode at the top of the standing wave is not exactly at the end of the clamped tube. It is a distance *C* above it. *C* depends on the shape and diameter of the tube.

As **Fig. 8.2** shows, $L_1 = \frac{\lambda}{4} - C$

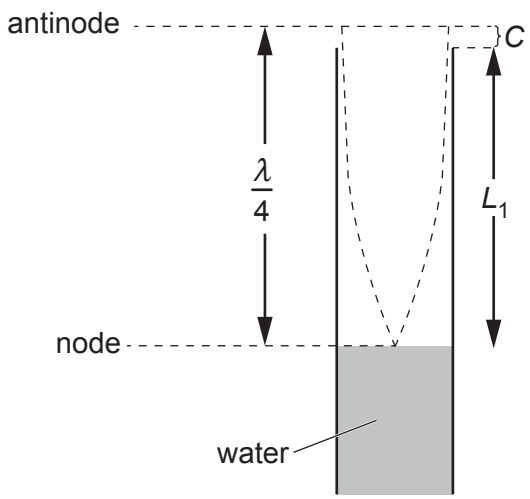

Fig. 8.2

Explain why a graph of $\frac{1}{f}$ (*y*-axis) against L_1 (*x*-axis) would be a straight line of gradient $\frac{4}{v}$ where *v* is the speed of sound in air.

[3]

© OCR 2021

(c) The table contains data obtained in the experiment.

f / Hz	$\frac{1}{f}$ / s	L_1 / m	ΔL / m
300	0.00333	0.274	0.010
400	0.00250	0.210	0.010
500	0.00200	0.158	0.015
600	0.00167	0.130	0.015
700	0.00143	0.108	0.015
800		0.098	0.020
900		0.081	0.020
1000	0.00100	0.070	0.025

(i) Suggest and explain **one** reason why the uncertainty ΔL varies as shown in the table.

.....

.....

..... **[2]**

(ii) State why uncertainties in frequency were **not** considered in the analysis.

.....

..... **[1]**

(iii) Complete the table to the appropriate precision and plot the missing data on the graph opposite. **[1]**

(iv) Draw appropriate straight lines on the graph and use these to find the value of the best-fit gradient and its uncertainty. From these values, obtain the speed of sound in air, v and its uncertainty, Δv.

© OCR 2021

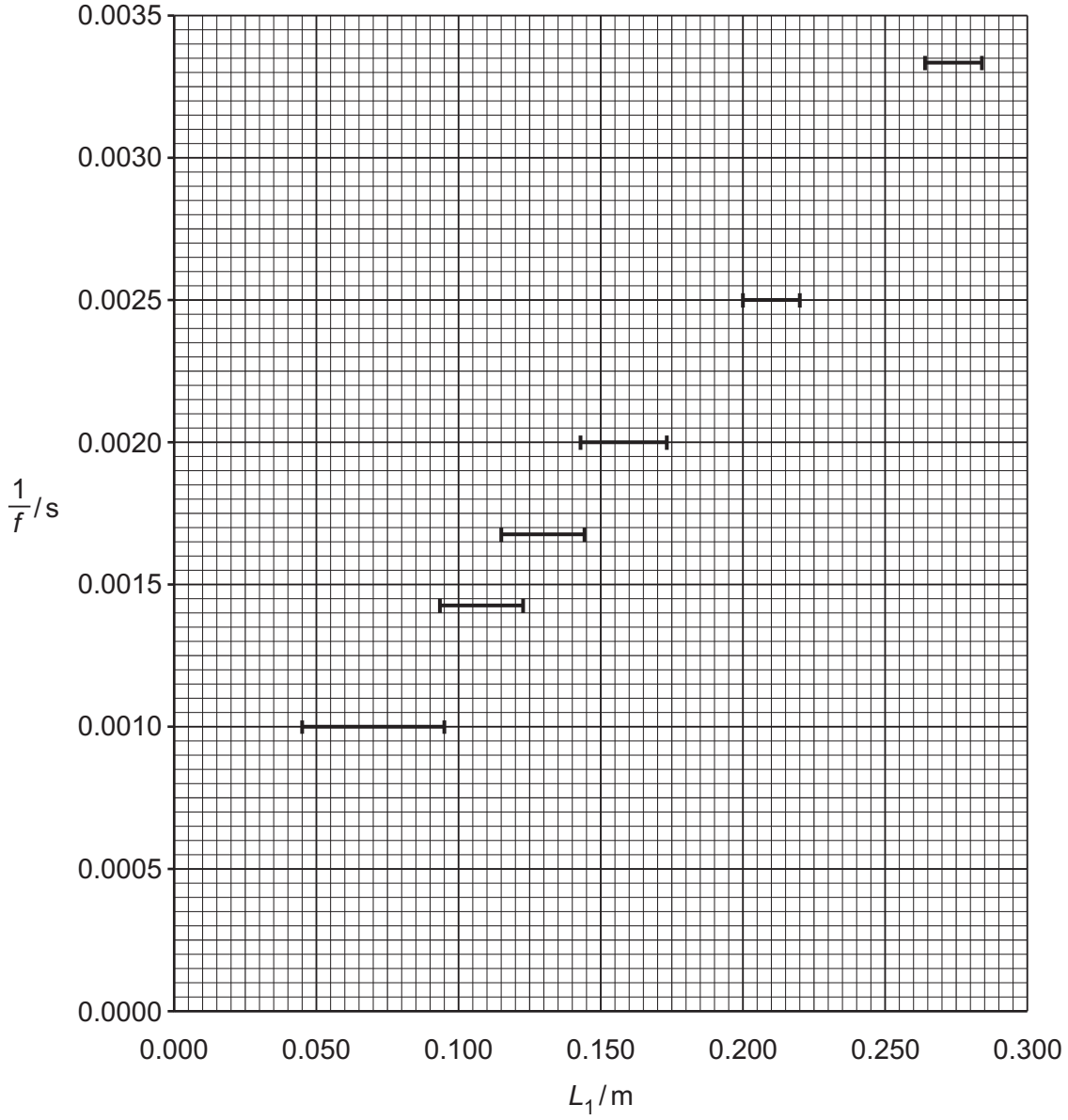

v = ... m s^{-1} Δv = ... m s^{-1} **[4]**

END OF QUESTION PAPER

© OCR 2021

ADDITIONAL ANSWER SPACE

If additional space is required, you should use the following lined page(s). The question number(s) must be clearly shown in the margin(s).

© OCR 2021

© OCR 2021

OCR
Oxford Cambridge and RSA

Copyright Information

OCR is committed to seeking permission to reproduce all third-party content that it uses in its assessment materials. OCR has attempted to identify and contact all copyright holders whose work is used in this paper. To avoid the issue of disclosure of answer-related information to candidates, all copyright acknowledgements are reproduced in the OCR Copyright Acknowledgements Booklet. This is produced for each series of examinations and is freely available to download from our public website (www.ocr.org.uk) after the live examination series.

If OCR has unwittingly failed to correctly acknowledge or clear any third-party content in this assessment material, OCR will be happy to correct its mistake at the earliest possible opportunity.

For queries or further information please contact The OCR Copyright Team, The Triangle Building, Shaftesbury Road, Cambridge CB2 8EA.

OCR is part of the Cambridge Assessment Group; Cambridge Assessment is the brand name of University of Cambridge Local Examinations Syndicate (UCLES), which is itself a department of the University of Cambridge.

© OCR 2021