Oxford Cambridge and RSA

Friday 8 October 2021 – Morning

AS Level Physics B (Advancing Physics)

H157/01 Foundations of physics

Time allowed: 1 hour 30 minutes

You must have:
- the Data, Formulae and Relationships Booklet

You can use:
- a scientific or graphical calculator
- a ruler (cm/mm)

Please write clearly in black ink. **Do not write in the barcodes.**

Centre number | | | | | | Candidate number | | | | |

First name(s) _____

Last name _____

INSTRUCTIONS
- Use black ink. You can use an HB pencil, but only for graphs and diagrams.
- Write your answer to each question in the space provided. If you need extra space use the lined pages at the end of this booklet. The question numbers must be clearly shown.
- Answer **all** the questions.
- Where appropriate, your answer should be supported with working. Marks might be given for a correct method, even if your answer is wrong.

INFORMATION
- The total mark for this paper is **70**.
- The marks for each question are shown in brackets **[ ]**.
- This document has **24** pages.

ADVICE
- Read each question carefully before you start your answer.

© OCR 2021 [601/4744/1]
DC (ST/SG) 300874/4
OCR is an exempt Charity

SECTION A

You should spend a maximum of 25 minutes on this section.

Answer **all** the questions.

1 Ceramic materials are typically

A Brittle and strong

B Brittle and tough

C Strong and shiny

D Tough and flexible

Your answer ☐

[1]

2 Each pixel in an image is one of 65 000 different colours.

How many bits are required to store the colour information for each pixel?

A 5

B 12

C 15

D 16

Your answer ☐

[1]

© OCR 2021

3 Which row of the table is correct for an elastic collision?

	momentum	**kinetic energy**
A	conserved	conserved
B	conserved	not conserved
C	not conserved	conserved
D	not conserved	not conserved

Your answer ☐

[1]

4 Which section of this velocity-time graph shows the part of the journey where the acceleration has the greatest magnitude?

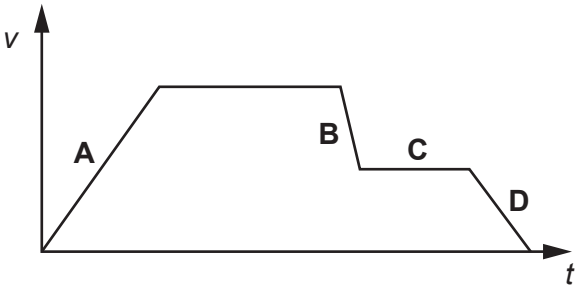

Your answer ☐

[1]

5 A particle travels through a distance equal to its de Broglie wavelength.

During this time, its phasor will rotate through an angle

A $\frac{\pi}{2}$

B π

C $\frac{3\pi}{2}$

D 2π

Your answer ☐

[1]

© OCR 2021

6 Which of these is a benefit of digital signals over analogue signals?

A Amplifying a digital signal boosts the signal and noise.

B Digital signals never need to be amplified.

C Digital signals never pick up noise during transmission.

D Noisy digital signals can be regenerated accurately.

Your answer ☐

[1]

7 A source of plane-polarised light of intensity A_0 is viewed through a polarising filter.

The axis of the filter is perpendicular to the axis of polarisation of the light source.

The expected brightness observed is

A $-A_0$

B 0

C $\frac{1}{2}A_0$

D A_0

Your answer ☐

[1]

© OCR 2021

8

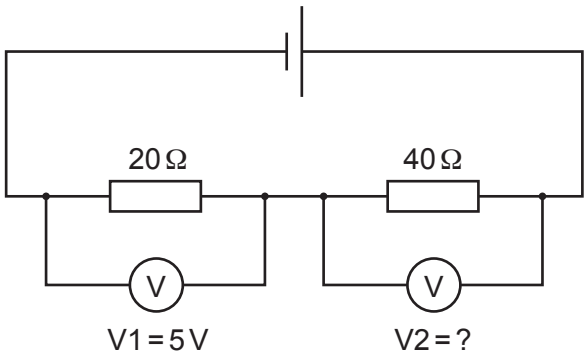

In this circuit the reading on the voltmeter V2 is

A 2.5 V

B 5 V

C 10 V

D 40 V

Your answer ☐

[1]

9 The diagram shows a sample of pure silicon.

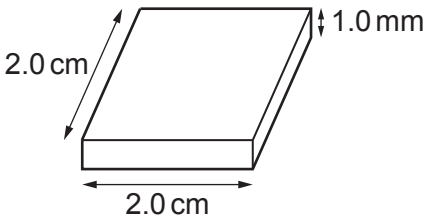

The charge carrier number density of pure silicon is $1.0 \times 10^{16}\,m^{-3}$. The number of charge carriers in the sample is

A 4.0×10^{9}

B 4.0×10^{16}

C 2.5×10^{15}

D 2.5×10^{24}

Your answer ☐

[1]

© OCR 2021

10 Which graph shows the relationship between electrical power P and current I through an ohmic resistor?

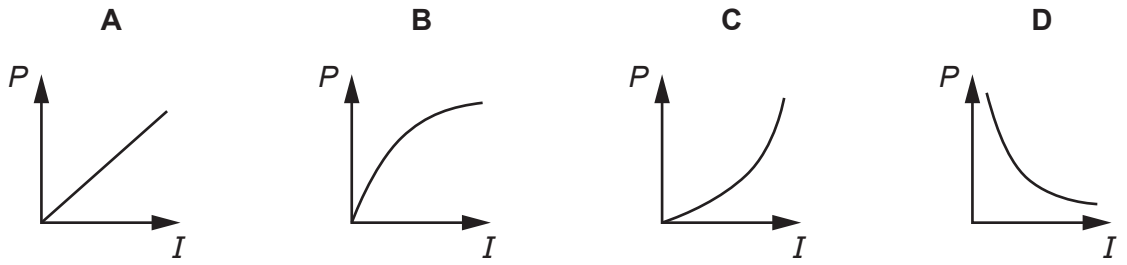

Your answer ☐

[1]

11 Dislocations in the microscopic structure of metals lead to

A Brittleness of the material

B High conductivity of the material

C Molecular chains unravelling

D Slip of planes of atoms

Your answer ☐

[1]

12 A wire has resistance R.

Another wire made of the same material has half the **diameter** and twice the **length** of the first wire.

The resistance of this wire is

A $\frac{1}{2}$ R

B R

C 4R

D 8R

Your answer ☐

[1]

© OCR 2021

13 A light ray passes from air into a transparent plastic block.

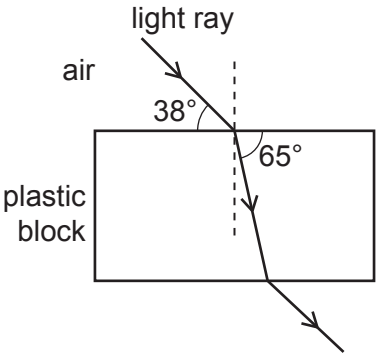

The refractive index of the plastic used to make the block is

A 0.54

B 0.68

C 1.47

D 1.86

Your answer ☐

[1]

14 What is the total resistance between terminals X and Y?

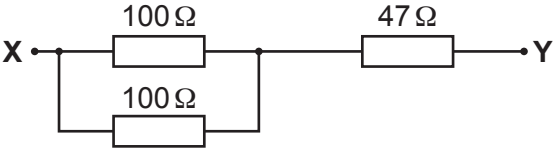

A 47.02 Ω

B 97 Ω

C 147 Ω

D 247 Ω

Your answer ☐

[1]

© OCR 2021

15 A projectile at height 5 m above the ground is launched horizontally at speed $10\,\mathrm{m\,s^{-1}}$.

Ignore the effect of air resistance.

Which statement is correct?

A The horizontal distance travelled before the projectile hits the ground does **not** depend on the speed.

B The horizontal distance travelled before the projectile hits the ground does **not** depend on the height.

C The time taken before the projectile hits the ground depends on the height.

D The time taken before the projectile hits the ground depends on the speed.

Your answer ☐

[1]

16 In a standing wave, the distance between two adjacent nodes is

A $\lambda/4$

B $\lambda/2$

C λ

D 2λ

Your answer ☐

[1]

© OCR 2021

17 A trolley of mass 500 g is moving at 20 cm s^{-1} on a linear air track.

It collides with an identical stationary trolley.

The two trolleys stick together.

Calculate the speed at which they move after the collision.

A – 10 cm s^{-1}

B 0 cm s^{-1}

C 10 cm s^{-1}

D 20 cm s^{-1}

Your answer ☐

[1]

18 The conductance G of a volume V of conducting putty rolled into a cylinder of length l is

$$G = \frac{V}{\rho l^2}$$

Which combination of measurement precision will give the most precise value for G?

	V	ρ	l
A	±12%	±3%	±2%
B	±12%	±2%	±4%
C	±10%	±2%	±4%
D	±12%	±4%	±2%

Your answer ☐

[1]

© OCR 2021

19 An engineer is estimating the load on a steel beam.

There are 80 bricks on the beam. Each brick has mass 2.5 ± 0.1 kg.

The true load on the beam most likely lies in the range

A 192.0 – 208.0 kg

B 199.8 – 200.2 kg

C 199.9 – 200.1 kg

D 200.0 – 208.0 kg

Your answer ☐

[1]

20 In a double-slit experiment, the fringe spacing x is approximately given by

$$x = \frac{D\lambda}{d}$$

where D is the distance between the double-slit and the screen, d is the slit separation and λ is the wavelength of light used.

This is a good approximation when

A $D \sim d$

B $D >> d$

C $D \sim \lambda$

D $D >> \lambda$

Your answer ☐

[1]

© OCR 2021

SECTION B

Answer **all** the questions.

21 Graphite is made up of sheets of carbon atoms in a hexagonal arrangement.

The diagram shows an image of a sample of graphite, produced using scanning tunnelling microscopy (STM).

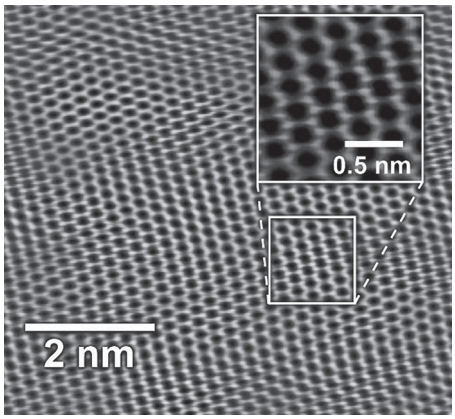

In the magnified area, six light dots form a ring around a dark spot. The light dots are carbon atoms and the dark spots are holes in the structure.

(a) Use the image to estimate the minimum separation of the carbon atoms in graphite.

separation = ... nm **[1]**

(b) Show that the number of carbon atoms in a 1.0 cm^3 sample of graphite is about 1.1×10^{23}.

The density of graphite is 2.10 $g\,cm^{-3}$.
The mass of a carbon atom is 2.0×10^{-26} kg.

[2]

(c) Estimate the separation of carbon atoms in graphite using data from **(b)**.

separation = ... nm **[2]**

© OCR 2021

22 **(a)** What term is used to describe two light sources with a constant phase relationship?

..... **[1]**

(b) A diffraction grating is ruled with 250 lines per mm.

Determine the spacing of the lines.

line spacing = ... mm **[1]**

(c) A laser emits light of wavelength 650 nm.

The light is passed through a different diffraction grating with line spacing 5.0×10^{-6} m.

Calculate the angle, in degrees, of the first order maximum.

first order maximum = ...° **[3]**

© OCR 2021

23 A solar sail is a proposed method of spacecraft propulsion.

Fig. 23.1 shows an artist's impression of a solar sail in orbit.

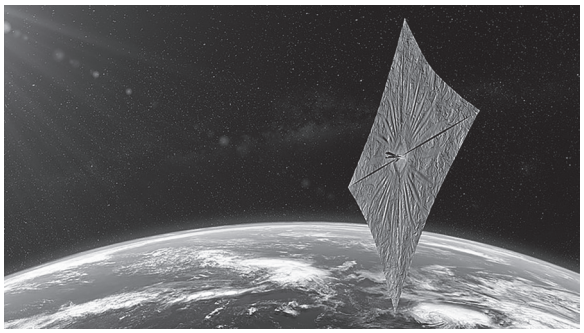

Fig. 23.1

Photons from sunlight transfer momentum to the sail when they are reflected off it.

(a) Show that the momentum of a photon of wavelength 560 nm is about 1.2×10^{-27} N s.

[2]

This photon, of momentum p, is reflected from the sail as shown in **Fig. 23.2**.

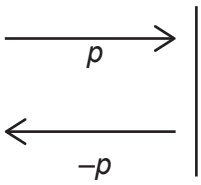

Fig. 23.2

(b) State the change in momentum of the photon.

..... **[1]**

(c) Explain why there is a force on the solar sail.

.....

.....

..... **[2]**

© OCR 2021

24 A converging lens is used to project an image of a candle onto a piece of card.

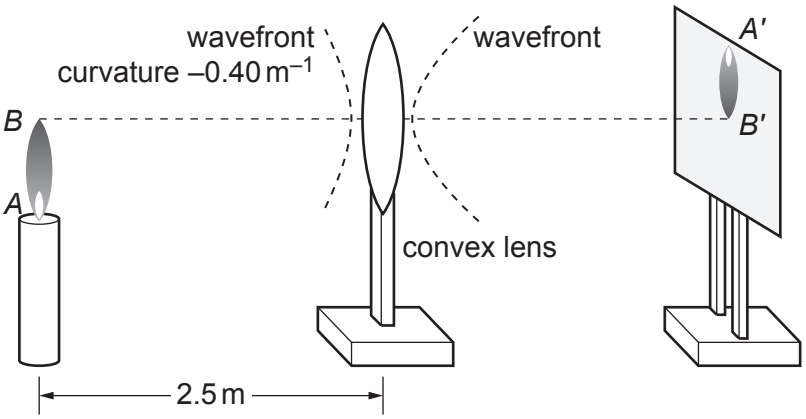

The power of the lens is 2.0 D.

The candle flame produces light with circular wavefronts.

The curvature of these wavefronts at the lens is –0.40 m^{-1}.

(a) Calculate the curvature of the wavefront on the right of the lens.

curvature = ... m^{-1} **[2]**

The candle is moved further away from the lens (to the left) and the image on the card becomes blurred.

(b) State how to move the card to re-focus the image.

.....

..... **[1]**

(c) Describe **two** differences in the appearance of this image compared to the original image.

1 ..... **[1]**

2 ..... **[1]**

© OCR 2021

SECTION C

Answer **all** the questions.

25 A student is modelling the behaviour of the springs supporting a car axle.

(a) Explain why metals are a good choice of material for making car suspension springs.

.....

.....

..... **[2]**

The student sets up the apparatus shown in **Fig. 25** to investigate the behaviour of a pair of springs for her model.

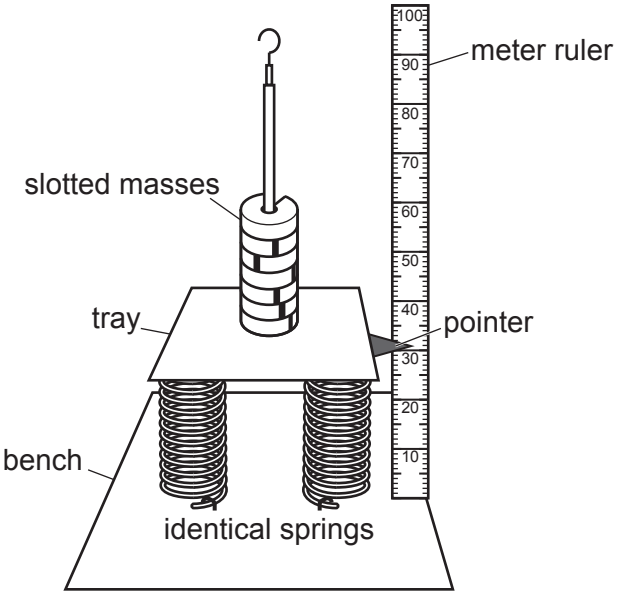

Fig. 25

(b) Why did the student use the pointer to read the scale?

.....

..... **[1]**

© OCR 2021

The student's results are shown in the table below.

Mass in tray / g	Pointer reading / cm	Compression / cm
0	20.0	0.0
50	18.5	1.5
100	17.2	
150	15.8	
200	14.4	
250	13.2	6.8

(c) Complete the table with values of compression. **[1]**

(d) Determine the spring constant of the system and give the unit.

spring constant = ... unit ..... **[3]**

(e) Describe how the results would differ if a third identical spring were added beneath the tray.

.....

..... **[2]**

© OCR 2021

BLANK PAGE

PLEASE DO NOT WRITE ON THIS PAGE

Question 26 begins on page 18

© OCR 2021

26 A student makes a video of themselves dropping a ball alongside a ruler.

The video frames are overlaid and shown in the drawing below.

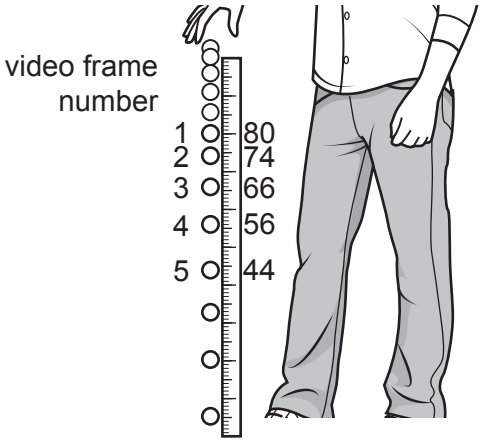

The student records the scale reading alongside the ball's position for each video frame.

Frame number	Scale reading / cm	Speed / cm s^{-1}
1	80	–
2	74	132
3		176
4	56	220
5	44	

(a) Use the drawing to complete the missing **scale reading** in the table. **[1]**

(b) The video was captured at 22 frames per second.

Show that the time between each video frame is 0.045 s to **2** significant figures.

[2]

© OCR 2021

(c) Calculate the average speed of the ball between positions 4 and 5.

speed = ... $cm\,s^{-1}$ **[2]**

(d) Use the data in the table to estimate the average acceleration of the ball.

acceleration = ... $cm\,s^{-2}$ **[3]**

(e) Suggest one way the student could improve the precision of their measurements.

.....

..... **[1]**

© OCR 2021

27 The diagram shows an experiment to determine the e.m.f. and internal resistance of a potato cell.

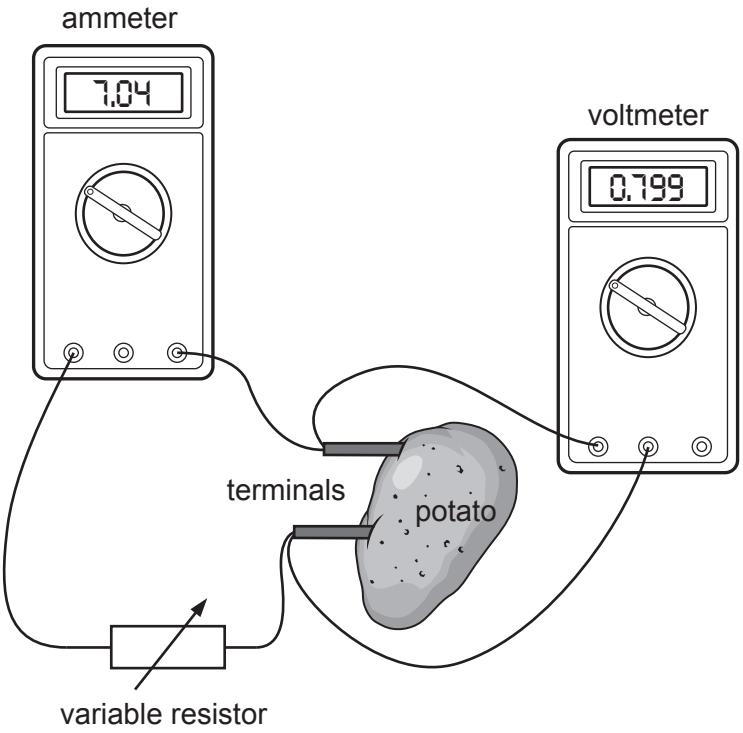

Fig. 27.1

In **Fig. 27.1** the current is 7.04 μA and the p.d. across the potato cell terminals is 0.799 V.

When the ammeter and resistor are disconnected, the voltmeter reads 0.825 V.

(a) Explain what is meant by the term e.m.f.

.....

.....

..... **[2]**

(b) Calculate the internal resistance of the cell.

resistance = ... Ω **[3]**

© OCR 2021

A student records the p.d. and current values for several different values of the variable resistor.

The results are shown in **Fig. 27.2** below.

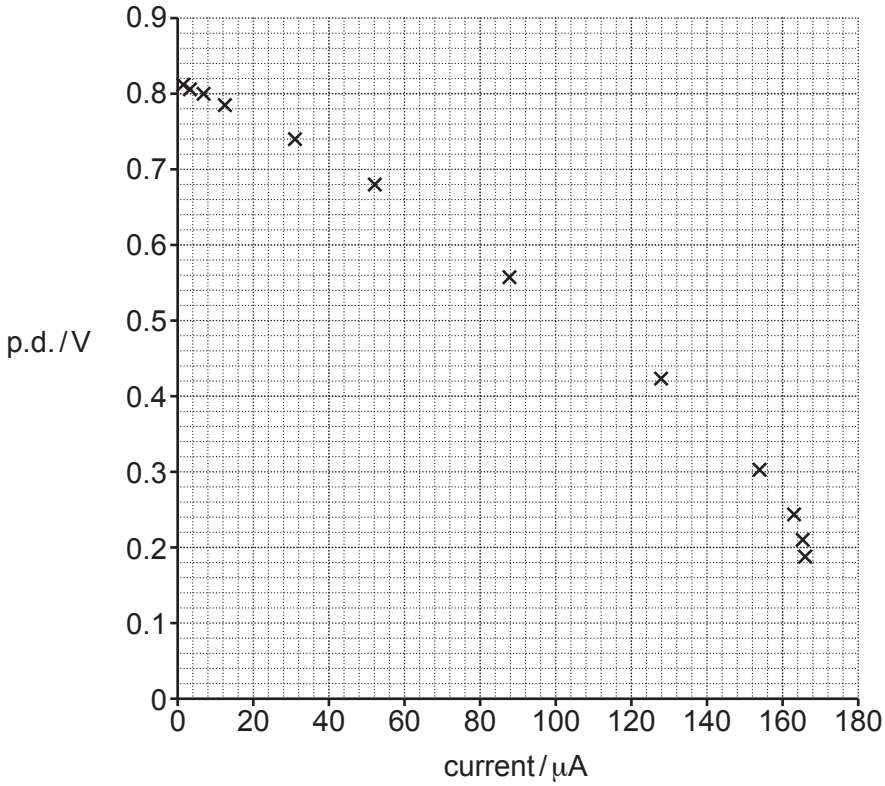

Fig. 27.2

(c) The student considers whether to treat the points with current above 150 μA as anomalies and ignore them in the analysis.

(i) Suggest **one** reason why the four points should be treated as anomalies.

..... **[1]**

(ii) Suggest **one** reason why the four points should **NOT** be treated as anomalies.

..... **[1]**

© OCR 2021

(d) The student decides to ignore the points with current over 150 μA.

Assuming the student is correct, use the graph in **Fig. 27.2** to determine the following.

(i) The e.m.f. of the cell.

e.m.f. = ... V **[1]**

(ii) The internal resistance.

resistance = ... Ω **[2]**

(e) Discuss whether this value of the internal resistance is better than your answer in part **(b)**.

.....

.....

..... **[2]**

END OF QUESTION PAPER

© OCR 2021

ADDITIONAL ANSWER SPACE

If additional space is required, you should use the following lined page(s). The question number(s) must be clearly shown in the margin(s).

© OCR 2021

OCR
Oxford Cambridge and RSA

Copyright Information

OCR is committed to seeking permission to reproduce all third-party content that it uses in its assessment materials. OCR has attempted to identify and contact all copyright holders whose work is used in this paper. To avoid the issue of disclosure of answer-related information to candidates, all copyright acknowledgements are reproduced in the OCR Copyright Acknowledgements Booklet. This is produced for each series of examinations and is freely available to download from our public website (www.ocr.org.uk) after the live examination series.

If OCR has unwittingly failed to correctly acknowledge or clear any third-party content in this assessment material, OCR will be happy to correct its mistake at the earliest possible opportunity.

For queries or further information please contact The OCR Copyright Team, The Triangle Building, Shaftesbury Road, Cambridge CB2 8EA.

OCR is part of the Cambridge Assessment Group; Cambridge Assessment is the brand name of University of Cambridge Local Examinations Syndicate (UCLES), which is itself a department of the University of Cambridge.

© OCR 2021