Oxford Cambridge and RSA

Friday 09 October 2020 – Morning

AS Level Physics B (Advancing Physics)

H157/01 Foundations of physics

Time allowed: 1 hour 30 minutes

You must have:
- the Data, Formulae and Relationships Booklet

You can use:
- a scientific or graphical calculator
- a ruler (cm/mm)

Please write clearly in black ink. **Do not write in the barcodes.**

Centre number | | | | | | Candidate number | | | | |

First name(s) _____

Last name StemUp Model Solution

INSTRUCTIONS
- Use black ink. You can use an HB pencil, but only for graphs and diagrams.
- Write your answer to each question in the space provided. If you need extra space use the lined pages at the end of this booklet. The question numbers must be clearly shown.
- Answer **all** the questions.
- Where appropriate, your answer should be supported with working. Marks might be given for a correct method, even if your answer is wrong.

INFORMATION
- The total mark for this paper is **70**.
- The marks for each question are shown in brackets **[ ]**.
- This document has **28** pages.

ADVICE
- Read each question carefully before you start your answer.

© OCR 2020 [601/4744/1]
DC (ST/SW) 189500/5
OCR is an exempt Charity

stemup.co.uk

SECTION A

You should spend a maximum of 25 minutes on this section.

Answer **all** the questions.

1 Which method of image manipulation could be used to show different temperatures in an infra-red image?

A edge detection

B enhanced contrast

C false colour

D noise reduction

Your answer C

[1]

2 Which unit is equivalent to the volt?

A joule per coulomb

B joule per second

C watt per coulomb

D watt per second

Your answer A

[1]

© OCR 2020

3 In the diagram below each resistor has resistance 30 Ω.

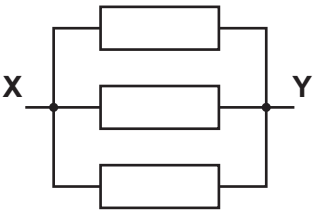

What is the total resistance between **X** and **Y**?

A 0.1 Ω

B 10 Ω

C 60 Ω

D 90 Ω

Your answer B

[1]

4 The best estimate for the average speed of a professional 100 m runner is

A $0.1\,m\,s^{-1}$

B $1\,m\,s^{-1}$

C $10\,m\,s^{-1}$

D $100\,m\,s^{-1}$

Your answer C

[1]

© OCR 2020

stemup.co.uk

5 The diagram shows an analogue signal.

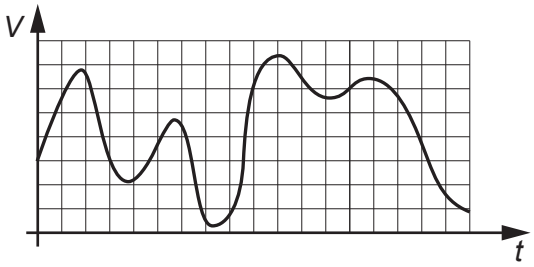

Which diagram best represents the signal sampled using 3 bits?

A

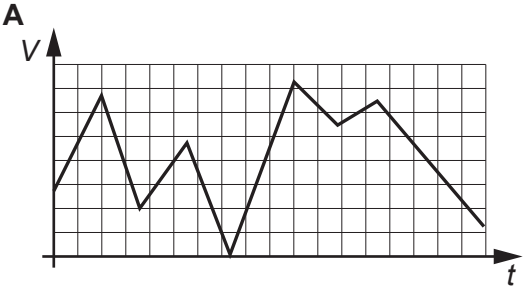

B

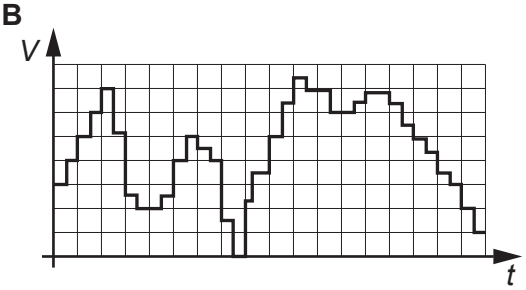

C

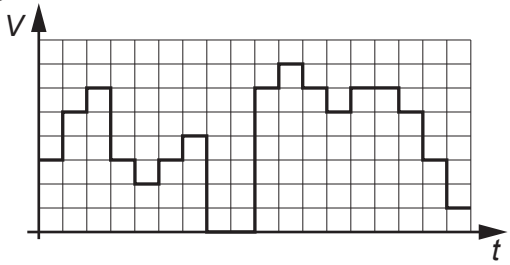

D

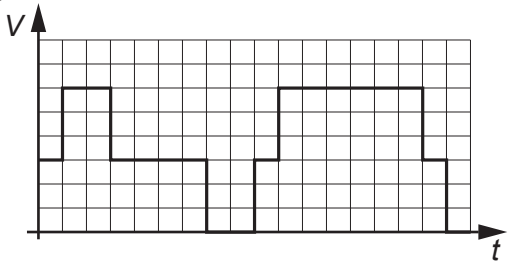

Your answer C

[1]

6 The energy required for a single photon to free one electron from a metal surface with no resultant kinetic energy is called the

A electron-volt.

B Planck constant.

C threshold frequency.

D work function.

Your answer D

[1]

© OCR 2020

7 A 100 g glider travelling at $0.50\,m\,s^{-1}$ on an air track collides with an identical stationary glider and sticks to it.

Calculate the speed of the two gliders after the collision.

A $0.25\,m\,s^{-1}$

B $0.50\,m\,s^{-1}$

C $1.0\,m\,s^{-1}$

D $4.0\,m\,s^{-1}$

Your answer A

[1]

8 Which is the correct unit for stress?

A newton (N)

B newton-metre (N m)

C no unit

D pascal (Pa)

Your answer D

[1]

9 A high resistance voltmeter, connected to the terminals of a cell, reads 1.5 V. When an 8.0 Ω resistor is connected in parallel with the voltmeter, the p.d. drops to 1.2 V.

What is the internal resistance of the cell?

A 1.6 Ω

B 2.0 Ω

C 6.0 Ω

D 6.4 Ω

Your answer B

[1]

© OCR 2020

stemup.co.uk

10 Calculate the work done by gravity when the car shown below, of mass 500 kg, rolls 50 m down a hill which slopes at an angle of 8 degrees.

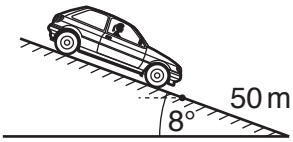

A 3 kJ

B 34 kJ

C 243 kJ

D 250 kJ

Your answer B

[1]

11 Which row of the table correctly describes how the frequency and speed of a wave might change during refraction?

	Frequency	Speed
A	same	same
B	same	increases
C	increases	decreases
D	decreases	decreases

Your answer B

[1]

© OCR 2020

This graph is for use in questions **12** and **13**.

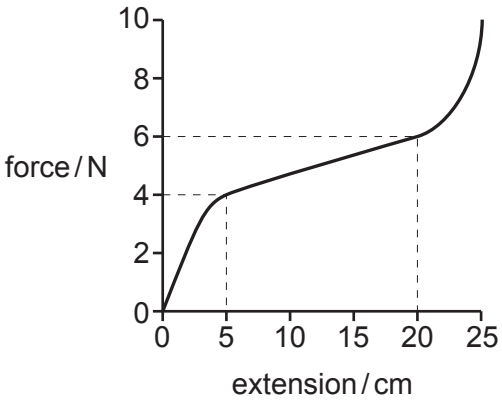

The graph shows a force-extension curve for a rubber band.

12 Estimate the extra energy stored in the rubber band when the extension increases from 5 cm to 20 cm.

A 0.15 J

B 0.75 J

C 30 J

D 100 J

Your answer B

[1]

13 The original length of the rubber band is 10 cm.

Calculate the strain in the rubber band when 4 N is applied.

A 0.4

B 0.5

C 4

D 5

Your answer B

[1]

© OCR 2020

stemup.co.uk

14 Red laser light is diffracted through a single slit.

When the slit width is increased, the diffraction pattern becomes

A narrower and brighter.

B narrower and dimmer.

C wider and brighter.

D wider and dimmer.

Your answer A

[1]

15 Two waves travelling in opposite directions interfere to produce a standing wave.

Nodes occur where the two waves meet with a phase difference of

A 0

B $\pi/2$

C π

D $3\pi/2$

Your answer C

[1]

16 The area under a force-time graph represents

A distance travelled.

B impulse.

C power.

D work done.

Your answer B

[1]

© OCR 2020

17 An aircraft travelling horizontally at $50\,ms^{-1}$ releases a food parcel of mass 500 kg from a height of 500 m.

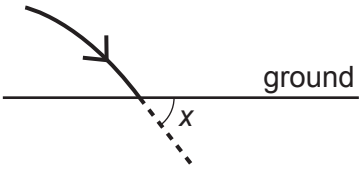

Calculate the angle, *x*, at which the parcel strikes the ground. Ignore the effect of air resistance.

A 10°

B 27°

C 63°

D 89°

Your answer C

[1]

18 A student measures the p.d. across and current through an electrical component and calculates its resistance.

p.d. / V	5.62
current / A	0.5

Which calculated value of resistance shows the correct number of significant figures?

A 10 Ω

B 11 Ω

C 11.2 Ω

D 11.24 Ω

Your answer A

[1]

© OCR 2020

stemup.co.uk

19 The graph shows how the resistance of four different components changes with temperature.

Which component would be best to use as a temperature sensor for a domestic hot water central heating system?

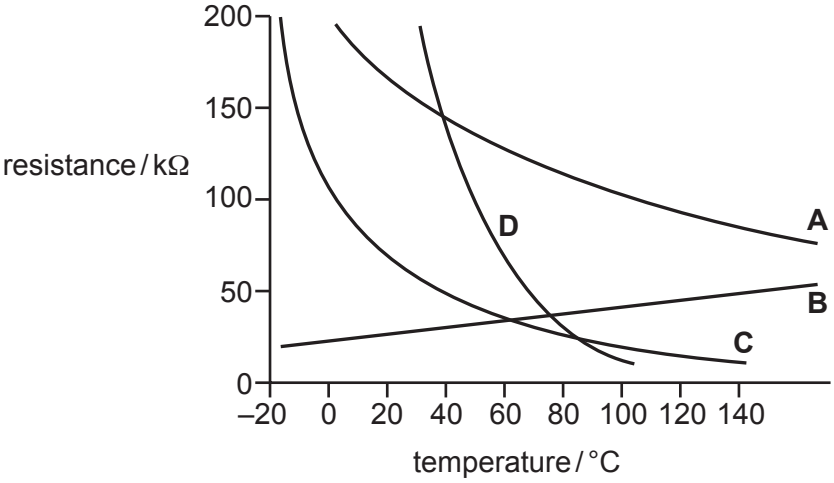

Your answer D

[1]

20 A student calculates the resistivity of a material using the formula

$$\rho = \frac{R \pi r^2}{L}$$

The values of R, L and r are all measured with a percentage uncertainty of 1%.

The percentage uncertainty in the calculated value for resistivity is approximately

A 1%

B 2%

C 3%

D 4%

Your answer D

[1]

© OCR 2020

SECTION B

Answer **all** the questions.

21 The photograph shows a scanning tunnelling microscope (STM) image of carbon atoms in graphite.

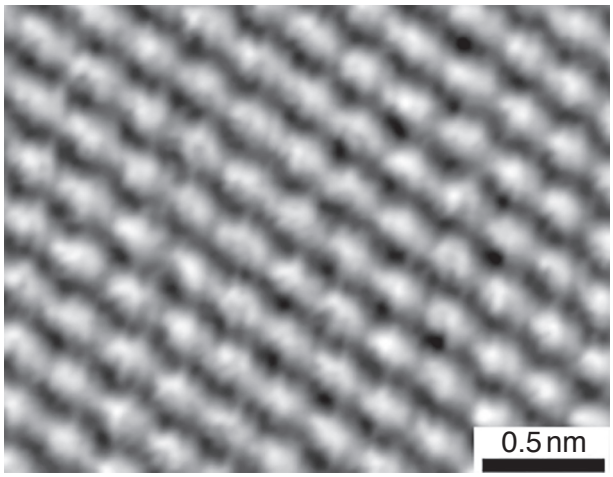

The image is 457 × 353 pixels.

Each pixel is one of 256 shades of grey.

(a) How many bits are required to distinguish the 256 shades?

number of bits = ...8..... **[1]**

(b) Calculate the amount of information in the image, in kilobytes.

number of bytes = 457 × 353 = 161 321 bytes (1 byte = 8 bits per pixel)

information = 457 × 353 / 1024

information = 158 kB

information = ...158..... kB **[2]**

© OCR 2020

stemup.co.uk

22 The diagram shows the stress-strain curves for three different materials **A**, **B** and **C**.

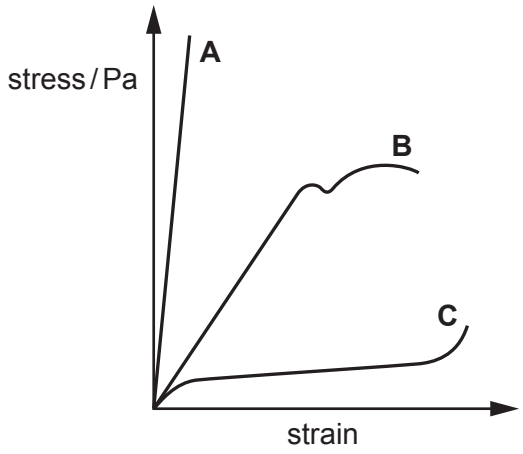

(a) Complete the table to show the class of material for each of **A**, **B** and **C**.

Class of material	Material
Polymer	C
Metal	B
Ceramic	A

[2]

(b) Which material

(i) has the greatest **stiffness**?

A ..... **[1]**

(ii) has the greatest **strength**?

A ..... **[1]**

© OCR 2020

23 A student is investigating the change in temperature of metal blocks when heated.

She uses a heater to change the temperature of a range of metal blocks.

The diagram below shows the circuit she uses.

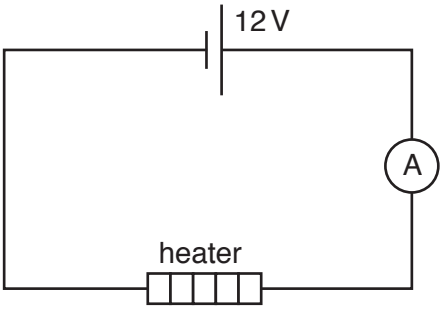

(a) Calculate the power dissipated in the heater when the current is 2.4 A and give the unit.

$P = VI = 12 \times 2.4$

$P = 28.8$ W

power dissipated = ...28.8..... unit ....W..... **[3]**

The student replaces the heater with a different one. The resistance of the new heater is 4.0 Ω.

She uses the heater to heat a small aluminium block for 2 minutes.

(b) Calculate the amount of energy transferred by the heater.

$t = 2 \times 60 = 120$ s

$E = V^2t / R = 12^2 \times 120 / 4.0$

$E = 4320$ J

energy = ...4320..... J **[3]**

The student finds information in a text book that suggests this amount of energy should raise the temperature of the block by 12 °C.

In her experiment, the temperature of the block increases by only 10 °C.

(c) Explain why the temperature increase is less than expected.

..Energy..is..dissipated..(lost)..to..the..surroundings,..e.g..heating..the..air..around..the.....

..block,..so..less..energy..goes..to..heating..the..block..itself..and..its..temperature..rises.....

..less..... **[2]**

© OCR 2020

stemup.co.uk

24 An automatic light switch uses the circuit shown below. When the room becomes dark, the light is switched on automatically using a digital switch.

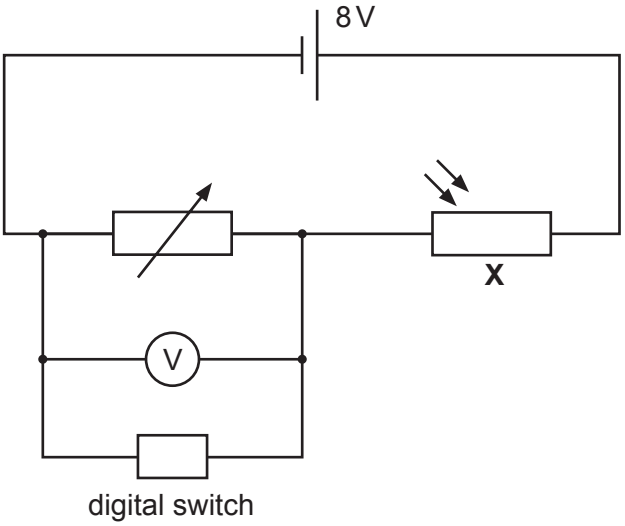

(a) State the name of the component marked **X**.

Light dependent resistor (LDR) ..... **[1]**

The variable resistor is set to 18 kΩ.

When the p.d. across the digital switch is 6.0 V it turns on the room light.

(b) Calculate the resistance of component **X** when this happens.

p.d. across X = 8.0 − 6.0 = 2.0 V

$V_X / V_R = R_X / R$: 2.0 / 6.0 = R_X / 18 000

R_X = 6000 Ω

resistance = 6000 ..... Ω **[2]**

(c) Describe the steps the manufacturer must take to **calibrate** the sensor so that the switch turns on the light when the room is just dark enough.

Set the room lighting to the required level, the point at which the light should just turn on. Then adjust the variable resistor until the reading on V is 6.0 V, so the switch turns on at this light level. ..... **[2]**

© OCR 2020

BLANK PAGE

PLEASE DO NOT WRITE ON THIS PAGE

SECTION C begins on page 16

© OCR 2020

stemup.co.uk

SECTION C

Answer **all** the questions.

25 The diagram shows a sequence of video frames of a ball falling through a cylinder of oil.

The horizontal lines on the cylinder mark 1 mm vertical intervals.

The frames were captured at 800 ms intervals.

The first frame, n = 1, is taken at t = 0 s when the ball is released from rest.

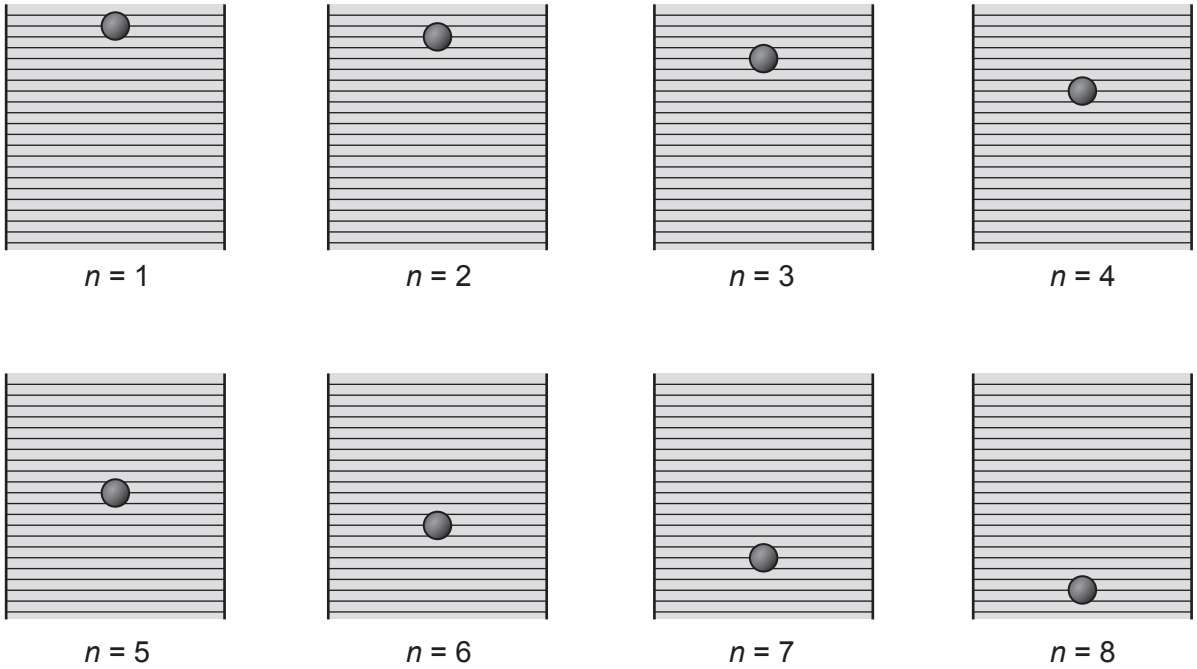

(a) Calculate the average speed in m s^{-1} of the ball between frame number n = 2 and n = 3.

distance = 2 mm = 2 × 10^{-3} m, time = 800 ms = 0.80 s

speed = 2 × 10^{-3} / 0.80 = 0.0025 m s^{-1}

average speed = ...0.0025..... m s^{-1} **[2]**

(b) Explain why your answer is **greater** than the instantaneous speed of the ball at t = 1 s.

..The ball is accelerating, so its speed varies between n = 2 and n = 3. 1 s is less.....

.than halfway, closer to n = 2 (0.8 s), so its speed there is less than the average..... **[2]**

© OCR 2020

The ball has reached terminal speed after frame n = 5.

(c) Explain how we know this from the video frame images.

The distance travelled between frames is constant (3 mm each frame) and remains constant for all subsequent frames after n = 5 **[2]**

(d) Determine **as precisely as possible** a value for the terminal speed of the ball.

from n = 5 to n = 8 (all four frames): 9 mm in 3 intervals

$v = 9 \times 10^{-3} / (3 \times 0.80) = 9 \times 10^{-3} / 2.4$

$v = 0.00375 \text{ m s}^{-1}$

terminal speed = 0.00375 m s^{-1} **[2]**

© OCR 2020

stemup.co.uk

26 A student observes a source of unpolarised light through a polarising filter.

(a) Describe what the student would observe as he rotates the filter.

No variation: it stays the same brightness as the filter is rotated.

..... **[1]**

The student uses the unpolarised light source to illuminate the surface of a glass block.

He measures the intensity of light reflected from the surface through a polarising filter, as shown in **Fig. 26.1**.

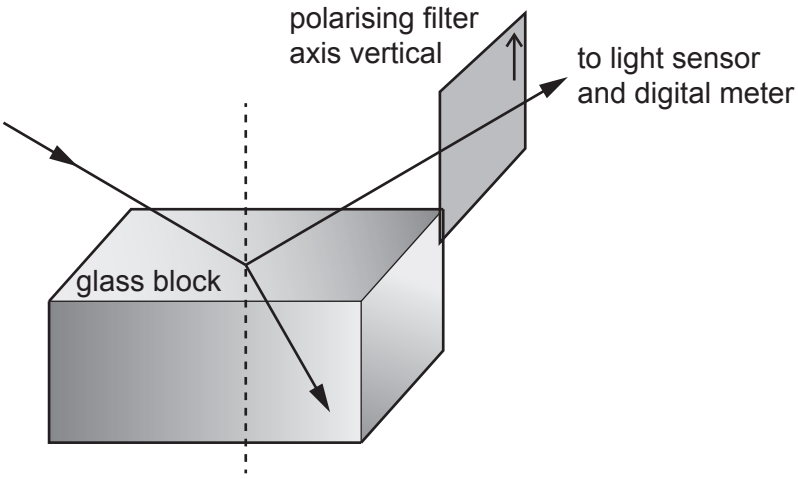

Fig. 26.1

© OCR 2020

The student varies the angle of incidence of the light ray.

Fig. 26.2 shows the graph of the reading on the light sensor which measures the intensity of the reflected ray against the angle of incidence.

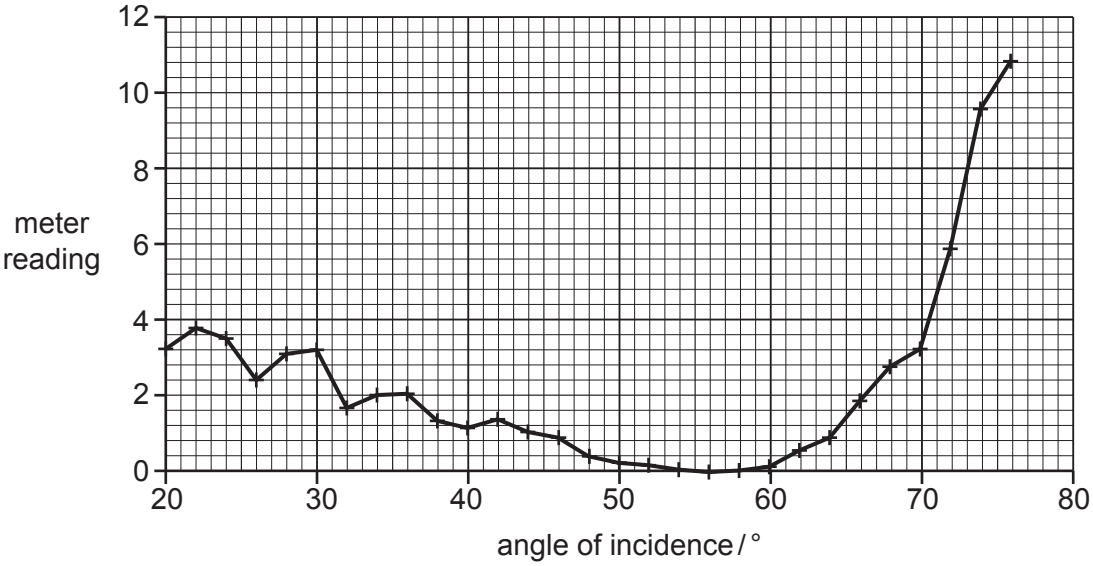

Fig. 26.2

(b) Describe how the meter reading changes as the angle of incidence increases from 50° to 70°.

The reading decreases to zero (at about 56°), then increases rapidly up to 70°.

..... **[2]**

The angle at which the meter reading is zero is called the Brewster angle.

(c) Estimate the Brewster angle from the graph.

Brewster angle ≈ ....56..... ° **[1]**

(d) Explain what the student can deduce about the reflected light at this angle.

The reflected light is completely plane polarised, perpendicular to the axis of the polarising filter (horizontally).

..... **[2]**

© OCR 2020

stemup.co.uk

The student wants to find a more precise value for the Brewster angle.

He repeats his measurements close to the minimum and plots them on a new graph with uncertainty bars. His graph is shown in **Fig. 26.3** below.

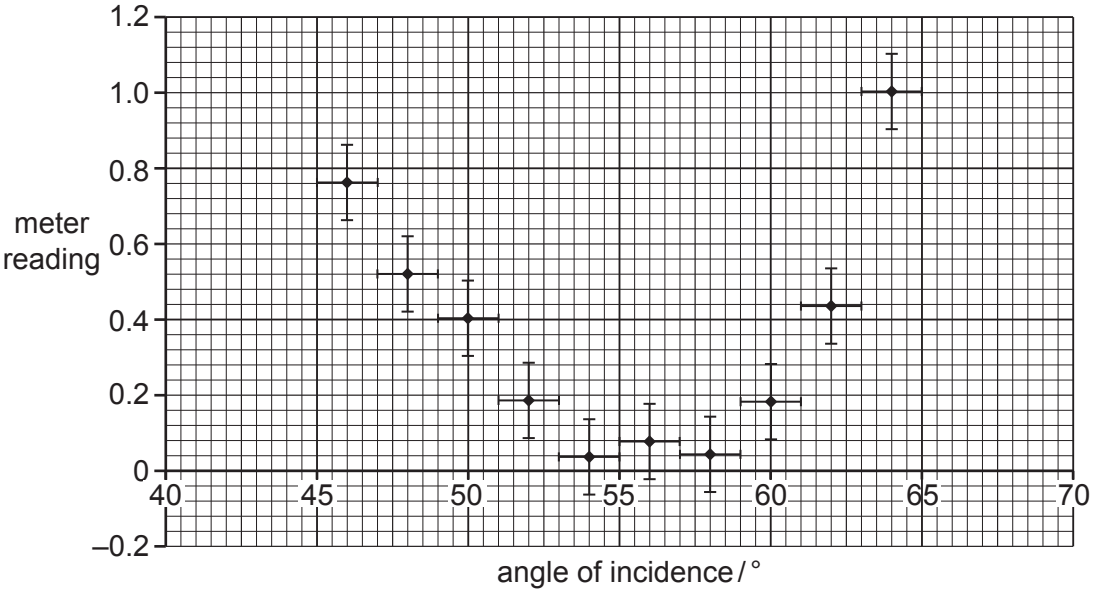

Fig. 26.3

(e) What is the absolute uncertainty in the measurement of angle?

absolute uncertainty = ...± 1°..... **[1]**

(f) Justify whether the results are consistent with a Brewster angle of 58°.

..Yes: a smooth curve with its minimum (zero) at 58° can be drawn which.....

.passes through all the error bars..... **[2]**

© OCR 2020

BLANK PAGE

PLEASE DO NOT WRITE ON THIS PAGE

Question 27 begins on page 22

© OCR 2020

stemup.co.uk

27 A student is investigating the p.d. required to make LEDs light up using the circuit shown in **Fig. 27.1** below.

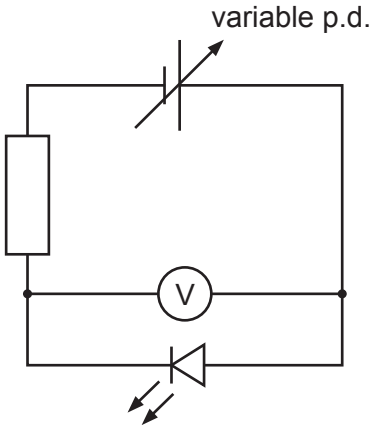

Fig. 27.1

She adjusts the applied p.d. while observing the LED.

She records the p.d. at which the LED just lights up.

She repeats the test with two other LEDs of the same colour.

She repeats the whole procedure for a range of LED colours.

The table below shows her results.

LED Colour	Frequency / $\times 10^{14}$ Hz	P.D. required to light / V			Mean p.d. / V
		1	2	3	
Red	4.05	1.60	1.70	1.65	1.65
Orange	5.00	2.10	2.15	1.90	2.05
Yellow	5.17	2.15	2.30	2.00	2.15
Green	5.83	2.45	2.45	2.30	2.40
Blue	6.25	2.65	2.60	2.55	2.60

(a) Complete the table with the missing mean value. **[1]**

© OCR 2020

(b) **Fig. 27.2** is an incomplete graph of mean p.d. vs. LED frequency.

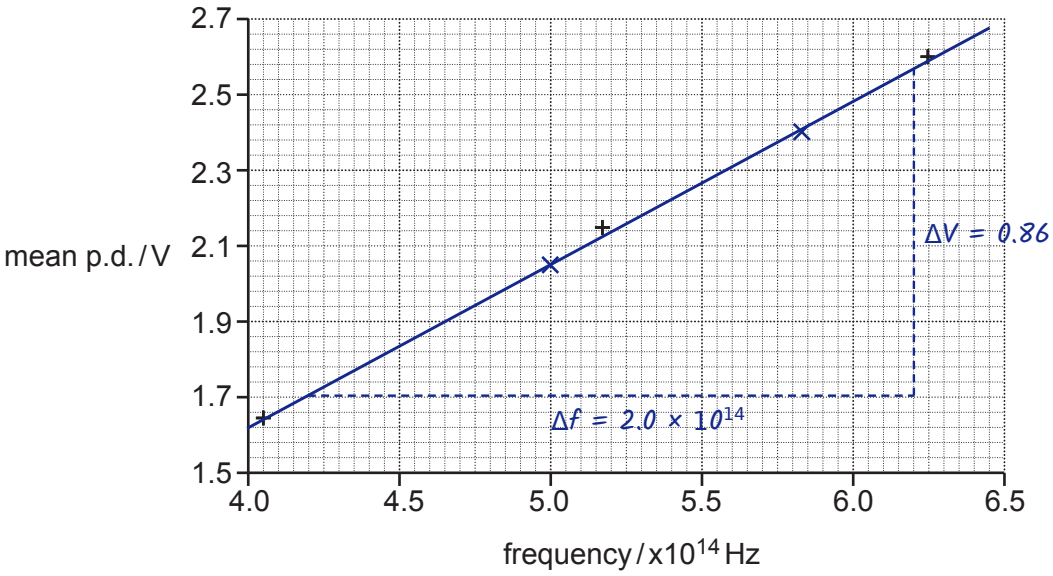

Fig 27.2

(i) Complete the graph of mean p.d. against LED frequency. **[2]**

(ii) Determine the gradient of the graph.

gradient = (2.566 − 1.706) / ((6.2 − 4.2) × 10^{14}) = 0.86 / 2.0 × 10^{14}

gradient = ...4.3 × 10^{-15}..... Vs **[2]**

Each electron that passes through the green LED transfers 2.40 eV of energy.

(c) Convert 2.40 eV into joules.

E = 2.40 × 1.60 × 10^{-19}

energy = ...3.84 × 10^{-19}..... J **[1]**

(d) Show how the gradient can be used to determine a value for the Planck constant.

eV = hf, so V = (h / e) f and gradient = h / e

1 V s = 1.6 × 10^{-19} J s

h = gradient × 1.6 × 10^{-19} = 4.3 × 10^{-15} × 1.6 × 10^{-19}

h = 6.9 × 10^{-34} J s

Planck constant = ...6.9 × 10^{-34}..... Js **[3]**

© OCR 2020

stemup.co.uk

(e) Suggest and explain one reason why the student chose to use two other LEDs of the same colour rather than re-using the same LED for each trial.

LEDs of the same colour may not be identical, and the one in use could be anomalous. Testing three different LEDs and finding an average p.d. improves the accuracy of the value for that colour. **[2]**

The student notes that it is difficult to determine precisely the point where the LED just lights.

(f) Suggest and explain how the student could modify the equipment or procedure to help overcome this difficulty.

Darken the room or view the LED through a black paper tube, to improve the contrast so the first faint glow is easier to see. Also use a potential divider for finer control of the p.d., going from unlit to lit and back to find the turn-on point. **[2]**

END OF QUESTION PAPER

© OCR 2020

ADDITIONAL ANSWER SPACE

If you need extra space use the following lined pages. The question numbers must be clearly shown.

© OCR 2020

© OCR 2020

© OCR 2020

OCR
Oxford Cambridge and RSA

Copyright Information

OCR is committed to seeking permission to reproduce all third-party content that it uses in its assessment materials. OCR has attempted to identify and contact all copyright holders whose work is used in this paper. To avoid the issue of disclosure of answer-related information to candidates, all copyright acknowledgements are reproduced in the OCR Copyright Acknowledgements Booklet. This is produced for each series of examinations and is freely available to download from our public website (www.ocr.org.uk) after the live examination series.

If OCR has unwittingly failed to correctly acknowledge or clear any third-party content in this assessment material, OCR will be happy to correct its mistake at the earliest possible opportunity.

For queries or further information please contact The OCR Copyright Team, The Triangle Building, Shaftesbury Road, Cambridge CB2 8EA.

OCR is part of the Cambridge Assessment Group; Cambridge Assessment is the brand name of University of Cambridge Local Examinations Syndicate (UCLES), which is itself a department of the University of Cambridge.

© OCR 2020