Oxford Cambridge and RSA

Wednesday 21 May 2025 – Afternoon

AS Level Physics B (Advancing Physics)

H157/02 Physics in depth

Time allowed: 1 hour 30 minutes

You must have:
- the Data, Formulae and Relationships Booklet

You can use:
- a scientific or graphical calculator
- a ruler (cm/mm)

Please write clearly in black ink. **Do not write in the barcodes.**

Centre number | | | | | | Candidate number | | | | |

First name(s) _____

Last name _____

INSTRUCTIONS
- Use black ink. You can use an HB pencil, but only for graphs and diagrams.
- Write your answer to each question in the space provided. If you need extra space use the lined page at the end of this booklet. The question numbers must be clearly shown.
- Answer **all** the questions.
- Where appropriate, your answer should be supported with working. Marks might be given for using a correct method, even if your answer is wrong.

INFORMATION
- The total mark for this paper is **70**.
- The marks for each question are shown in brackets **[ ]**.
- Quality of extended response will be assessed in questions marked with an asterisk (*).
- This document has **20** pages.

ADVICE
- Read each question carefully before you start your answer.

© OCR 2025 [601/4744/1]
DC (PQ/CB) 354593/3
OCR is an exempt Charity

Section A

1 A student carries out an experiment to determine the electromotive force (e.m.f.) and the internal resistance of a cell. **Fig. 1.1** shows the circuit the student uses.

Fig. 1.1

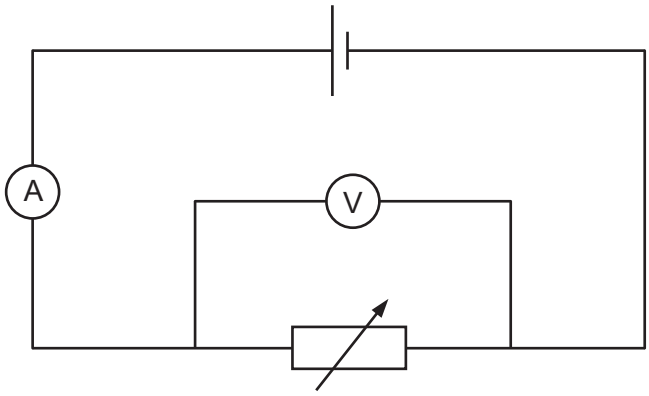

The student changes the resistance of the variable resistor and measures corresponding values of current through and potential difference across the variable resistor.

The graph in **Fig. 1.2** shows the student's results.

Fig. 1.2

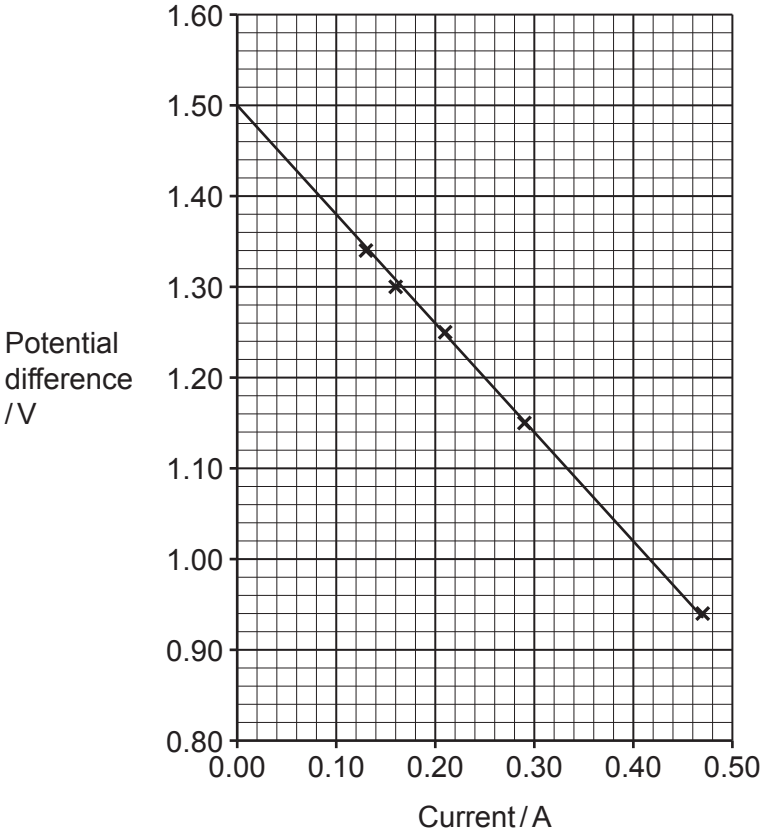

© OCR 2025

(a) The student concludes that the e.m.f. of the cell is 1.5 V and that its internal resistance is 1.2 Ω. Explain how the student reaches these conclusions. Include any relevant calculations.

.....

.....

.....

.....

.....

.....

.....

..... **[4]**

(b)

(i) Show that when the current is 0.40 A the number of electrons passing through the variable resistor each second is 2.5×10^{18}.

[2]

(ii) Calculate the energy transferred by one electron as it travels from one end of the variable resistor to the other when the current is 0.40 A.

Energy transferred = ... J **[3]**

© OCR 2025

2 A student carries out an experiment to verify Newton's 2nd law of motion. **Fig. 2.1** shows equipment used by the student.

Fig. 2.1

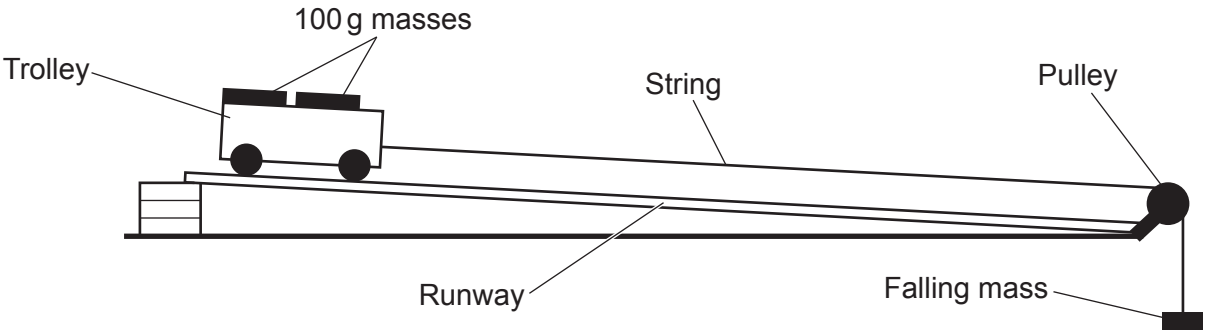

The student follows these instructions:

- Measure the mass of the trolley.
- Place the trolley on the runway without the falling mass and compensate for the friction of the wheels.
- Connect the falling mass to the trolley, and with no masses on the trolley release it from rest at the top of the runway and time how long it takes to travel 1 m with a stopwatch.
- Repeat the experiment two more times and calculate the mean time.
- Repeat the experiment with different numbers of 100 g masses on the trolley.

(a) Explain how the student compensates for the friction of the wheels.

.....

.....

.....

..... **[2]**

(b) The mass of the trolley is 750 g. With 200 g placed on top of it, the mean time taken for the trolley to travel 1.00 m from rest is 2.2 s.
Show that the acceleration of the trolley is about 0.41 m s^{-2}.

[1]

© OCR 2025

(c) The table shows the student's results.

Total mass of trolley / kg	Acceleration / $m\,s^{-2}$
0.750	0.53
0.850	0.45
0.950	0.41
1.050	0.38
1.150	0.33

(i) Perform an arithmetical test to find if these results support Newton's 2nd law of motion. Explain your conclusion.

.....

..... **[2]**

(ii) Describe a graph that the student could draw with these results and explain how the graph would show if the results agreed with Newton's 2nd law of motion.

.....

.....

.....

..... **[2]**

© OCR 2025

3 A student carries out an experiment to determine the Young modulus of copper. The student stretches a long copper wire using the apparatus shown in **Fig. 3.1**.

Fig. 3.1

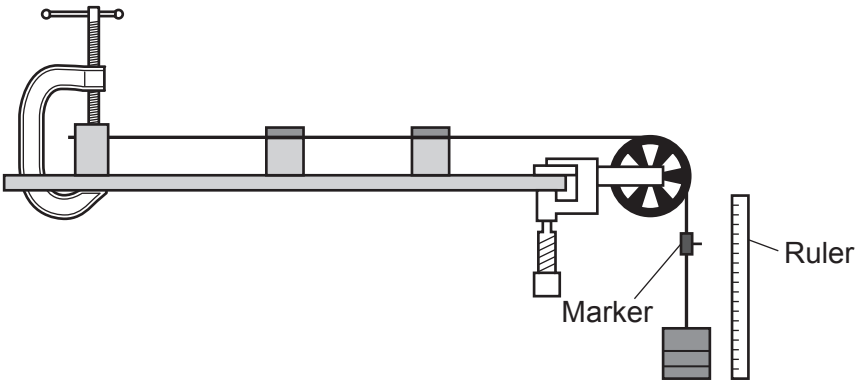

The student uses a micrometer to measure the diameter of the wire, and finds the mean diameter of the wire to be 0.38 mm.

(a) Describe how the student makes the measurements to calculate the mean diameter.

.....

.....

.....

.....

.....

..... **[2]**

(b) The student obtains the following results:

Mean diameter of wire = 0.38 mm

Initial length of wire = 1.500 m

Mass suspended from wire = 2.000 kg

Extension of wire = 2.2 mm

Use these results to find the Young modulus of copper.

Young modulus = ... Pa **[3]**

© OCR 2025

(c) The student adds masses to the wire until it fractures. Copper is a ductile material. Sketch a graph of stress against strain for the copper wire on **Fig. 3.2**.

Fig. 3.2

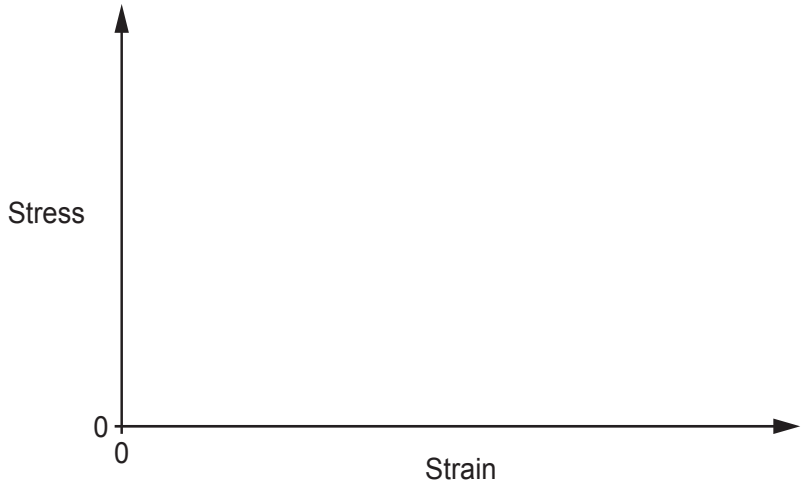

[1]

© OCR 2025

4 **Fig. 4.1** shows apparatus used to determine the acceleration of free fall. A millisecond timer begins timing when the steel ball is released from the electromagnet. The timing stops when the ball breaks open the metal trap door.

Fig. 4.1

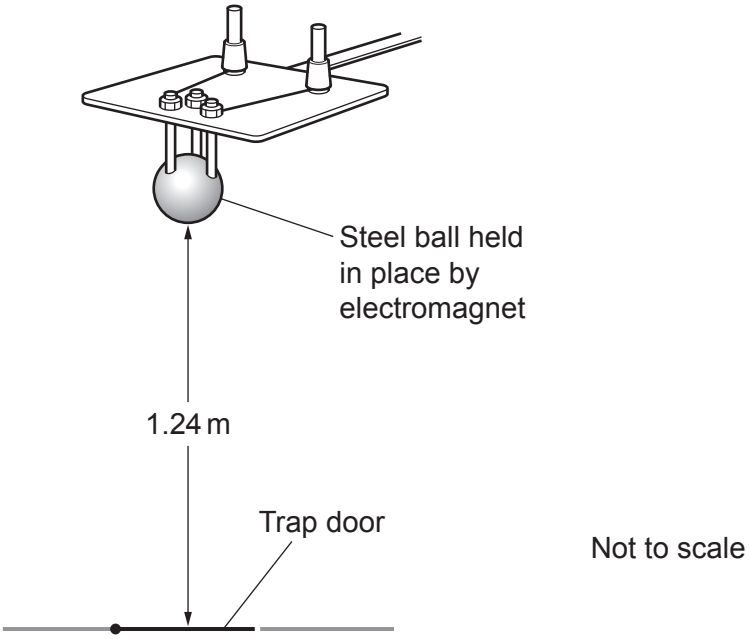

A student makes five measurements and collects the following data:

Drop number	Time / s
1	0.493
2	0.490
3	0.487
4	0.498
5	0.495

The student suggests that the results show a systematic error as well as random uncertainty. Explain this reasoning and identify a likely cause for a systematic error in this experiment. Include calculations in your answer.

.....

.....

..... **[4]**

© OCR 2025

BLANK PAGE

DO NOT WRITE ON THIS PAGE

Section B continues on page 10

© OCR 2025

Section B

5

(a) A manufacturer produces fixed resistors, which it sells in boxes of ten.
A technician checks the values of ten resistors in a box using the circuit shown in **Fig. 5.1**.

Fig. 5.1

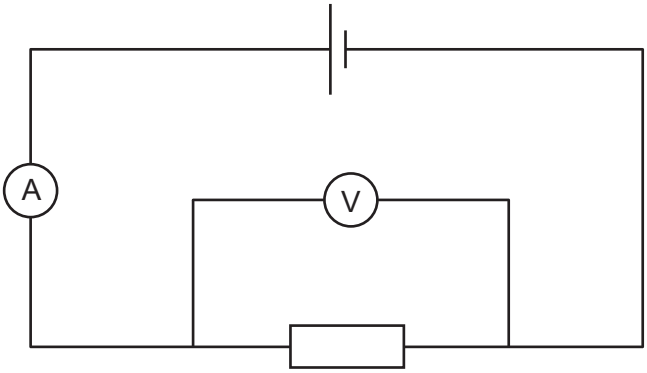

The values of potential difference and current for one resistor are:

$V = 1.10 \pm 0.01\,\text{V}$
$I = 0.26 \pm 0.01\,\text{A}$

All ten resistors in the box are tested in this way. The dot plot in **Fig. 5.2** shows the results.

Fig. 5.2

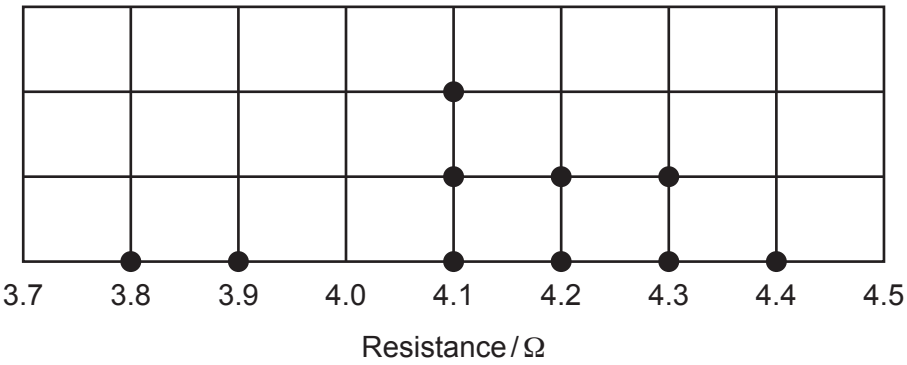

© OCR 2025

Discuss how the value of the resistors in the box should be presented on the label on the box. Perform suitable calculations to support your answer.

.....

.....

.....

.....

.....

.....

.....

..... **[4]**

(b) Nichrome is an alloy containing nickel and chromium that is used to make resistors. Nichrome wire of cross-sectional area $5.9 \times 10^{-8}\,m^2$ is used to make a $4.2\,\Omega$ resistor. The resistivity of nichrome is $1.4 \times 10^{-6}\,\Omega\,m$.

(i) Show that the length of wire needed is about 18 cm.

[2]

(ii) The density of a substance is given by the equation

density (ρ) = mass (m) ÷ volume (V).

The density of nichrome is $8400\,kg\,m^{-3}$.

The specific thermal capacity of nichrome is $450\,J\,kg^{-1}\,K^{-1}$.

The resistor is connected into a circuit so that the potential difference across it is 1.5 V.

Calculate the maximum temperature rise, $\Delta\theta$ in the resistor when the circuit is switched on for one second.

$\Delta\theta$ = ... °C **[4]**

© OCR 2025

(iii) A resistor of the same value can be made using a thicker wire of the same nichrome alloy. Explain the advantages and disadvantages of using thicker wire to make the resistor.

.....

.....

.....

.....

.....

.....

.....

..... **[4]**

© OCR 2025

6 A student investigates how the resistance of a light dependent resistor (LDR) varies with light level. The student uses the apparatus shown in **Fig. 6.1**.

Fig. 6.1

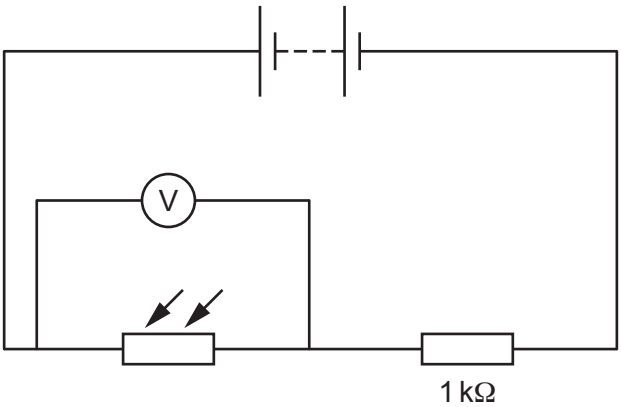

The battery has an e.m.f. of 6.0 V and negligible internal resistance. The voltmeter has a very high resistance compared to the LDR at any light level.

The student varies the light level incident on the LDR by varying the distance between the LDR and a lamp between 0.10 and 0.20 metres. The student measures and records the potential difference across the LDR, V_{LDR}, at different distances.

The light level L provided by the lamp varies with the distance x from the lamp according to the equation $L = \frac{0.80}{x^2}$ where L is in lux and x is in metres.

Fig. 6.2 shows the student's results.

© OCR 2025

Fig. 6.2

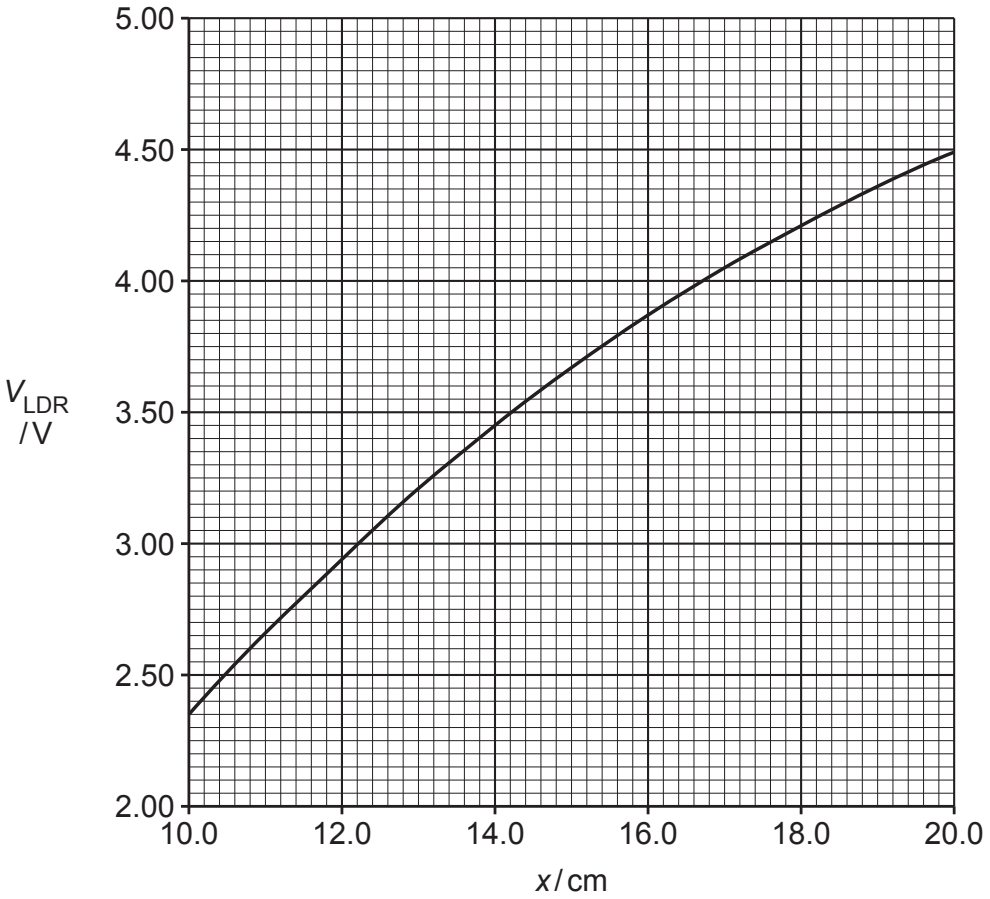

(a)* Explain how the student can find the relationship between the resistance of the LDR and the light level using data from **Fig. 6.2**. Use values when the voltage is 3.00 V and 4.00 V as examples. Sketch a graph of the resistance of the LDR against light level on the grid in **Fig. 6.3**.

.....

.....

.....

.....

.....

.....

.....

.....

.....

.....

.....

© OCR 2025

Fig. 6.3

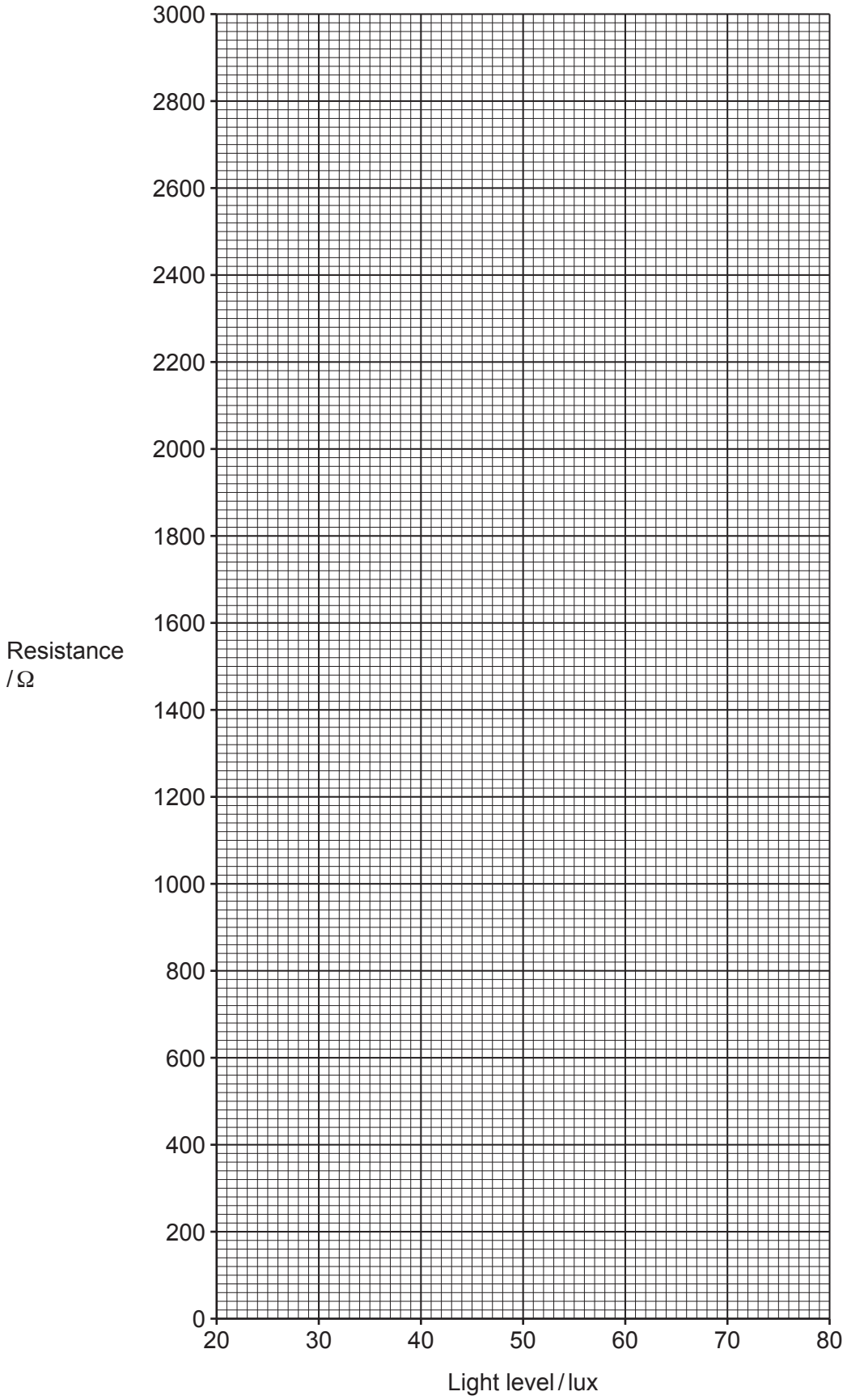

[6]

© OCR 2025

(b) Explain why the voltmeter used in the experiment should have a very high resistance.

.....

.....

.....

.....

.....

..... **[3]**

(c) **Fig. 6.4** shows how the circuit in **Fig. 6.1** can be adapted and used as part of a burglar alarm.

Fig. 6.4

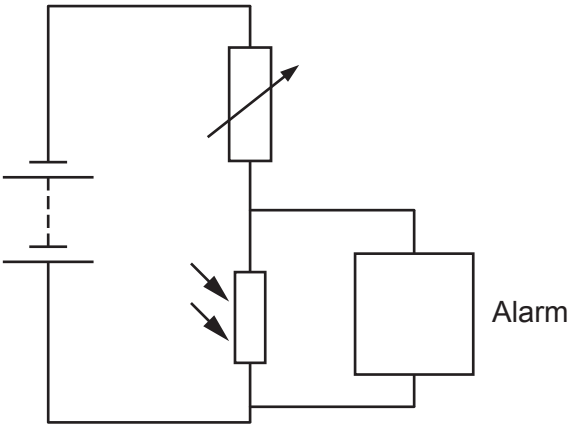

The alarm switches on when the burglar's torch shines on the LDR.

If the alarm is too sensitive it can be switched on by small increases in the ambient light level.

Explain how the sensitivity of the alarm is adjusted and state the factors that need to be considered when setting the sensitivity.

.....

.....

.....

.....

.....

..... **[3]**

© OCR 2025

Section C

7 A model rocket is propelled vertically upwards by a solid fuel rocket engine.
Before it is launched the total mass of the rocket and the fuel is 0.500 kg.
When it is ignited the fuel burns at a rate 0.020 kg s^{-1}, producing exhaust gases at the same rate.
The thrust produced by the rocket engine remains constant at 7.00 N for three seconds. At this time the fuel runs out.

(a)
(i) Calculate the speed of the exhaust gases from the rocket.

speed = ... m s^{-1} **[3]**

(ii) Show that the acceleration immediately after the ignition of the fuel is about 4.2 m s^{-2}.

[2]

(iii) Explain why the acceleration of the rocket increases during the first three seconds after it is launched.

.....

.....

.....

..... **[2]**

© OCR 2025

(b) An iterative model can be used to analyse the motion of the rocket and determine approximate values of velocity at different times. The process used is to calculate each value of v from the one before.
In this model it is assumed that the resultant force acting on the rocket remains constant at 2.00 N in order to simplify the calculations.
The table shows the values of the mass, m, the resultant force, F, the acceleration, a, and the velocity, v, at 0.50 second intervals, Δt, after the fuel is ignited.

In row 1, time, $t = 0$ s, and all the other variables have their starting values.

In row 2, $t = 0.50$ s and new v = previous v + previous $a \times \Delta t = 0 + 4.00 \times 0.50 = 2.00\,\text{m s}^{-1}$.

In the other rows the values of v are calculated in the same way as in row 2.

t / s	m / kg	F / N	a / m s^{-2}	v / m s^{-1}
0.00	0.500	2.00	4.00	0.00
0.50	0.490	2.00	4.08	2.00
1.00	0.480	2.00	4.17	4.04
1.50	0.470	2.00	4.26	6.13
2.00	0.460	2.00		8.26
2.50	0.450	2.00		
3.00	0.440	2.00		

(i) Use the m and F values to calculate the missing values of a and write them in the table. **[1]**

(ii) Calculate the missing values of v using the time and previous value of a and write them in the table. **[2]**

(iii) State and explain the effect of making the time intervals between iterations shorter on the calculated velocity at 3.00 s.

.....

.....

.....

..... **[2]**

© OCR 2025

(c)* Space engineers are planning a mission to send a spacecraft into interstellar space.
The engineers are considering two propulsion systems for the spacecraft.
A conventional chemical rocket engine uses 50 kg fuel to produce 400 N thrust for 300 s.
An ion thruster uses 50 kg xenon propellant to produce 0.050 N thrust for 200 days.

Compare the advantages and disadvantages of a conventional chemical rocket and an ion thruster and comment on the suitability of each one for the interstellar mission.

You should include calculations in your answer.

.....

.....

.....

.....

.....

.....

.....

.....

.....

.....

.....

..... **[6]**

END OF QUESTION PAPER

© OCR 2025

EXTRA ANSWER SPACE

If you need extra space use this lined page. You must write the question numbers clearly in the margin.

OCR
Oxford Cambridge and RSA

Copyright Information

OCR is committed to seeking permission to reproduce all third-party content that it uses in its assessment materials. OCR has attempted to identify and contact all copyright holders whose work is used in this paper. To avoid the issue of disclosure of answer-related information to candidates, all copyright acknowledgements are reproduced in the OCR Copyright Acknowledgements Booklet. This is produced for each series of examinations and is freely available to download from our public website (www.ocr.org.uk) after the live examination series.

If OCR has unwittingly failed to correctly acknowledge or clear any third-party content in this assessment material, OCR will be happy to correct its mistake at the earliest possible opportunity.

For queries or further information please contact The OCR Copyright Team, The Triangle Building, Shaftesbury Road, Cambridge CB2 8EA.

OCR is part of Cambridge University Press & Assessment, which is itself a department of the University of Cambridge.

© OCR 2025