Oxford Cambridge and RSA

Wednesday 15 May 2024 – Morning

AS Level Physics B (Advancing Physics)

H157/01 Foundations of physics

Time allowed: 1 hour 30 minutes

You must have:
- the Data, Formulae and Relationships Booklet

You can use:
- a scientific or graphical calculator
- a ruler (cm/mm)

Please write clearly in black ink. **Do not write in the barcodes.**

Centre number | | | | | | Candidate number | | | | |

First name(s) _____

Last name _____

INSTRUCTIONS
- Use black ink. You can use an HB pencil, but only for graphs and diagrams.
- Write your answer to each question in the space provided. If you need extra space use the lined pages at the end of this booklet. The question numbers must be clearly shown.
- Answer **all** the questions.
- Where appropriate, your answer should be supported with working. Marks might be given for using a correct method, even if your answer is wrong.

INFORMATION
- The total mark for this paper is **70**.
- The marks for each question are shown in brackets **[ ]**.
- This document has **28** pages.

ADVICE
- Read each question carefully before you start your answer.

© OCR 2024 [601/4744/1]
DC (PQ/SW) 340812/5
OCR is an exempt Charity

Section A

You should spend a maximum of **25 minutes** on this section.

Write your answer to each question in the box provided.

1 Which device is most accurate for measuring the time taken for a glider to travel a short distance along an air track?

A Analogue stopwatch

B Digital stopwatch

C Light gates

D Metre ruler

Your answer ☐

[1]

2 The circuit symbol for a fuse is:

A 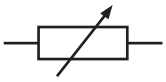

B 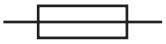

C 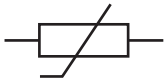

D 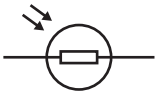

Your answer ☐

[1]

© OCR 2024

3 The diagram shows the arrangement of particles in a metal.

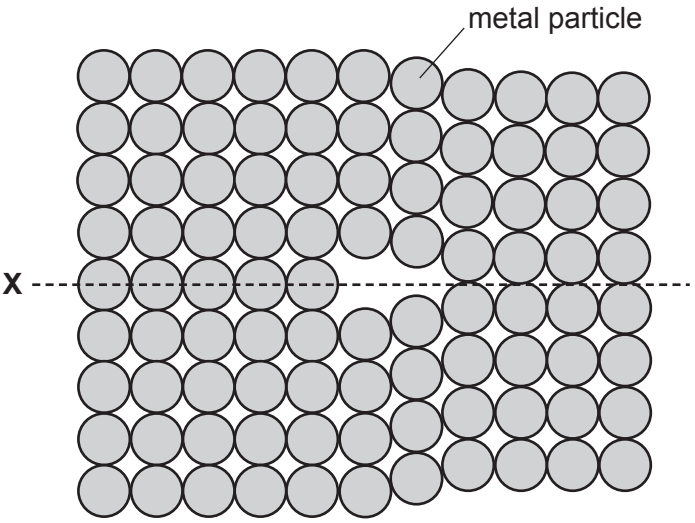

The structure marked **X** is best described as:

A A dislocation

B A fracture

C Chain entanglement

D Slip

Your answer ☐

[1]

4 A spacecraft takes an image of Saturn's moon Enceladus. The image of the full moon fills the imaging sensor which has diameter 5 mm. The moon's diameter is 500 km.

The linear magnification is of order:

A 10^{-8}

B 10^{-4}

C 10^{4}

D 10^{8}

Your answer ☐

[1]

© OCR 2024

5 An automatic number plate recognition (ANPR) system identifies cars by reading the number plate from a camera image.

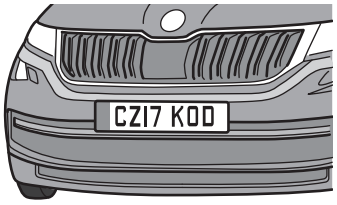

Which image processing technique can be used to locate the number plate in this image?

A Applying false colour

B Changing contrast

C Edge detection

D Removing noise

Your answer ☐

[1]

6 What is the kinetic energy of a car of mass 500 kg travelling at 80 km/h?

A 5.6 kJ

B 40 kJ

C 0.12 MJ

D 1.6 MJ

Your answer ☐

[1]

© OCR 2024

7 A student is using a microwave transmitter and receiver as shown in the diagram.

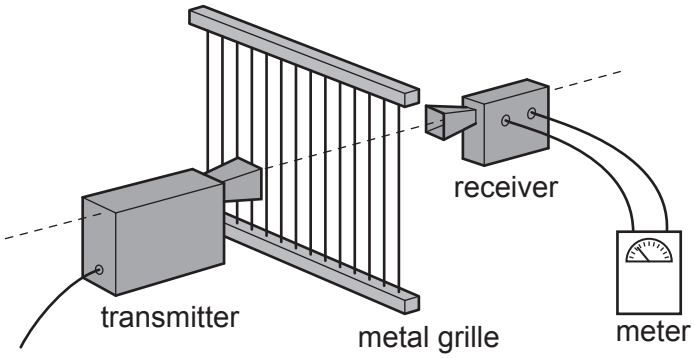

The student notices the reading on the meter changes as the metal grille is rotated about the direction of the microwave beam.
This observation provides evidence that microwaves can be:

A Diffracted

B Polarised

C Reflected

D Refracted

Your answer ☐

[1]

8 Which value would be a suitable estimate for the rate of increase in height of a mature, growing tree?

A 0.5 m per month

B 0.5 m per year

C 10 cm per second

D 10 cm per week

Your answer ☐

[1]

© OCR 2024

9 What is the SI unit of power?

A hertz

B joule

C volt

D watt

Your answer ☐

[1]

10 A student approximates the sine of a small angle in a diffraction experiment.

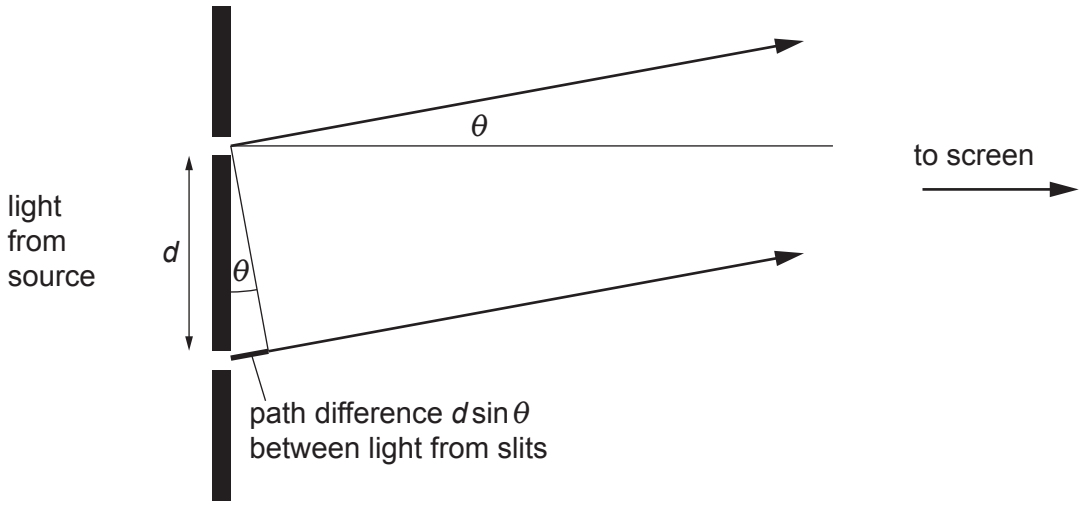

When $\theta = 1.5°$ then $\sin(\theta)$ is approximately:

A $\frac{1.5}{180\pi}$

B $\frac{1.5\pi}{180}$

C $\frac{180}{1.5\pi}$

D $1.5 \times \frac{180}{\pi}$

Your answer ☐

[1]

© OCR 2024

11 Newton's Third Law refers to a pair of forces.

What properties do those forces have?

	Magnitude	Direction	Acting On
A	Different	Same	One object
B	Different	Same	Two different objects
C	Same	Opposite	One object
D	Same	Opposite	Two different objects

Your answer ☐

[1]

12 The diagram shows an example of Kirchhoff's First Law for the currents at a junction.

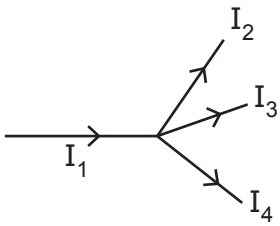

$$I_1 = I_2 + I_3 + I_4$$

The law describes the conservation of:

A Atoms

B Charge

C Energy

D Potential difference

Your answer ☐

[1]

© OCR 2024

13 The diagram shows a sound wave displayed on an oscilloscope screen.

The oscilloscope timebase is set to 1 ms / div.

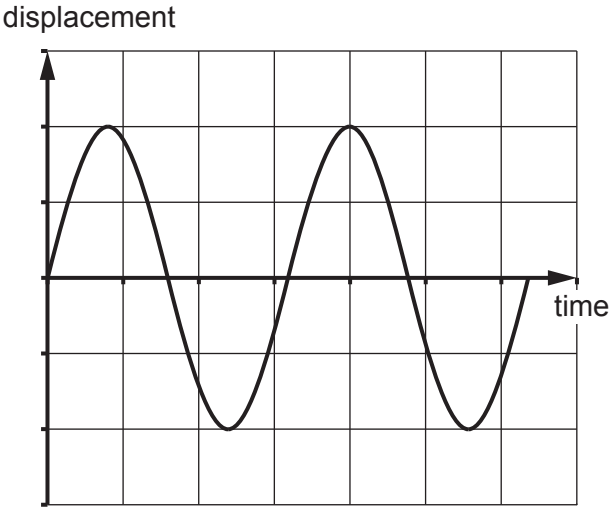

The frequency of the sound wave is approximately:

A 155 Hz

B 320 Hz

C 500 Hz

D 625 Hz

Your answer ☐

[1]

14 Evidence that light energy is emitted as quanta comes from:

A Electron diffraction

B Millikan's oil drop experiment

C Partial reflection

D Photoelectric effect

Your answer ☐

[1]

© OCR 2024

15 An electrical motor with output power 5.0 kW raises a load of mass 250 kg through a height of 5.0 m.

What is the minimum time this could take?

A 2.5 s

B 5 s

C 50 s

D 250 s

Your answer ☐

[1]

16 The refractive index of a transparent plastic material is:

A $\dfrac{1}{\text{speed of light in the plastic}}$

B $\dfrac{\text{speed of light in a vacuum}}{\text{speed of light in the plastic}}$

C $\dfrac{1}{\sin\,(\text{speed of light in the plastic})}$

D $\dfrac{\text{speed of light in the plastic}}{\text{speed of light in a vacuum}}$

Your answer ☐

[1]

17 In an experiment to determine the acceleration due to gravity, g, a ball bearing takes time t to fall distance s. The percentage uncertainty in each measurement is 5%.

A student calculates the acceleration due to gravity, $g = \dfrac{2s}{t^2}$

The percentage uncertainty in their answer is:

A 0.5%

B 5%

C 10%

D 15%

Your answer ☐

[1]

© OCR 2024

18 Which diagram shows the addition of three forces that have no resultant force?

A

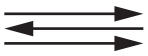

B

C

D

Your answer ☐

[1]

19 Which graph shows the relationship between the distance, *s*, fallen by an object and its final speed, *v*, before hitting the ground?

Ignore the effects of air resistance.

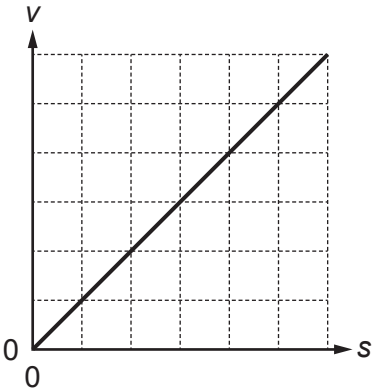

A

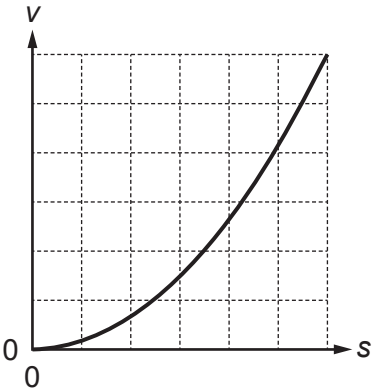

B

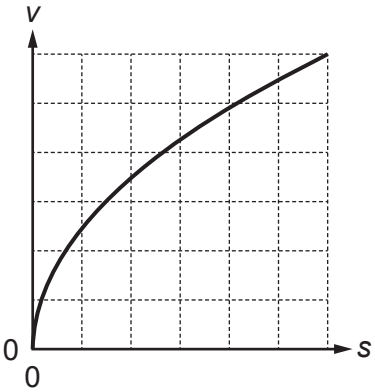

C

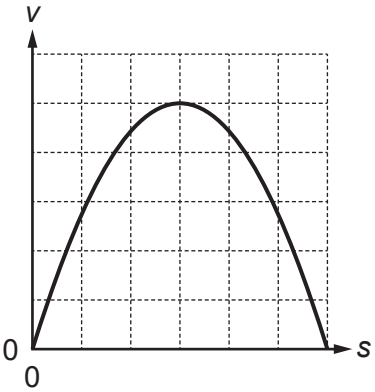

D

Your answer ☐

[1]

© OCR 2024

20 Two wires **P** and **Q** are made from different metals.
Wire **P** has double the diameter and double the unstretched length of wire **Q**. Equal weights are suspended from both wires and both wires extend by the same amount.
The metal of wire **Q** has Young modulus, Y.

What is the Young modulus of the metal of wire **P**?

A $\frac{Y}{2}$

B Y

C $2Y$

D $4Y$

Your answer ☐

[1]

© OCR 2024

Section B

21

(a)

(i) Complete the sentence to give the **definition** of current.

Put a (ring) around each correct option.

Current is the flow of	charged particles
	free electrons
	mobile carriers

[1]

(ii) Two electrical components with different resistance are connected together so that the same current flows through them both.

Complete the sentence.

The two components are connected in ..... .

[1]

A potential divider circuit is used in a temperature sensor.

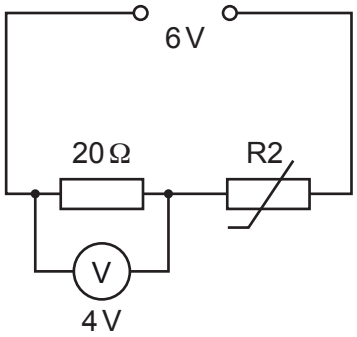

(b) State the energy transferred in joules when 1C of charge flows through the 20 Ω resistor.

Energy = ... J **[1]**

(c) Determine the resistance of component R2.

Resistance = ... Ω **[2]**

© OCR 2024

22 An electronics engineer is building a device to convert analogue signals to digital.
Fig. 22.1a shows an analogue signal and **Fig. 22.1b** shows its conversion to a digital signal by sampling.

Fig. 22.1a

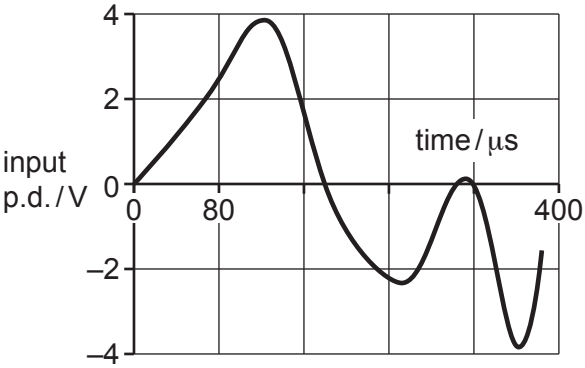

Fig. 22.1b

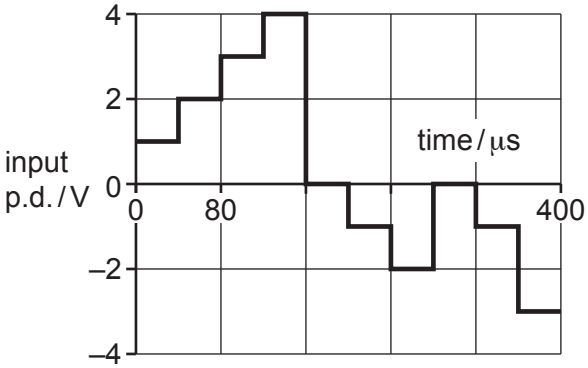

(a) State, for the digital signal in **Fig. 22.1b**:

(i) the number of levels

Number of levels = ... **[1]**

(ii) the number of bits required to encode the signal

Number of bits = ... **[1]**

(iii) the time between samples.

Time = ...μs **[1]**

(b) The quality of the digital signal will be acceptable if the minimum sampling rule is met:

minimum rate of sampling > 2 × maximum frequency of signal

Show whether this rule is met for the signal being converted in **Fig. 22.1**.

The maximum frequency in the analogue signal is 12 kHz.

[2]

© OCR 2024

23 Two students are investigating stationary waves.

A tuning fork is struck and held above a glass tube partially in water as shown in **Fig. 23.1**.

Fig. 23.1

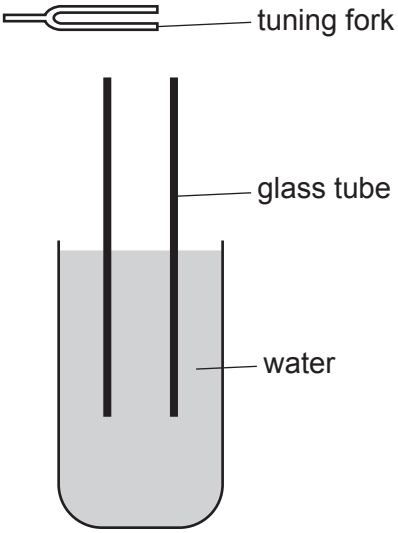

(a) Explain how stationary waves are formed in the tube.

Do **not** include a description of the formation of nodes and antinodes.

.....

.....

.....

..... **[2]**

© OCR 2024

(b) A tuning fork is placed above the opening of the tube.

A loud sound is heard when 33 cm of the tube is above the water surface (**Fig. 23.2a**).

The tube is pulled upwards out of the water until a loud sound is heard again.

This time 100 cm of the tube is above the water surface (**Fig. 23.2b**).

Fig. 23.2a

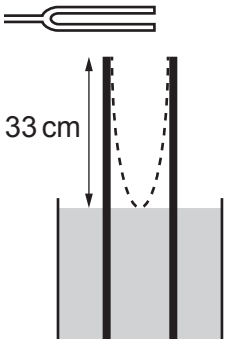

Fig. 23.2b

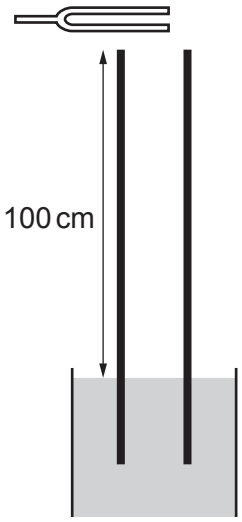

Fig. 23.2a shows the standing wave pattern (dotted lines) for the first loud sound.

Complete the diagram in **Fig. 23.2b** to show the standing wave pattern for the second loud sound. **[1]**

(c) The students use their measurements to calculate the speed of sound in air.

They find it hard to agree the position where the loudest sound is heard.

Suggest and explain how they can improve their experiment to obtain a more precise value for the speed of sound in air.

Suggestion .....

.....

Explanation .....

.....

.....

[2]

© OCR 2024

24 An ion engine is a proposed type of space rocket propulsion.

Fig. 24.1 shows an ion-engine rocket in space. The engine emits charged xenon particles that have been accelerated to high speed.

Fig. 24.1

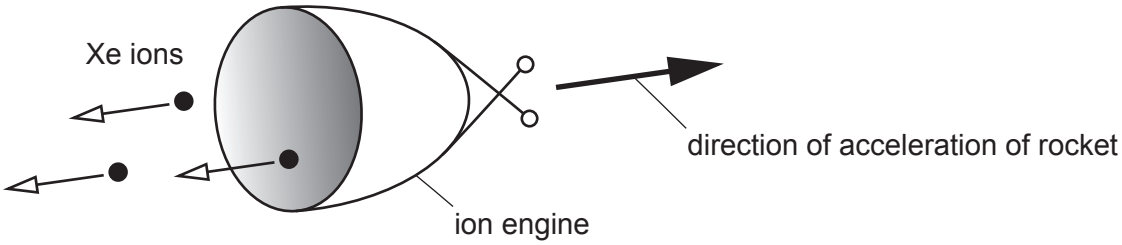

(a) The rocket is stationary and emits a xenon ion.

Explain why the rocket accelerates in the direction shown in **Fig 24.1**.

.....

.....

.....

.....

.....

..... **[2]**

(b) The mass of 6.0×10^{23} xenon ions is 131 g.

Calculate the momentum of a xenon ion emitted at a speed of $40\,\text{km}\,\text{s}^{-1}$.
State the units.

Momentum = ... Units = ... **[3]**

© OCR 2024

Section C

25 Molly is investigating the properties of copper.

She sets up the apparatus shown in **Fig. 25.1** to determine the Young modulus for copper.

Fig. 25.1

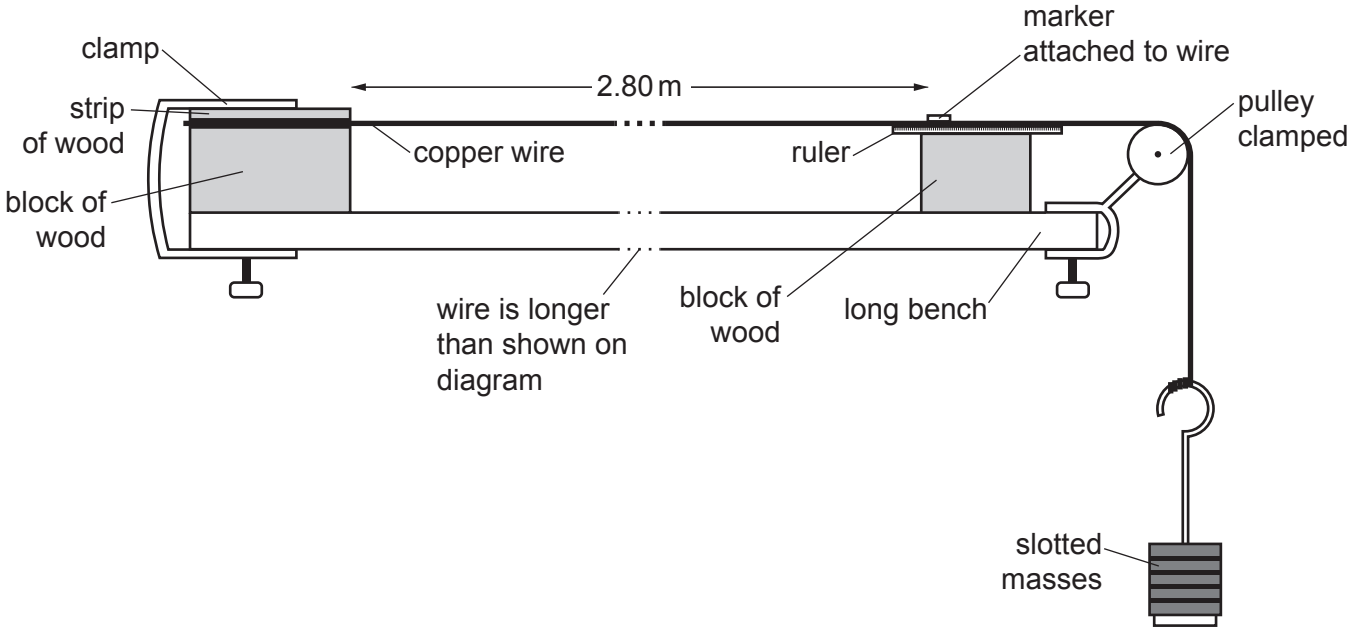

(a) Molly's teacher has asked her to plan how to carry out her investigation safely.

Suggest **two** hazards from using the apparatus shown in **Fig. 25.1**.

For each hazard, suggest a safety precaution Molly can take to work more safely.

Hazard .....

Precaution .....

.....

Hazard .....

Precaution .....

.....

[4]

© OCR 2024

(b) Molly chooses a wire with diameter 0.22 mm.

Calculate the cross-sectional area of the wire.

Assume it has uniform, circular cross-section.

Cross-sectional area = ... m^2 **[2]**

(c) Molly plots her results as a graph of extension against force as shown in **Fig. 25.2**.

Fig. 25.2

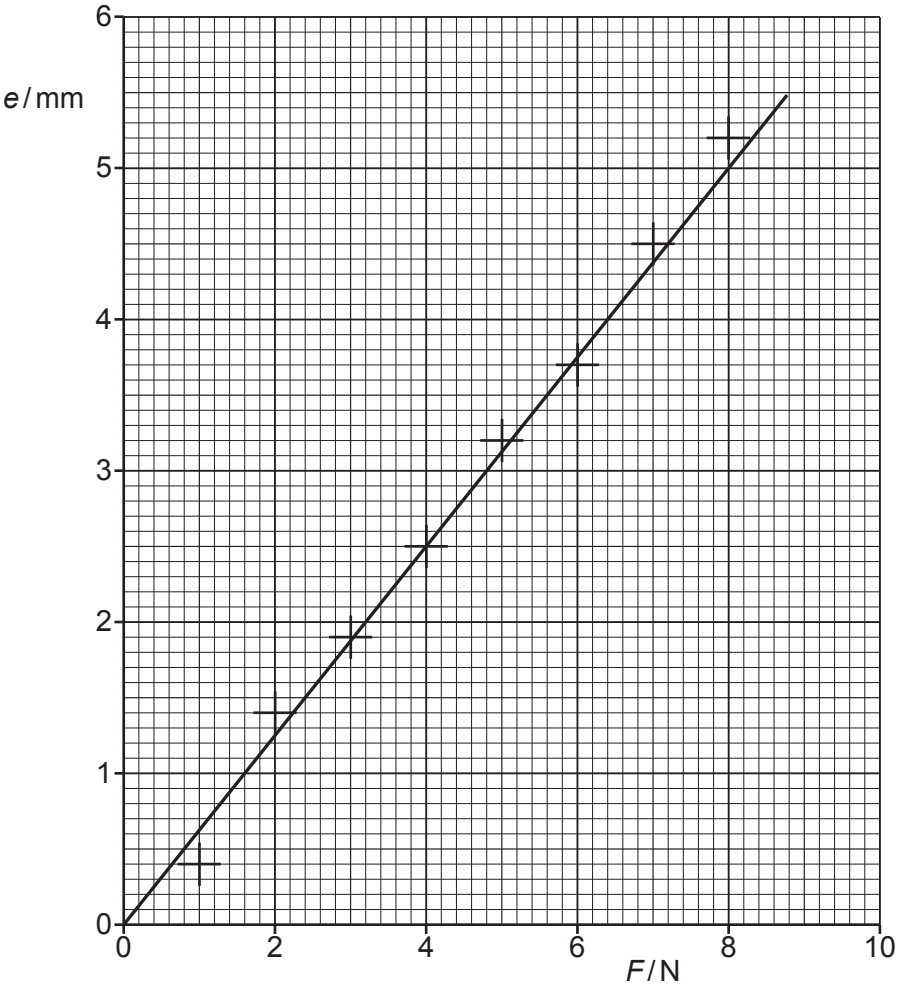

© OCR 2024

(i) Complete Molly's calculation to determine the Young modulus of copper.

Young modulus $= \dfrac{Fl}{eA}$

$= \dfrac{7.37 \times 10^{7}}{\text{gradient}}$

$=$ _____

Young modulus = ... GPa **[2]**

(ii) Describe what the area under the graph represents.

.....

.....

..... **[2]**

© OCR 2024

BLANK PAGE

PLEASE DO NOT WRITE ON THIS PAGE

© OCR 2024

26 A teacher is demonstrating the effect of internal resistance on the current in a circuit.

The experimental arrangement is shown in **Fig. 26**.

Fig. 26

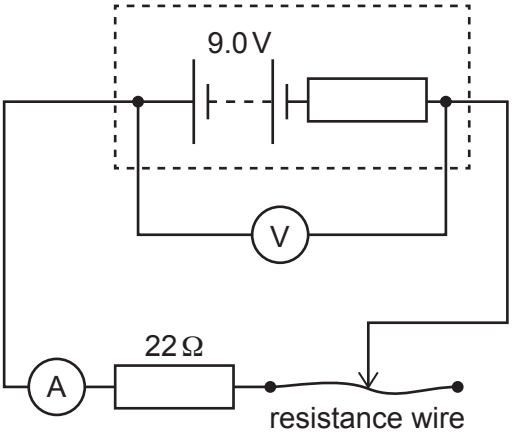

(a) Identify the independent variable, the dependent variable and the most significant variable that must be controlled in this experiment.

Tick **one** box **in each column of the table**.

	Independent	**Dependent**	**Control**
Temperature of wire			
Fixed resistor value			
Length of wire in circuit			
E.m.f. of cell			
Terminal p.d. of cell			

[3]

© OCR 2024

(b) The teacher's measurements are shown in the table below.

Length / cm	Terminal p.d. / V	Current / mA	Internal Resistance / Ω
30	8.64	297	1.212
45	8.68	266	
60	8.71	241	1.203
75	8.74	220	1.182
90	8.76	203	1.182
105	8.78	188	1.170
120	8.79	175	1.180

The teacher calculated the internal resistance for each measurement using the equation:

$$V = \varepsilon - Ir$$

Calculate the internal resistance value for the 45 cm wire.

Internal resistance = ... Ω **[1]**

(c) Two of the teacher's students are discussing the uncertainty in the mean value of the internal resistance.

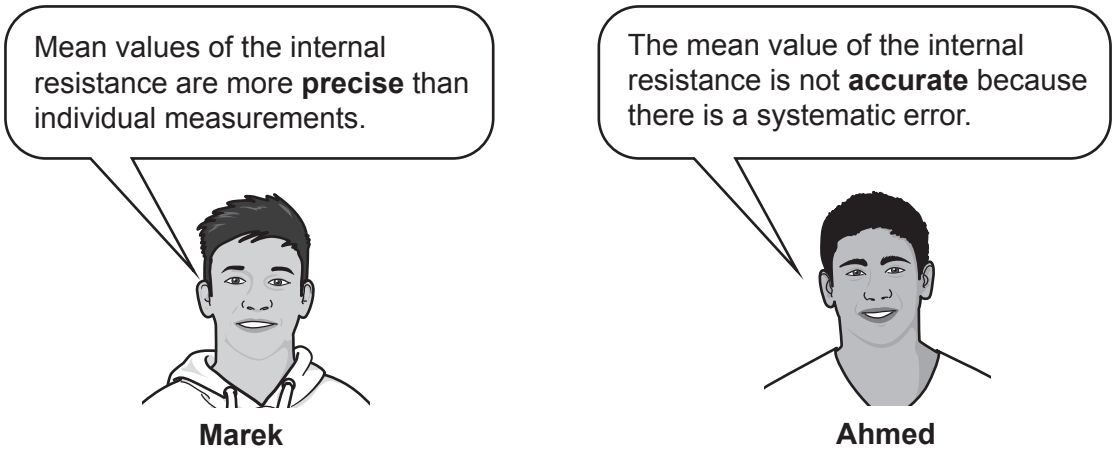

© OCR 2024

Explain how both students have correctly used the terms **accurate** and **precise**.

.....

.....

.....

.....

..... **[2]**

(d) Calculate the resistivity of the resistance wire.

Use data from the table of results for 120 cm of wire.

The wire has cross-sectional area $2.84 \times 10^{-8}\,m^2$.

resistivity = ... Ω m **[4]**

(e) The 22 Ω resistor is replaced with Component X and the experiment is repeated.

The sketch graph below shows the p.d. across Component X against current.

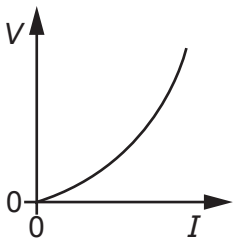

Suggest what Component X might be.

..... **[1]**

© OCR 2024

BLANK PAGE

PLEASE DO NOT WRITE ON THIS PAGE

© OCR 2024

27 A DVD stores video data as marks in grooves that spiral around the disc as shown in **Fig. 27.1a**.

After the shiny coating is removed from the disc, the grooves in the transparent plastic can be used as a diffraction grating as shown in **Fig. 27.1b**.

Fig. 27.1a **Fig. 27.1b**

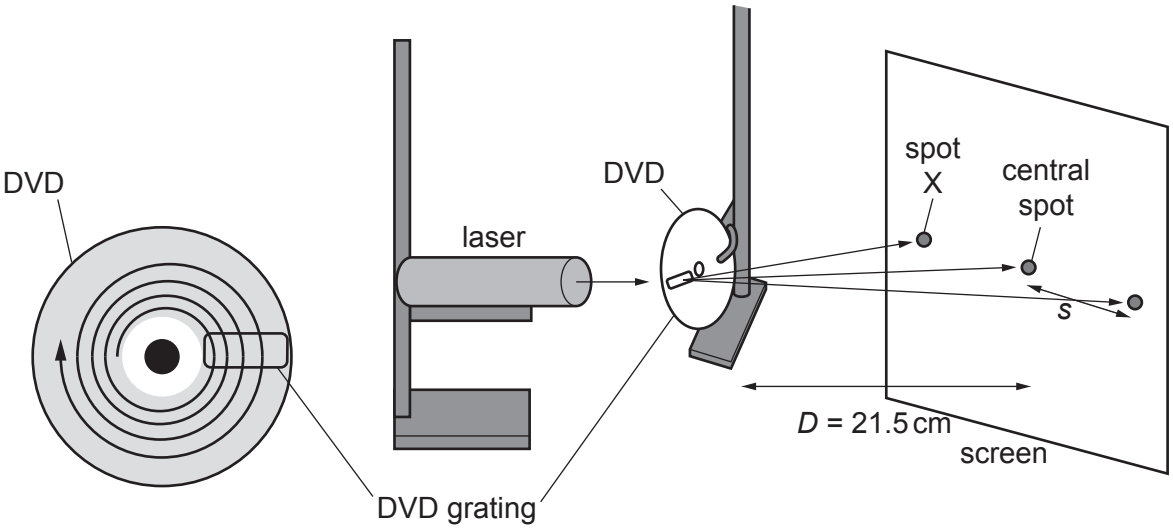

The diagram shows the centre and first-order diffraction maxima (bright spots) in an experiment to measure the wavelength of laser light using a DVD.

(a) Complete the sentence:

At spot X, the ..... between waves from each part of the grating is one wavelength. **[1]**

© OCR 2024

(b) There are 13 850 lines per cm across the DVD.

Determine the separation, d, between the lines on the DVD.

Write your answer in metres.

Separation d = ... m **[1]**

(c) Eight different students measured the distance, s, with a ruler and recorded the results in a dot-plot.

		•		
		•		
		•	•	
	•	•	•	•
distance, s / cm	43.0	43.2	43.3	44.1

The measurement at 44.1 cm is an outlier.

Suggest a reason for this outlier.

.....

..... **[1]**

(d) One student suggests approximating the angle θ, between the centre and an outer spot on the screen using:

$$\theta \sim \frac{s}{D}$$

State why this is **not** a good approximation in this case.

.....

..... **[1]**

© OCR 2024

(e) **Fig. 27.1c** shows the experiment viewed from above.

Fig. 27.1c

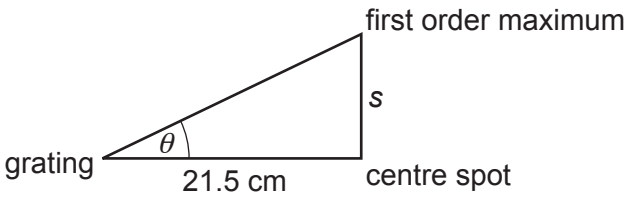

Show that the first-order maximum occurs at an angle of about 64°

Choose a suitable value for *s* from the dot-plot.

[1]

(f) Calculate the wavelength of the laser light.

Use the equation for the first-order diffraction maximum: $\lambda = d\sin\theta$

Wavelength = ... nm **[2]**

(g) The wavelength calculation uses the measurements of *s*, *D* and *d*.

D was measured once using a metre ruler.

Explain why taking more measurements of *s* will **not** reduce the percentage uncertainty in the calculated value for the wavelength.

.....

.....

.....

..... **[2]**

END OF QUESTION PAPER

© OCR 2024

EXTRA ANSWER SPACE

If you need extra space use this lined page. You must write the question numbers clearly in the margin.

OCR
Oxford Cambridge and RSA

Copyright Information

OCR is committed to seeking permission to reproduce all third-party content that it uses in its assessment materials. OCR has attempted to identify and contact all copyright holders whose work is used in this paper. To avoid the issue of disclosure of answer-related information to candidates, all copyright acknowledgements are reproduced in the OCR Copyright Acknowledgements Booklet. This is produced for each series of examinations and is freely available to download from our public website (www.ocr.org.uk) after the live examination series.

If OCR has unwittingly failed to correctly acknowledge or clear any third-party content in this assessment material, OCR will be happy to correct its mistake at the earliest possible opportunity.

For queries or further information please contact The OCR Copyright Team, The Triangle Building, Shaftesbury Road, Cambridge CB2 8EA.

OCR is part of Cambridge University Press & Assessment, which is itself a department of the University of Cambridge.

© OCR 2024