Oxford Cambridge and RSA

Wednesday 17 May 2023 – Morning

AS Level Physics B (Advancing Physics)

H157/01 Foundations of physics

Time allowed: 1 hour 30 minutes

You must have:
- the Data, Formulae and Relationships Booklet

You can use:
- a scientific or graphical calculator
- a ruler (cm/mm)

Please write clearly in black ink. **Do not write in the barcodes.**

Centre number | | | | | | Candidate number | | | | |

First name(s) _____

Last name StemUp Model Solution

INSTRUCTIONS
- Use black ink. You can use an HB pencil, but only for graphs and diagrams.
- Write your answer to each question in the space provided. If you need extra space use the lined pages at the end of this booklet. The question numbers must be clearly shown.
- Answer **all** the questions.
- Where appropriate, your answer should be supported with working. Marks might be given for using a correct method, even if your answer is wrong.

INFORMATION
- The total mark for this paper is **70**.
- The marks for each question are shown in brackets **[ ]**.
- This document has **24** pages.

ADVICE
- Read each question carefully before you start your answer.

© OCR 2023 [601/4744/1]
DC (PQ/FC) 320132/3
OCR is an exempt Charity

stemup.co.uk

Section A

You should spend a maximum of **25 minutes** on this section.

Write your answer to each question in the box provided.

1 What defines a weak material?

A A low elastic limit

B A low fracture stress

C A low yield stress

D A low Young modulus

Your answer B

[1]

2 A sound wave has frequency 440 Hz. The speed of sound in air is 330 m s^{-1}. The wavelength of the sound wave is:

A 75 cm

B 125 cm

C 1.45 m

D 75 m

Your answer A

[1]

© OCR 2023

Use the circuit diagram to answer questions **3** and **4**.

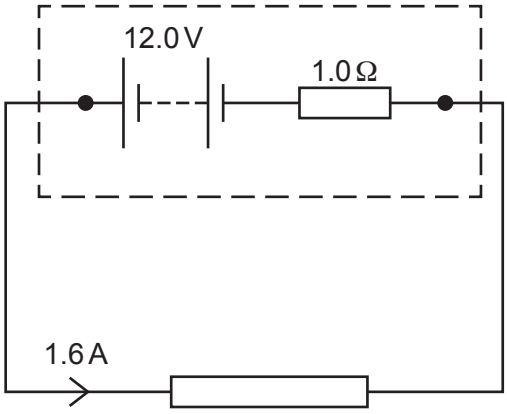

3 The emf of the cell is:

A 1.6 V

B 10.4 V

C 12.0 V

D 13.6 V

Your answer C

[1]

4 The power dissipated in the internal resistance is:

A 2.56 J

B 2.56 W

C 19.2 J

D 19.2 W

Your answer B

[1]

© OCR 2023

stemup.co.uk

5 A lorry and a truck are in a collision. The mass and speed of each, before the collision, are shown on the diagram.

What is the total momentum of the lorry and truck?

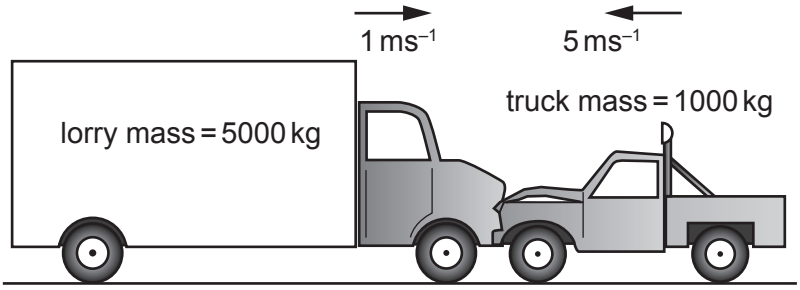

A $0\,\text{kg m s}^{-1}$

B $10\,\text{kg m s}^{-1}$

C $10\,000\,\text{kg m s}^{-1}$ to the left

D $10\,000\,\text{kg m s}^{-1}$ to the right

Your answer A

[1]

6 A single electron passes through a cell of emf 3 V, then through an LED where a single photon is emitted.

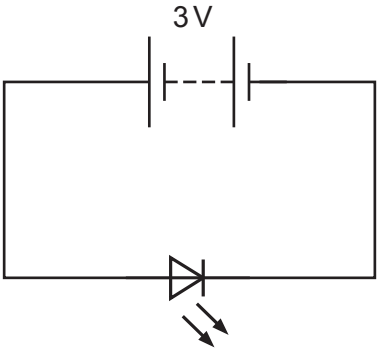

The frequency, f, of the emitted photon can be expressed in terms of the electron charge, e, and the Planck constant, h, as:

A $f = \dfrac{e}{3h}$

B $f = \dfrac{h}{3e}$

C $f = \dfrac{3e}{h}$

D $f = \dfrac{3h}{e}$

Your answer C

[1]

© OCR 2023

7 In a plane-polarised light ray, the oscillations in the electric field are:

A In all directions, perpendicular to the direction of propagation

B In one plane, perpendicular to the direction of propagation

C Longitudinal and parallel to the direction of propagation

D Transverse and parallel to the direction of propagation

Your answer B

[1]

8 Which value is the best estimate for the largest acceleration experienced on a typical rollercoaster?

A $10\,\mathrm{m\,s^{-2}}$

B $30\,\mathrm{m\,s^{-2}}$

C $100\,\mathrm{m\,s^{-2}}$

D $300\,\mathrm{m\,s^{-2}}$

Your answer B

[1]

9 The graph shows the stress and strain for a loaded wire.

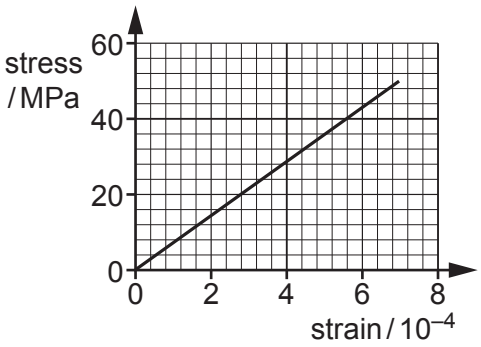

The Young modulus of the wire is:

A 14 GPa

B 60 GPa

C 71 GPa

D 83 GPa

Your answer C

[1]

© OCR 2023

stemup.co.uk

10 A scale is marked on a thermometer by first placing it in ice at 0 °C and then steam at 100 °C.

This process is an example of:

A accuracy

B calibration

C precision

D resolution

Your answer B

[1]

11 When the load on a stretched wire is doubled without exceeding its elastic limit, the elastic strain energy, E, increases to:

A $\sqrt{2E}$

B $\sqrt{2}E$

C $2E$

D $4E$

Your answer D

[1]

© OCR 2023

12 A boat moves forwards at $5\,m\,s^{-1}$ and is carried by the current at $3\,m\,s^{-1}$ in a perpendicular direction. Calculate the resultant speed.

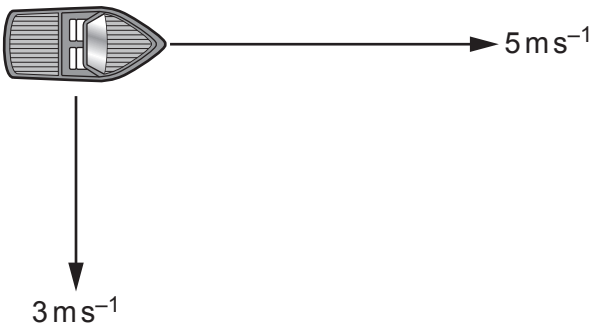

A $2.8\,m\,s^{-1}$

B $4.0\,m\,s^{-1}$

C $5.8\,m\,s^{-1}$

D $8.0\,m\,s^{-1}$

Your answer C

[1]

13 The graph shows the output p.d. of a temperature sensor at different temperatures, θ.

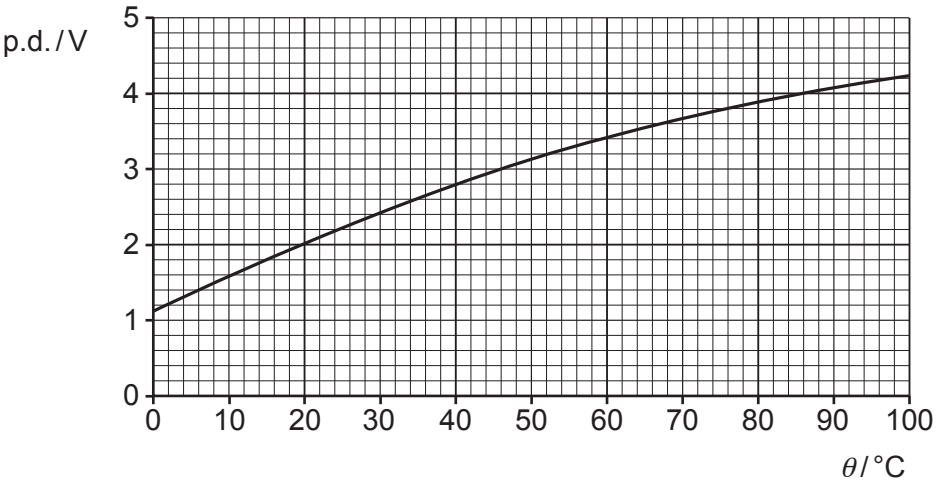

Estimate the sensitivity of this temperature sensor at 20 °C.

A $0.1\,°C\,V^{-1}$

B $10\,V\,°C^{-1}$

C $23\,°C\,mV^{-1}$

D $43\,mV\,°C^{-1}$

Your answer D

[1]

© OCR 2023

stemup.co.uk

14 In an experiment to measure the refractive index of plastic using a rectangular block, ray box and protractor, the largest source of error is probably best reduced by:

A Increasing the brightness of the rays

B Measuring the angles more carefully

C Obtaining the narrowest possible rays

D Securing the rectangular block in position

Your answer C

[1]

15 Which experiment does **not** provide direct evidence of the size or spacing of particles?

A Electron diffraction images

B Oil drop film experiment

C Photoelectric effect

D Scanning tunneling microscopy images

Your answer C

[1]

16 Estimate the reading on the ammeter in this circuit.

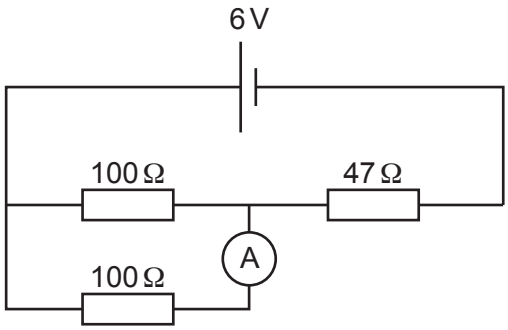

A 20 mA

B 30 mA

C 40 mA

D 60 mA

Your answer B

[1]

© OCR 2023

17 A detector receives a signal of constant amplitude carried by a plane-polarised wave.

Which answer describes a possible sequence of amplitude measurements when the detector is rotated through 90°?

A Maximum to minimum

B Maximum to minimum to maximum

C Minimum to maximum to minimum

D Minimum to minimum

Your answer A

[1]

18 Phasors representing waves from 3 sources are shown in the diagram.

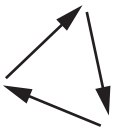

Adding phasors in this way models:

A absorption

B coherence

C diffraction

D superposition

Your answer D

[1]

© OCR 2023

stemup.co.uk

Use the data in the table to answer questions **19** and **20**.

The data in the table shows measurements of power output for an engine at different r.p.m. settings.

Three power measurements and their mean are given for each r.p.m. setting.

Engine r.p.m.	**Power / kW**			
	1	2	3	Mean
2000	155	155	152	154
2500	190	196	190	192
3000	212	210	215	212
3500	225	220	225	223
4000	220	223	220	221
4500	160	165	162	212

19 The best estimate of the r.p.m. that delivers maximum power is:

A 3250 r.p.m.

B 3500 r.p.m.

C 3750 r.p.m.

D 4000 r.p.m.

Your answer C

[1]

20 The best estimate of the uncertainty in power at 2500 r.p.m. is:

A ±1 kW

B ±2 kW

C ±3 kW

D ±6 kW

Your answer C

[1]

© OCR 2023

Section B

21 The diagram shows a rocket in flight. The angle θ is 25 degrees.

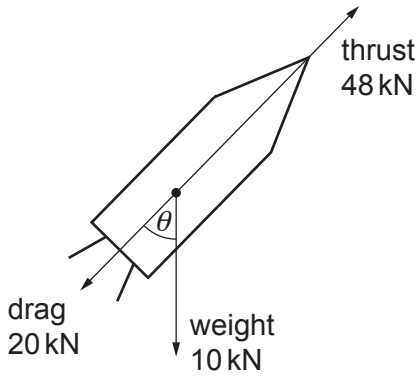

(a) The thrust force and the drag force on the rocket are shown in the diagram.

State the resultant of these two forces.

28 kN in the direction of the thrust (forwards along the rocket) **[2]**

(b) Calculate the magnitude of the horizontal component of this resultant force.

horizontal component = 28 × sin 25° = 11.8 kN

force = 11.8 kN **[2]**

(c) Explain why the weight force has no effect on the horizontal acceleration.

Weight acts vertically downwards, so it has no horizontal component.

Vertical and horizontal forces (and accelerations) are independent.

[2]

© OCR 2023

stemup.co.uk

22 The figure shows the equipment used to demonstrate electron diffraction. Electrons are accelerated through a potential difference, strike a target material and produce an interference pattern on a fluorescent screen.

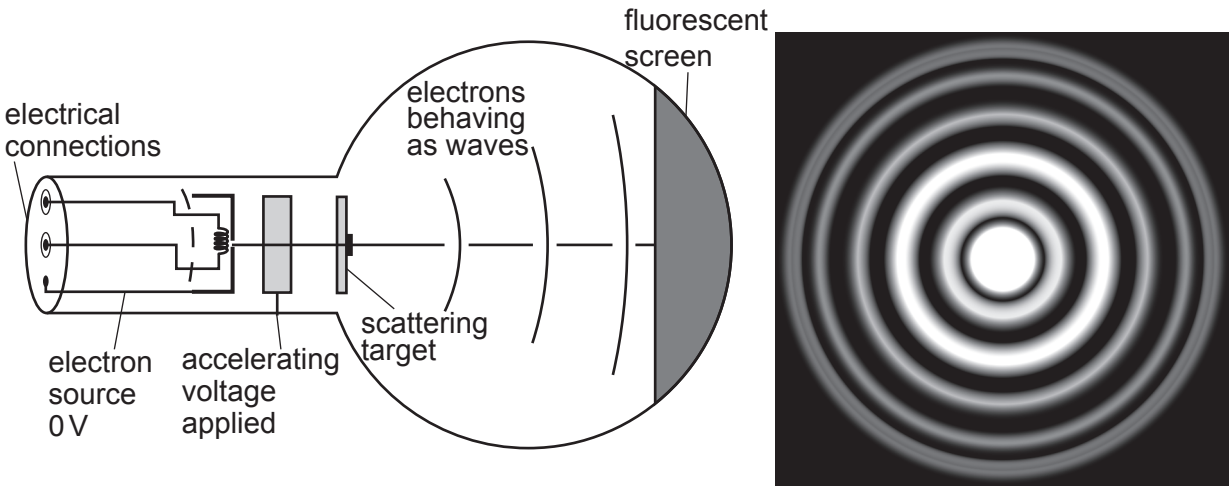

(a) Calculate the de Broglie wavelength of an electron travelling at $8.5 \times 10^6\,\mathrm{m\,s^{-1}}$.

$\lambda = h/p = h/mv = 6.63 \times 10^{-34} \div (9.11 \times 10^{-31} \times 8.5 \times 10^6)$

$\lambda = 8.56 \times 10^{-11}$ m

wavelength = 8.6×10^{-11} m **[2]**

(b) Explain why the pattern on the fluorescent screen has light and dark regions.

You may draw a diagram to support your answer.

The electrons behave as waves and are diffracted by the atoms of the target, so the waves superpose (interfere) at the screen.

Light regions: constructive interference, where the waves arrive in phase (path difference a whole number of wavelengths).

Dark regions: destructive interference, where the waves arrive in antiphase (path difference an odd number of half wavelengths). **[2]**

© OCR 2023

23 A student is studying the toughness of glass and copper.

She makes a small crack on the surface of a sample of each material, as shown below.

She applies a local stress to the cracks by bending the sample.

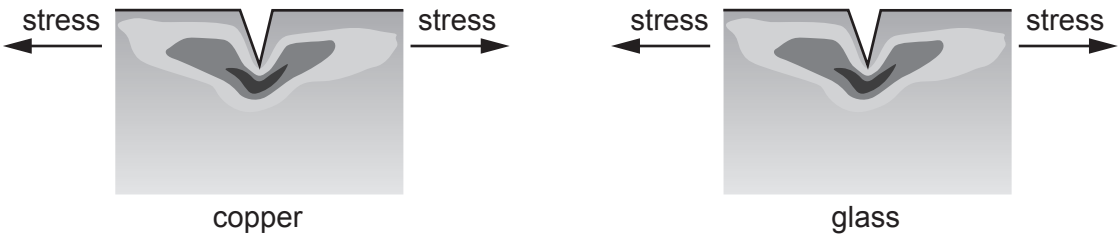

(a) Describe the student's observations as the stress is increased.

Glass ..the crack spreads and the glass suddenly snaps (fractures).....

.....

Copper ..the copper bends (deforms plastically) without breaking.....

.....

[2]

(b) Explain the observations in terms of mobile dislocations.

You may use a diagram to explain your answer.

Copper has mobile dislocations, glass does not. In copper planes of atoms slip, so the stress spreads out; in glass the stress concentrates at the crack tip, so the crack propagates. **[2]**

© OCR 2023

stemup.co.uk

24 The diagram shows sketch graphs of conductivity against temperature for different materials.

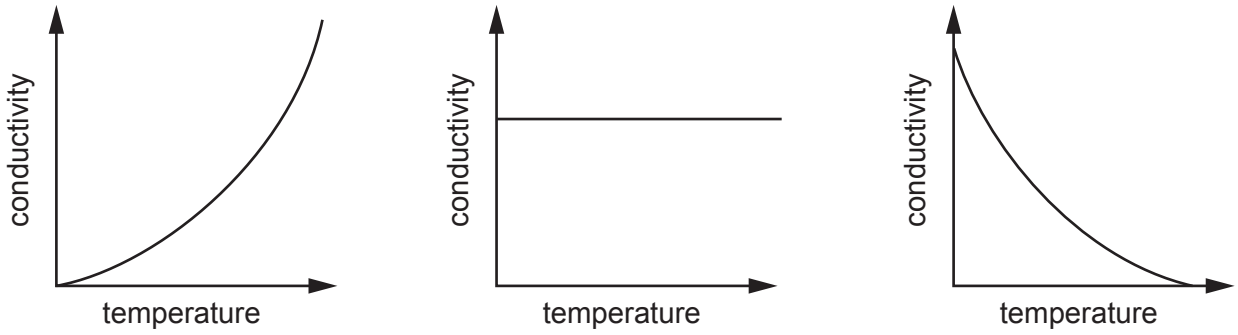

A **B** **C**

(a) State and explain which graph shows the relationship between conductivity and temperature for a semiconductor material.

Graph A. As the temperature increases more electrons are freed, so the number of mobile (free) charge carriers increases and the conductivity increases. **[2]**

Graphene is a form of carbon with unusual electrical properties that depend on its shape.

It can be made into thin strips or *nanoribbons* only a few atoms thick.

Graphene nanoribbon has a high conductivity which is almost independent of temperature.

(b) **(i)** Suggest why this property would make graphene nanoribbon an attractive replacement for the narrow metal wires used in electronic circuits.

Metal wire resistance increases with temperature; graphene's would not, so the circuit's behaviour would not change as it warms. **[1]**

© OCR 2023

A graphene nanoribbon has dimensions shown in the diagram.

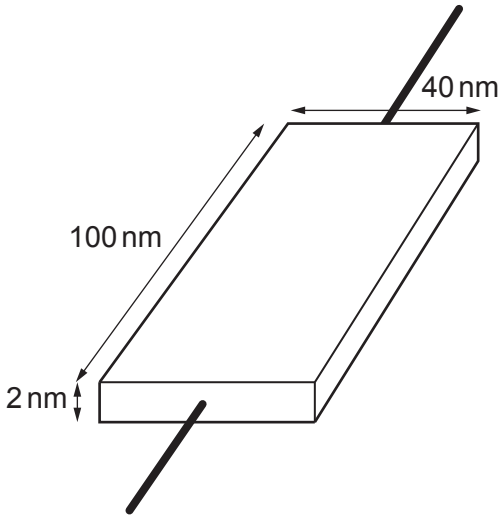

The resistance of the nanoribbon is 200 Ω.

(ii) Calculate the conductivity of the graphene nanoribbon.

$G = \sigma A/L$ and $G = 1/R$, so $\sigma = L/(RA)$

$A = 2 \times 10^{-9} \times 40 \times 10^{-9} = 8.0 \times 10^{-17}\ m^2$

$\sigma = 100 \times 10^{-9} \div (200 \times 8.0 \times 10^{-17})$

$\sigma = 6.25 \times 10^{6}\ S\ m^{-1}$

conductivity = 6.3×10^{6} S m^{-1} **[3]**

© OCR 2023

stemup.co.uk

Section C

25 The figure shows a 'dashcam', a camera used to record images while driving.

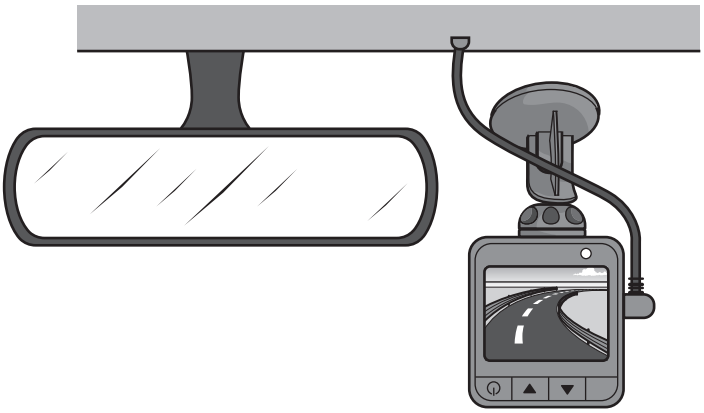

The camera is designed to focus objects that are 5.0 m in front of the lens.
The distance from the lens to the sensor inside the camera is 4.0 cm.

(a) Show that the focal length of the lens is approximately 4 cm.

$1/v = 1/u + 1/f$ with $u = -500$ cm, $v = 4.0$ cm

$1/f = 1/v - 1/u = 1/4.0 + 1/500 = 0.250 + 0.002 = 0.252\ cm^{-1}$

$f = 1 \div 0.252 = 3.97\ cm \approx 4\ cm$

[2]

The diagram below shows wavefronts from an object in front of the dashcam incident on the lens.

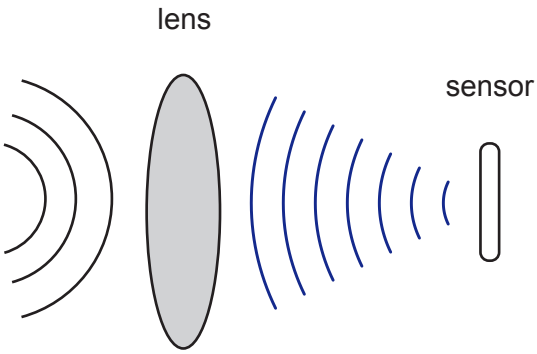

(b) Add to the diagram to show the wavefronts between the lens and the sensor. **[2]**

© OCR 2023

The dashcam requires a memory card to store the video it captures.

The dashcam's image sensor is made of a 4096 × 2048 rectangular array of pixels and can resolve up to 16 million different colours.

(c) How many bits per pixel are required to resolve over 16 million different colours?

$2^n \geq 16\ 000\ 000$

$n = \log 16\ 000\ 000 \div \log 2 = 23.9$

so 24 bits are needed ($2^{24} = 16\ 777\ 216$)

bits per pixel = ...24..... **[2]**

The dashcam records 22 frames of video per second and compresses images before storing them so they are only 10% of their original size.

(d) Show that no more than 21 minutes of video could be stored on a 64 GB memory card.

bits per frame = $24 \times 4096 \times 2048 = 2.01 \times 10^8$ bits

after compression: $0.10 \times 2.01 \times 10^8 = 2.01 \times 10^7$ bits

bit rate = $22 \times 2.01 \times 10^7 = 4.43 \times 10^8$ bit s^{-1}

card = $64 \times 1024 \times 1024 \times 1024 \times 8 = 5.50 \times 10^{11}$ bits

time = $5.50 \times 10^{11} \div 4.43 \times 10^8 = 1241$ s

= $1241 \div 60 = 20.7$ minutes, which is less than 21 minutes

[3]

© OCR 2023

stemup.co.uk

26 When a violin string is plucked, waves travel outwards in both directions along the string.

(a) Explain how this can result in a stationary wave on the string.

You may use a diagram to explain your answer.

The waves are reflected at the fixed ends and the waves travelling in opposite directions superpose (interfere): there is always constructive interference at antinodes and always destructive interference at nodes. **[3]**

A student investigates the sound produced by a violin string.

He uses a microphone to convert the sound into an electrical signal which is displayed on an oscilloscope. The oscilloscope trace is shown below.

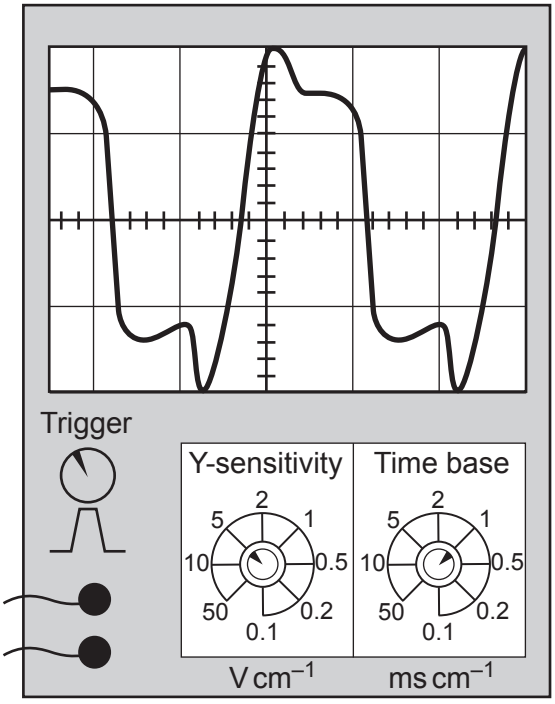

The oscilloscope is set to time base 1 ms cm^{-1} and Y-sensitivity 5 mV cm^{-1}.

(b) State the amplitude of the electrical signal.

amplitude = 10 mV **[1]**

© OCR 2023

(c) Determine the frequency of the signal.

one cycle = 3.0 cm on the screen

$T = 3.0\ cm \times 1\ ms\ cm^{-1} = 3.0\ ms$

$f = 1/T = 1 \div 3.0 \times 10^{-3} = 333\ Hz$

frequency = ...330..... Hz **[3]**

The shape of the signal is not a pure sine wave. This is because the sound produced by the string is not a single frequency but a mixture of several frequencies and wavelengths that together make up the tone quality of the sound of the violin.

(d) The length of the string is *L*.

Draw diagrams in the space below to show that the three longest wavelengths produced on the string are 2*L*, *L* and $\frac{2}{3}L$.

The fixed end-points of the string and its equilibrium position have been included for you on each diagram.

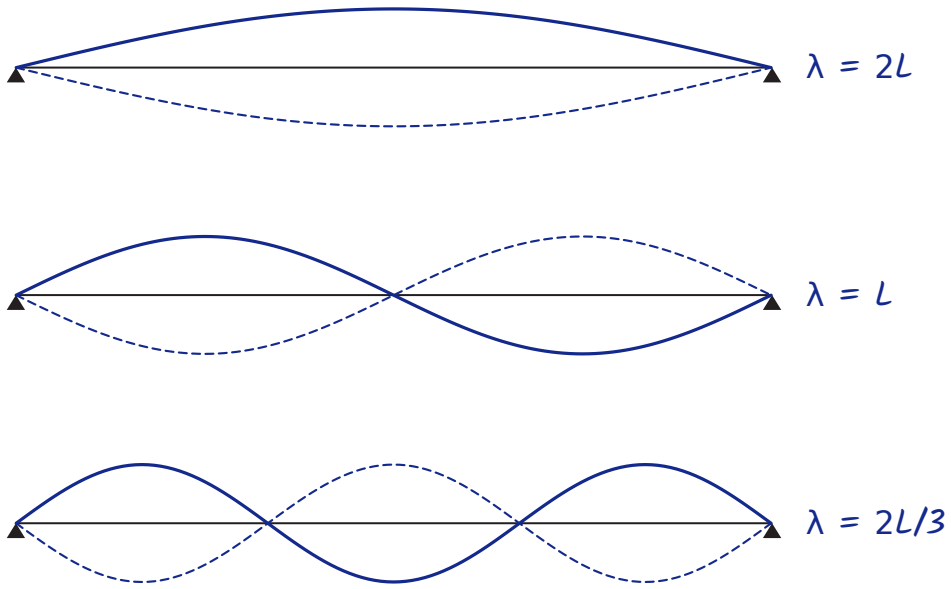

[3]

© OCR 2023

stemup.co.uk

27 Two students investigate the terminal velocity of paper cones. The cones are made by cutting a wedge from a circle of paper and joining the two edges of the wedge with sticky tape, as shown in **Fig. 27.1**. Different wedge sizes produce different cone angles.

One student drops the paper cones from rest at a height of 1.9 m. The other student times the fall using a stopwatch. The arrangement is shown in **Fig. 27.2**.

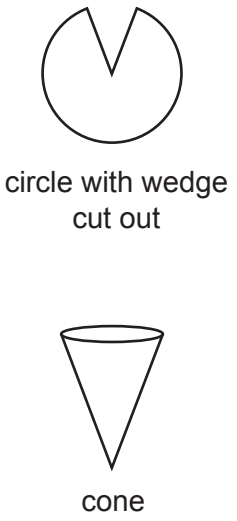

Fig. 27.1

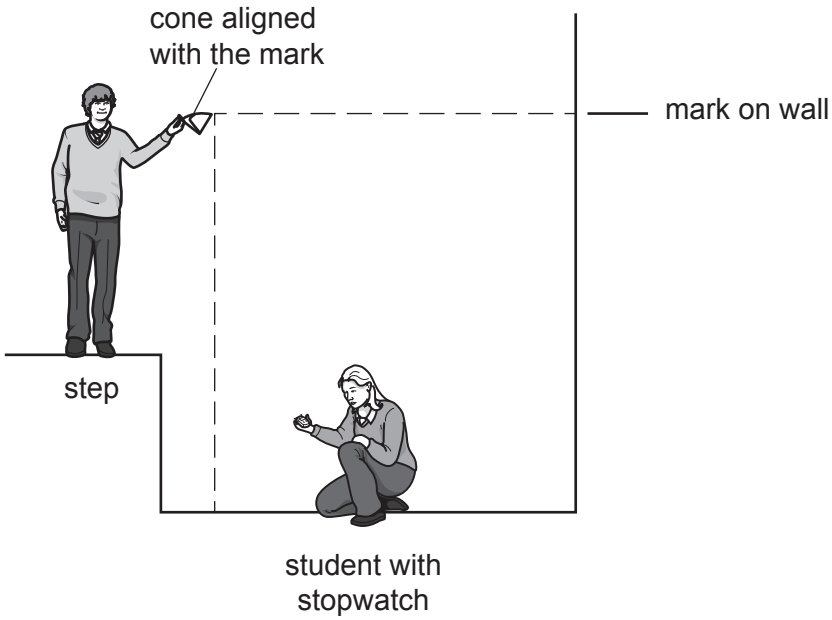

Fig. 27.2

The students test each cone twice. Their results are shown in the table below.

Wedge angle / °	Time / s		
	Trial 1	**Trial 2**	**Mean**
30	1.78	1.66	1.72
45	1.61	1.63	1.62
60	1.60	1.61	1.60
75	1.61	1.55	1.58
90	1.63	1.51	1.57
105	1.31	1.50	1.40
120	1.32	1.42	1.37

© OCR 2023

(a) Describe the vertical forces on the cone when at its 'terminal velocity'.

Weight acts downwards and air resistance (drag) acts upwards.

The weight and the air resistance are equal in magnitude, so the resultant force is zero. **[2]**

(b) Calculate the average **speed** of the cone with wedge angle 45°.
Give an appropriate number of significant figures.

mean time = (1.61 + 1.63) ÷ 2 = 1.62 s

average speed = 1.9 ÷ 1.62 = 1.17 m s^{-1}

average speed = 1.2 m s^{-1} **[2]**

(c) Explain why the instantaneous speed of the cone during its fall **cannot** be calculated using the equation: $v^2 = u^2 + 2as$.

The equation only applies when the acceleration is constant.

Here the air resistance changes as the speed changes, so the resultant force and hence the acceleration vary. **[2]**

The students form the hypothesis that the wedge angle is inversely proportional to the time to fall.

(d) **(i)** Show that the measurements do **not** support this hypothesis.

Inversely proportional means angle × time is constant (double angle, half time).

30 × 1.72 = 51.6 but 60 × 1.60 = 96, not equal, so not supported.

[2]

© OCR 2023

stemup.co.uk

Four other students are asked to suggest how to improve the measurements.

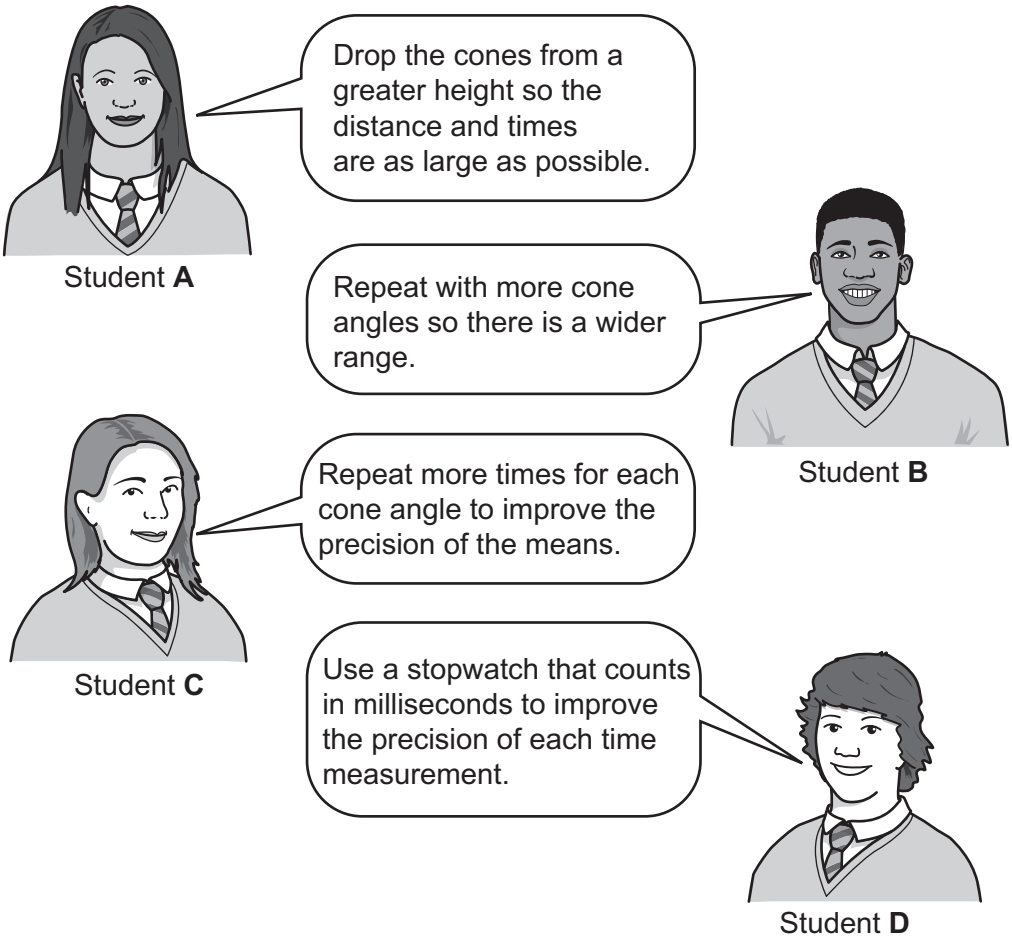

(ii) State and explain which **one** student's suggestion will provide the best measurements to prove or disprove their hypothesis.

Student A.

The largest source of error is the reaction time of the student starting and stopping the stopwatch.

Dropping the cones from a greater height makes the times larger, so the reaction time gives a smaller percentage uncertainty in each time (and in the height).

This makes the differences in time between the cone angles clearer, so the hypothesis can be tested more reliably. **[3]**

END OF QUESTION PAPER

© OCR 2023

ADDITIONAL ANSWER SPACE

If additional space is required, you should use the following lined page(s). The question number(s) must be clearly shown in the margin(s).

© OCR 2023

OCR
Oxford Cambridge and RSA

Copyright Information

OCR is committed to seeking permission to reproduce all third-party content that it uses in its assessment materials. OCR has attempted to identify and contact all copyright holders whose work is used in this paper. To avoid the issue of disclosure of answer-related information to candidates, all copyright acknowledgements are reproduced in the OCR Copyright Acknowledgements Booklet. This is produced for each series of examinations and is freely available to download from our public website (www.ocr.org.uk) after the live examination series.

If OCR has unwittingly failed to correctly acknowledge or clear any third-party content in this assessment material, OCR will be happy to correct its mistake at the earliest possible opportunity.

For queries or further information please contact The OCR Copyright Team, The Triangle Building, Shaftesbury Road, Cambridge CB2 8EA.

OCR is part of Cambridge University Press & Assessment, which is itself a department of the University of Cambridge.

© OCR 2023