Oxford Cambridge and RSA

Monday 6 June 2022 – Morning

AS Level Physics B (Advancing Physics)

H157/02 Physics in depth

Time allowed: 1 hour 30 minutes

You must have:
- the Data, Formulae and Relationships Booklet

You can use:
- a scientific or graphical calculator
- a ruler (cm/mm)

Please write clearly in black ink. **Do not write in the barcodes.**

Centre number | | | | | | Candidate number | | | | |

First name(s) _____

Last name _____

INSTRUCTIONS
- Use black ink. You can use an HB pencil, but only for graphs and diagrams.
- Write your answer to each question in the space provided. If you need extra space use the lined pages at the end of this booklet. The question numbers must be clearly shown.
- Answer **all** the questions.
- Where appropriate, your answer should be supported with working. Marks might be given for a correct method, even if your answer is wrong.

INFORMATION
- The total mark for this paper is **70**.
- The marks for each question are shown in brackets **[ ]**.
- Quality of extended response will be assessed in questions marked with an asterisk (*).
- This document has **20** pages.

ADVICE
- Read each question carefully before you start your answer.

© OCR 2022 [601/4744/1]
DC (ST/CB) 321179/4 **R**
OCR is an exempt Charity

SECTION A

Answer **all** the questions.

1 A firework, mounted on the ground, ejects a packet vertically at an initial speed of $35\,\mathrm{m\,s^{-1}}$. The packet explodes into many glowing fragments when it reaches its highest point.

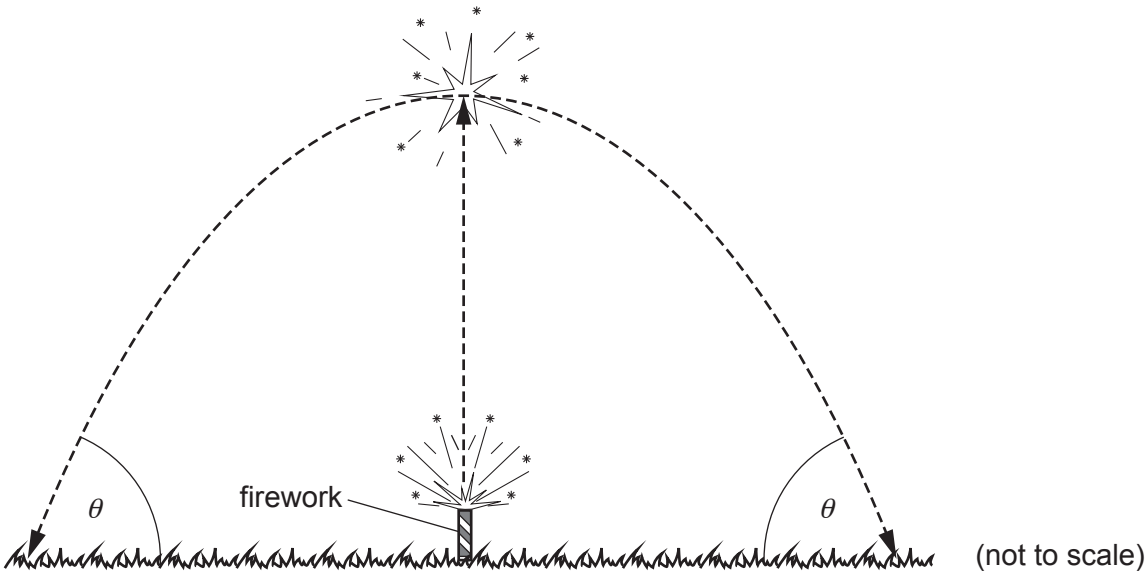

(a) Show that the height reached by the packet is approximately 60 m, assuming that air resistance is negligible and that the packet was fired from ground level.

[2]

(b) The glowing fragments travel initially horizontally at a speed of $15\,\mathrm{m\,s^{-1}}$.
Calculate the distance of one fragment from its launch site when it reaches the ground, assuming no air resistance.

distance = ... m **[2]**

© OCR 2022

(c) Calculate the angle θ with the horizontal at which the fragment hits the ground.

angle = ...° **[2]**

© OCR 2022

2 The signal below is a microphone recording of a pure sound wave of frequency f_{sound}.

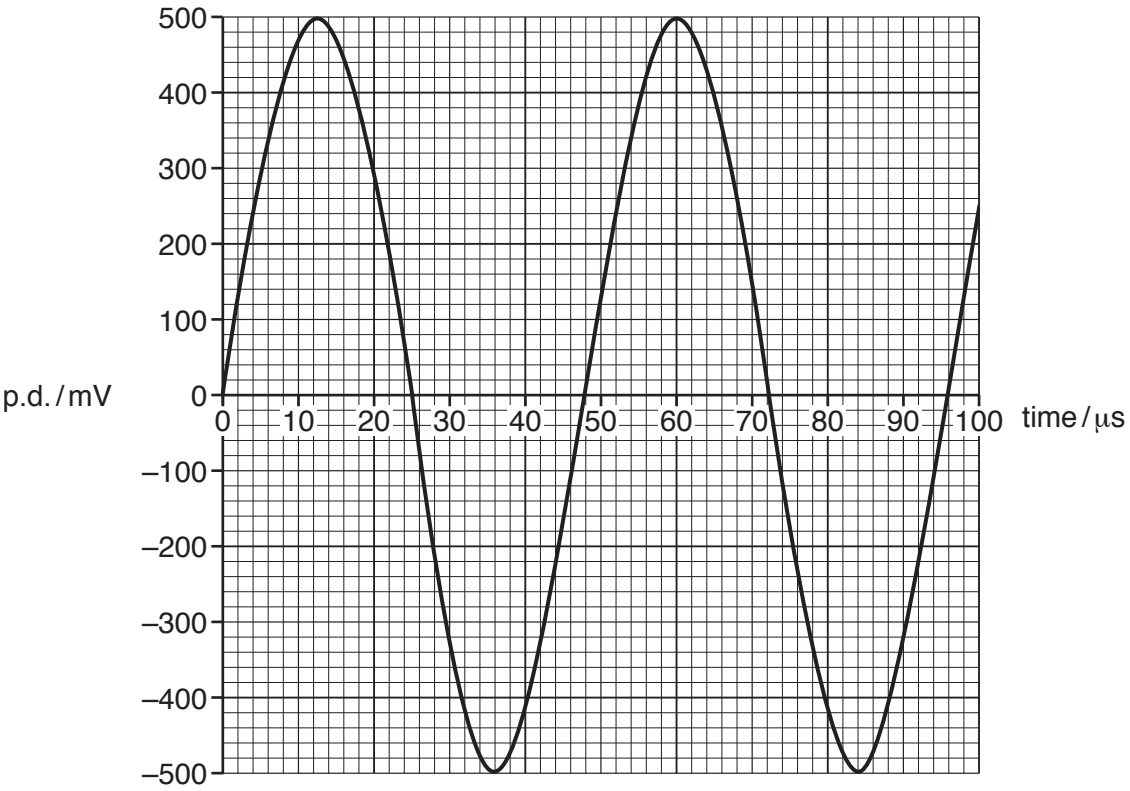

The signal is to be transmitted by radio at a frequency f_{radio} = 91.5 MHz.

(a) Calculate the ratio $\frac{f_{radio}}{f_{sound}}$.

$\frac{f_{radio}}{f_{sound}}$ = ... **[2]**

(b) A more complex sound signal is a sum of musical notes with a frequency range 18 Hz to 24 kHz. It is to be encoded as a digital signal before transmission.

Calculate the lowest rate at which the sound signal should be sampled to avoid distortion.

lowest sampling rate = ... samples s^{-1} **[1]**

© OCR 2022

3 The voltmeter in the circuit below has a very high resistance.

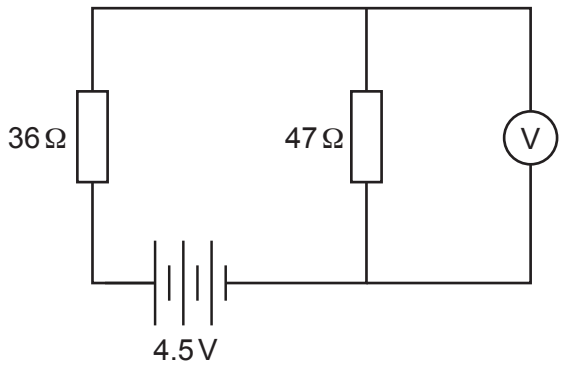

(a) Calculate the p.d. recorded by the voltmeter.

Assume that the internal resistance of the battery is negligible.

p.d. = ... V **[2]**

(b) Without calculation, state and explain how the voltmeter reading would differ from the answer to **(a)** if the battery internal resistance were not negligible.

.....

.....

.....

.....

..... **[2]**

© OCR 2022

4 A converging lens forms a real image **I** of a point object **O** as shown in the ray diagram. This ray is refracted in the region marked **A**.

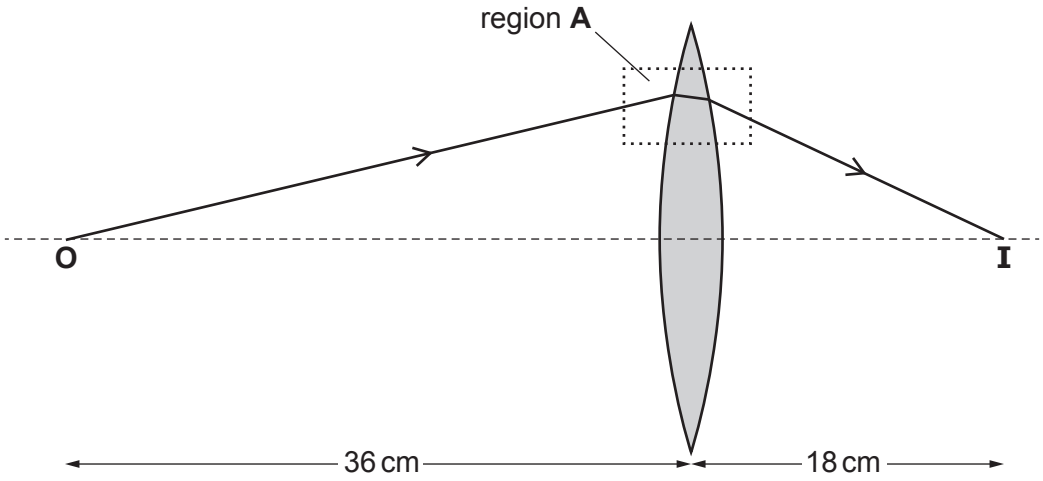

(a) Calculate the power *P* of the lens.

P = ... D **[2]**

(b) The diagram below shows the light ray in region **A**. Two wavefronts to the left of the lens are shown.

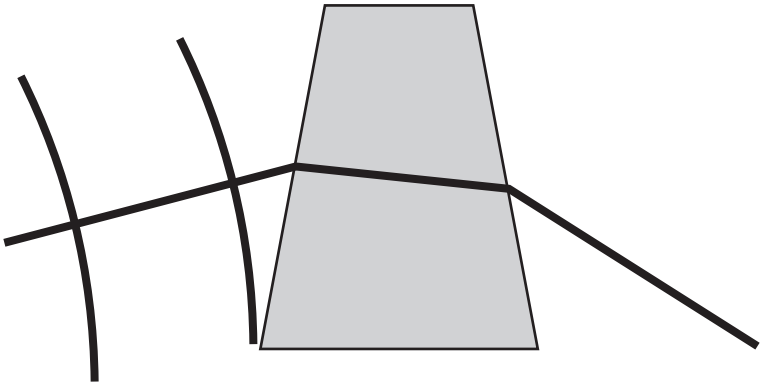

Draw wavefronts on this diagram to show how the shape and spacing of the wavefronts change as the light passes into the lens and back out on the right. **[3]**

© OCR 2022

5 A cylindrical steel wire of diameter 1.2 mm and length 3.5 m hangs from a high ceiling.

(a) Calculate the stress in the wire if a load of mass 25 kg is attached to the bottom of the wire.

stress = ... Pa **[2]**

(b) Calculate the elastic strain energy stored in the wire by the 25 kg load.
The Young modulus of elasticity of steel is 2.1×10^{11} Pa.

energy stored = ... J **[2]**

(c) The yield stress of this steel is about 15% higher than the value calculated in **(a)**. Explain why the 25 kg load, once attached to the end of the wire, should be lowered gently into its final position rather than allowing it to drop into place.

.....

.....

.....

.....

..... **[3]**

© OCR 2022

SECTION B

Answer **all** the questions.

6 This question is about using remote sensors to make measurements on the planet Mars.

(a) In February 2021, the rover *Perseverance* landed on the planet Mars. **Fig. 6.1** shows a simplified diagram of the last stage of this landing, using a 'sky crane.'

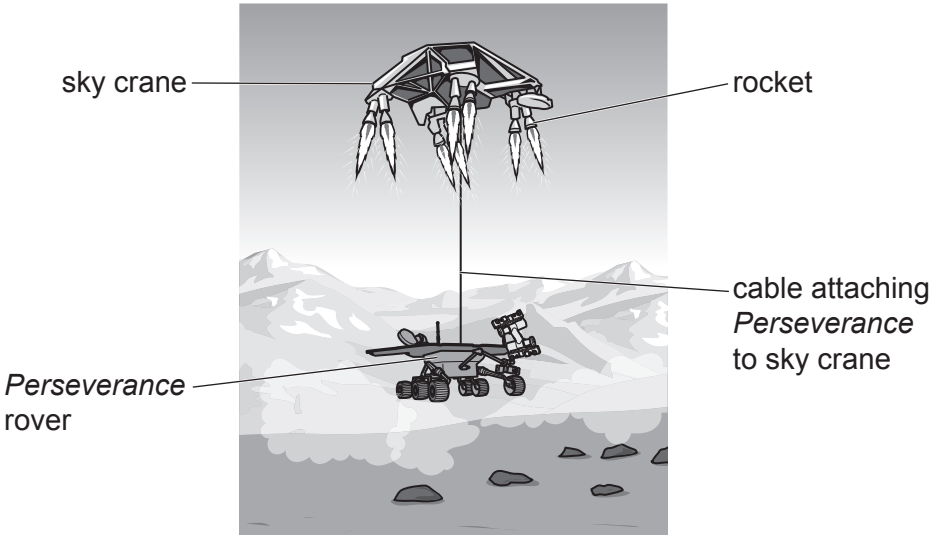

Fig. 6.1

The sky crane used its rockets to hover a fixed distance above the ground. It lowered the rover slowly at a steady speed until the rover reached the ground. Once the rover was securely on the ground, the supporting cable was cut and the sky crane flew off to crash some distance away.

The graph in **Fig. 6.2** shows how the upward force *F* produced by the rockets on the sky crane varied during the time it was hovering at a fixed height.

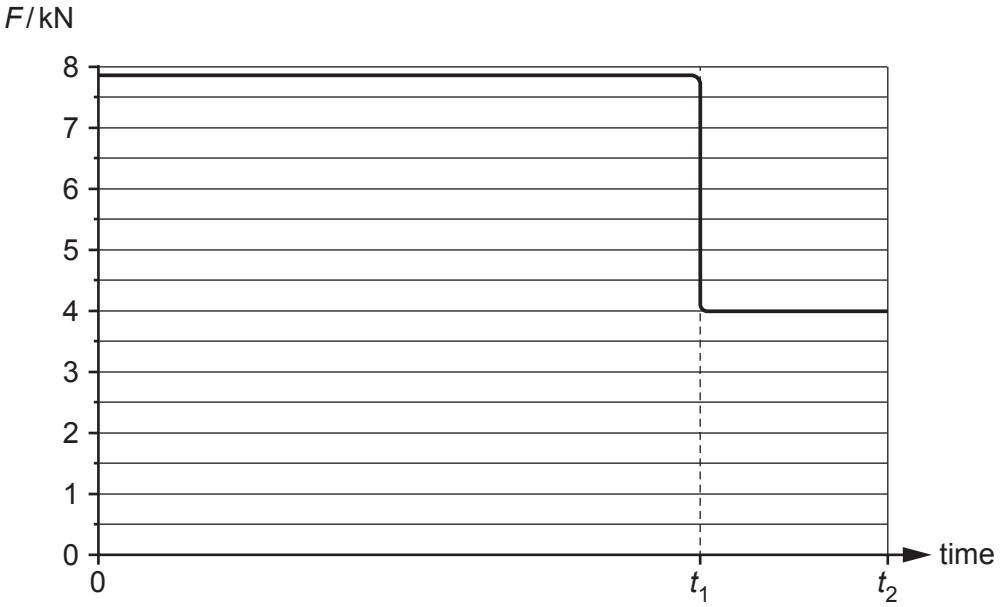

Fig. 6.2

© OCR 2022

(i) Describe and explain the shape of the graph in **Fig. 6.2**.

.....

.....

.....

.....

.....

.....

..... **[3]**

(ii) Use **Fig. 6.2** to calculate *g*, the acceleration due to gravity on the surface of Mars.

Mass of *Perseverance* rover = 1030 kg

g = ... $N\,kg^{-1}$ **[2]**

(b) *Perseverance* has a pair of high-resolution cameras to aid navigation and to investigate the surroundings.

(i) The CCD sensor in each camera consists of an array of square pixels. There are 1600 × 1200 square pixels in an area of $1.05 \times 10^{-4}\,m^2$. Show that the length of an edge of one pixel is about 7 μm.

[2]

(ii) When the camera records an image of a distant object, the image distance *v* from the lens to the CCD sensor is 19.5 mm. Show that the camera can resolve two points less than 5 cm apart on an object 100 m from the camera.

[2]

© OCR 2022

(iii) The full-colour images recorded by each camera are encoded at 11 bits pixel^{-1}. Suggest why more than 8 bits pixel^{-1} are needed and calculate the number of images that can be stored in an 8 Gb (8×10^9 bit) memory unit.

Suggestion: .....

.....

.....

.....

.....

number of images = ... **[2]**

(iv)* As much of the data recorded by *Perseverance* on its 8 Gb memory unit as possible must be sent to Earth. Artificial Intelligence programs on the rover can check each image to select those which seem most useful.

Method A. *Perseverance* can transmit directly to Earth. This can be done for about 6 hours each Martian day, when Earth is 'visible' to the rover. Data can be sent in this way at a rate which varies between 500 bits per second and 3200 bits per second depending on the atmospheric conditions on Mars and how high Earth is above the Martian horizon.

Method B. There is a series of satellites in orbit around Mars. *Perseverance* can transmit to one of these satellites at a rate of 256 000 bits s^{-1}, and the satellite then transmits directly to Earth at a rate of 2 Mbit s^{-1}. This method of transferring data can be done for about 8 minutes each Martian day. 1 Martian day is about the same length as an Earth day.

Use the information above to decide whether method **A** or method **B**, or a combination of the two, should be used to transfer *Perseverance's* data to Earth. Use calculations to justify your answer.

.....

.....

.....

.....

.....

.....

.....

.....

.....

..... **[6]**

© OCR 2022

7 This question is about refraction of light.

(a) **Fig. 7.1(a)** shows plane wavefronts of monochromatic light travelling in a vacuum approaching a glass block and **Fig. 7.1(b)** shows the situation at a time $4T$ later, where T is the period of the wave.

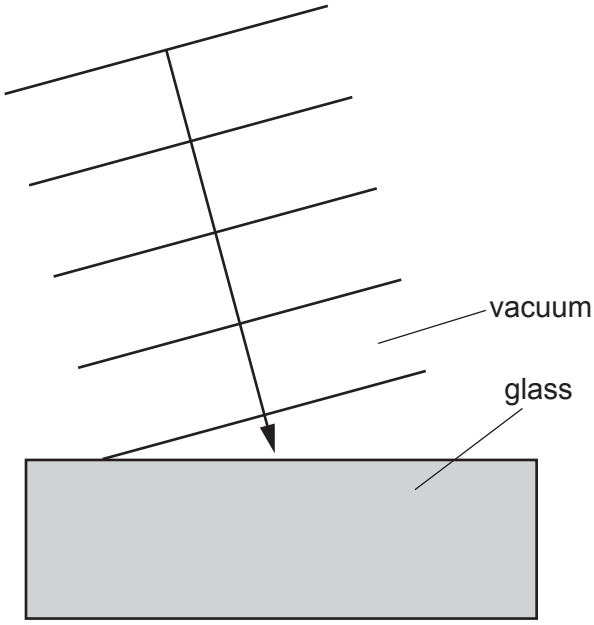

Fig. 7.1(a)

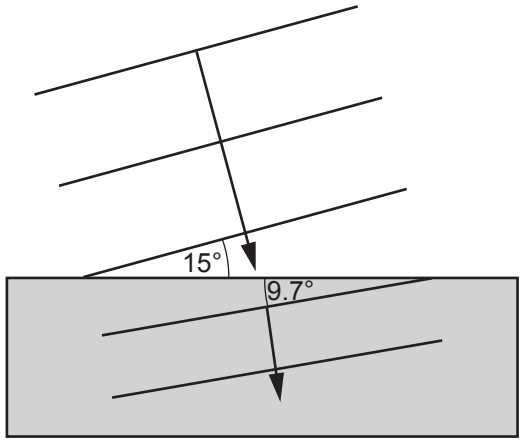

Fig. 7.1(b)

(i) Calculate the wavelength λ in vacuum, given that the period $T = 1.53 \times 10^{-15}$ s.

λ = ... m **[2]**

(ii) Show that the speed v of the light in glass is about $2 \times 10^{8}\,\mathrm{m\,s^{-1}}$.

[2]

© OCR 2022

(iii) The refractive index n of glass is related to the wavelength λ of the light by the equation

$$n = A + \frac{B}{\lambda^2}$$

where A and B are constants for the glass used.

Without calculation, use this relationship to describe how longer-wavelength light will refract differently from **Fig. 7.1(b)**.

.....

.....

.....

.....

.....

.....

..... **[2]**

(b) A different model of light is that light consists not of waves but of particles, which Newton called 'corpuscles'.

Fig. 7.2 shows a corpuscle of light, travelling in a vacuum at a speed $3 \times 10^8\,\mathrm{m\,s^{-1}}$, moving at an angle of 15° towards a glass block.

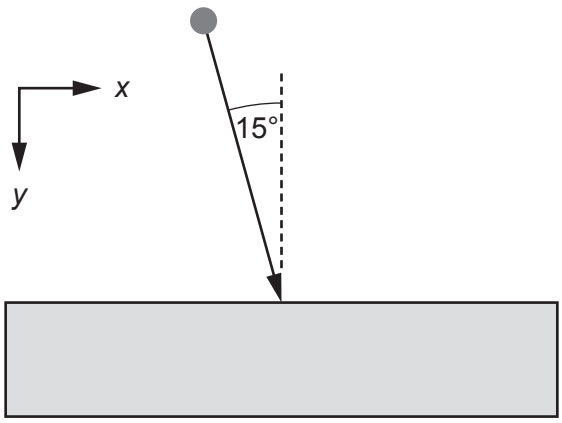

Fig. 7.2

(i) Calculate the values of the velocity components of the corpuscle in the x- and y-directions just before it enters the glass block.

component parallel to the vacuum-glass boundary, c_x = ... $\mathrm{m\,s^{-1}}$

component perpendicular to the vacuum-glass boundary, c_y = ... $\mathrm{m\,s^{-1}}$

[1]

© OCR 2022

(ii) As the corpuscle enters the glass, due to an interaction with the vacuum-glass boundary it experiences a force into the glass perpendicular to the boundary, as shown in **Fig. 7.3**.

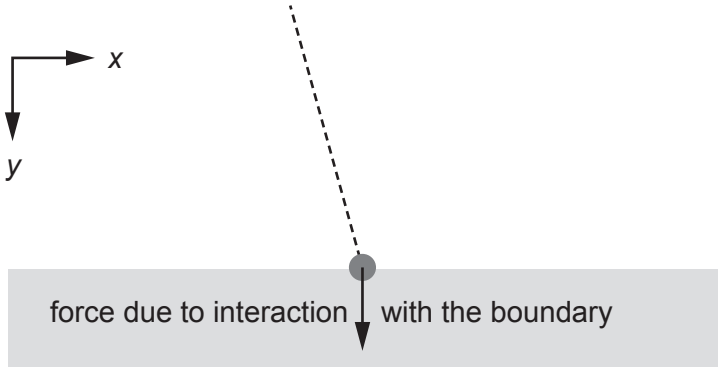

Fig. 7.3

Describe and explain the effect of this force has on the components c_x and c_y and of the magnitude and direction of the velocity of the corpuscle once it has passed the boundary. You should assume, as Newton did, that the corpuscle is not massless, and that it experiences zero force inside the glass.

.....

.....

.....

.....

.....

.....

..... **[4]**

(c) Both the wave model and the corpuscle model can explain Snell's Law $n = \frac{\sin i}{\sin r}$ equally well, but other predictions of the two models disagree.

The French physicists Fizeau and Foucault compared the speed of light in air with the speed of light in water and found that light travels slower through water than through air. It was later shown that light travels slightly faster through vacuum than through air.

Explain what these experiments showed about the nature of light.

.....

.....

.....

..... **[2]**

© OCR 2022

SECTION C

8 Two students are doing experiments to measure the wavelength of microwaves.

Beth uses three sheets of aluminium to construct the double-slit arrangement shown in **Fig. 8.1** where d = 8.0 cm. She knows that the wavelength λ of the microwaves is in the range 1 – 5 cm.

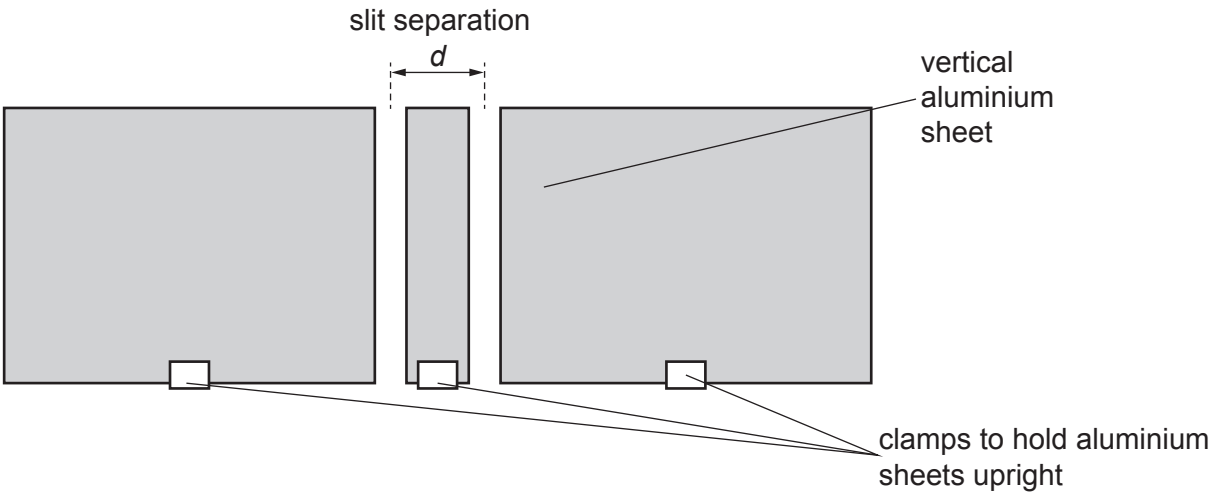

Fig. 8.1

A microwave emitter is placed facing the double-slit and a sensitive microwave sensor placed a distance L from the slits on the other side, as shown in **Fig. 8.2**. The microwave sensor is connected directly to a sensitive ammeter reading 0 – 100 μA.

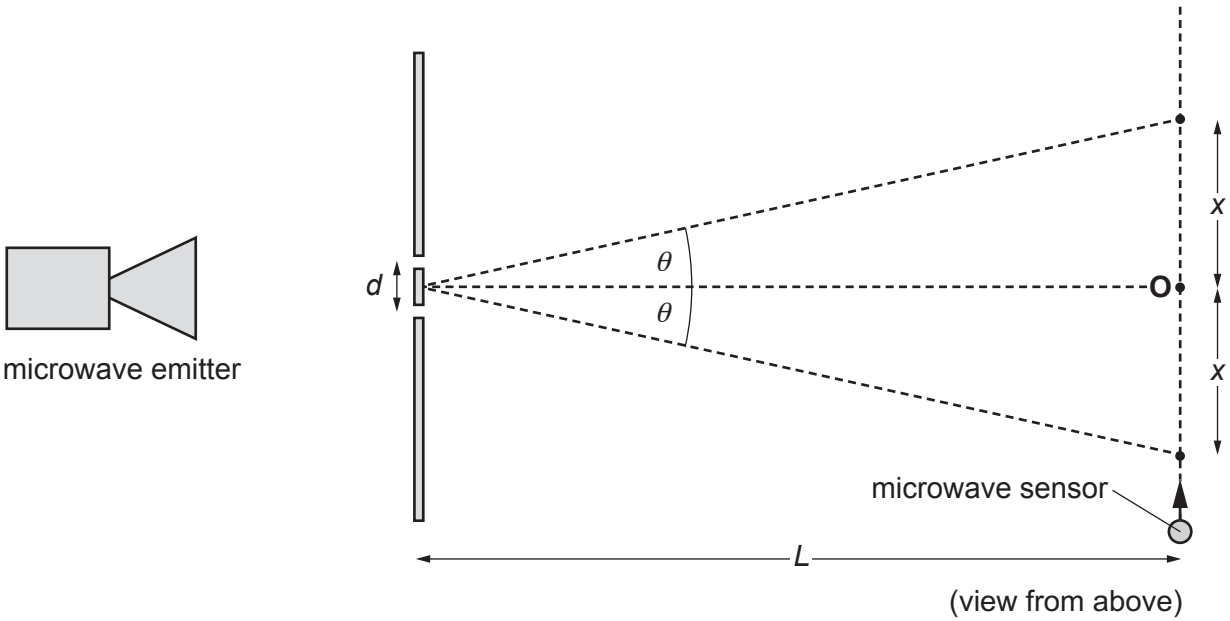

Fig. 8.2

The point **O** is directly opposite the centre of the double slits. The two points a distance x from **O**, and at an angle θ from the centre line, are the first-order intensity maxima of the double slit pattern.

© OCR 2022

(a) Beth knows that, for small enough values of θ, the grating equation $\lambda = d\sin\theta$ can be written $\lambda = \frac{xd}{L}$ which can be rearranged to $x = \left(\frac{\lambda}{d}\right) L$.

She measured the distance $2x$ between the two first-order maxima for a range of values of L and estimated the uncertainty Δx by observing the range of values of $2x$ over which the ammeter reading seemed to stay at a maximum and then halving that value.

Fig. 8.3 shows the data from the experiment.

Complete the graph with suitable straight lines and use them to obtain the gradient $\frac{\lambda}{d}$ and its uncertainty. Use these values to calculate the wavelength of the microwaves and its uncertainty, given that $d = 8.0$ cm.

Express your answers to an appropriate number of significant figures.

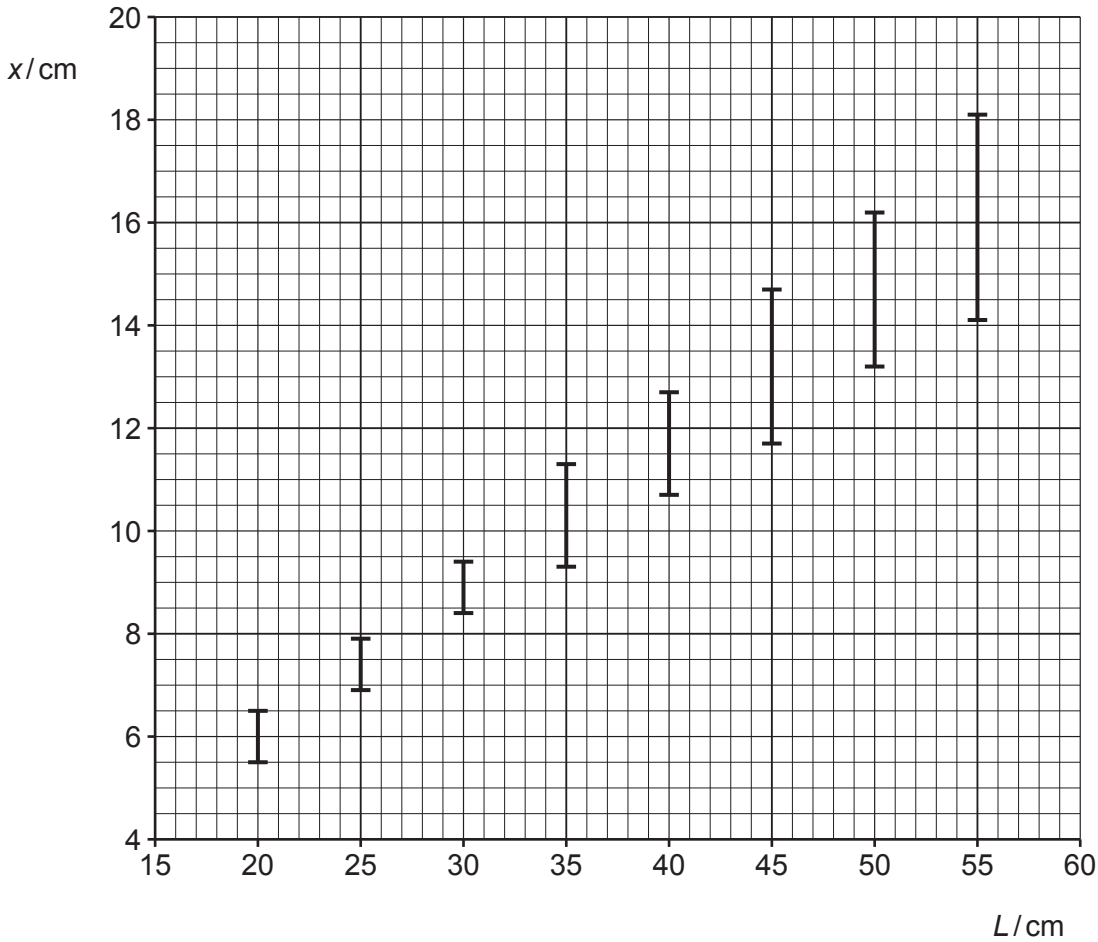

Fig. 8.3

gradient, $\frac{\lambda}{d}$ = ... ± .....

λ = ... ± ..... cm

[5]

© OCR 2022

(b) Jack chooses a different method based on single-slit diffraction. He has read that the diffraction pattern produced by waves of wavelength λ passing through a slit of width b has its first subsidiary minimum at an angle θ from the straight-on direction, where $b \sin\theta = \lambda$.

Using the same microwave emitter and sensor, he sets up his experiment as in **Fig. 8.4**, where the slit width b = 7.5 cm.

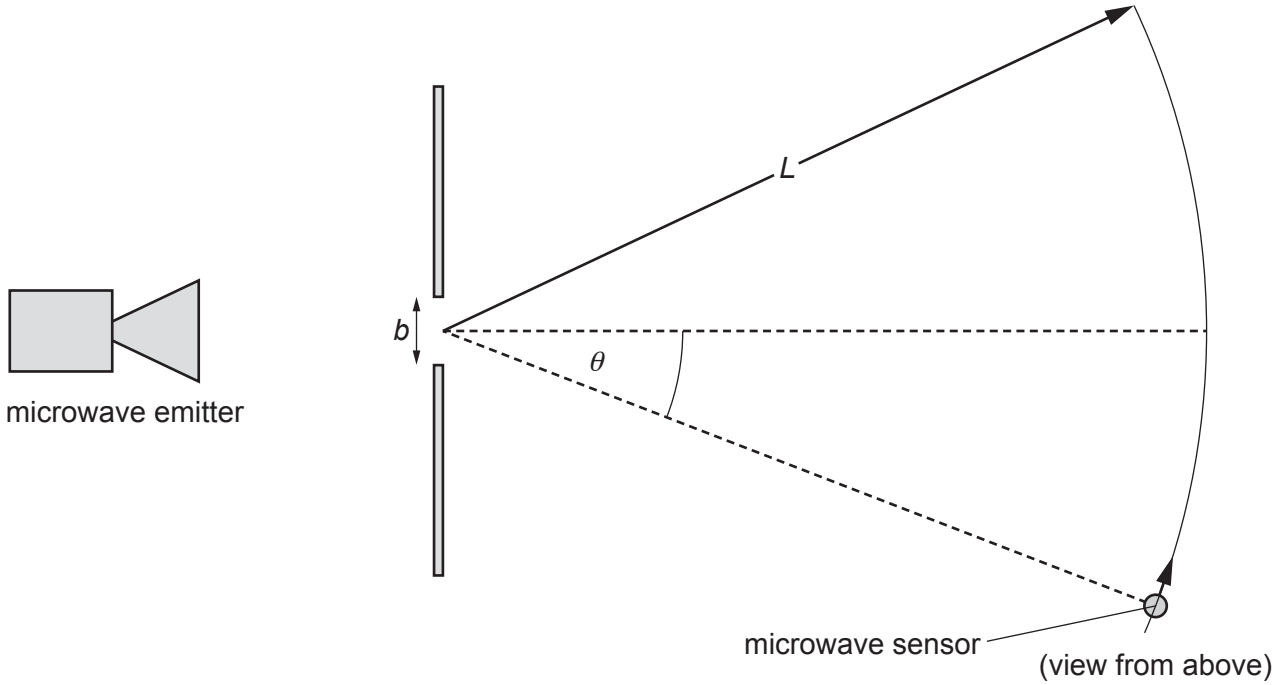

Fig. 8.4

He moves the microwave sensor gradually along the circular arc of radius L shown in **Fig. 8.4**, recording the ammeter reading at different values of angle θ, measured with a protractor of resolution ±1°. The graph of **Fig. 8.5** shows his ammeter readings as a function of angle.

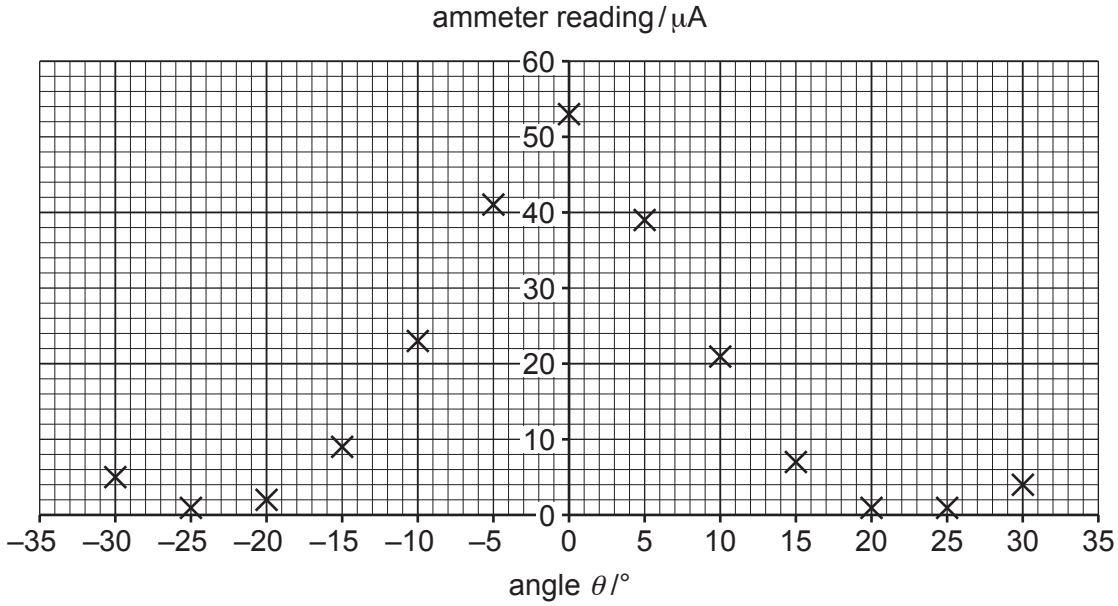

Fig. 8.5

© OCR 2022

Use **Fig. 8.5** to determine the wavelength λ of the microwaves, together with an estimate of the uncertainty. Show your working and express your answers to an appropriate number of significant figures.

λ = ... ± ..... cm **[4]**

(c)* Evaluate the two experiments of parts **(a)** and **(b)**.

.....

.....

.....

.....

.....

.....

.....

.....

.....

.....

.....

.....

.....

.....

.....

..... **[6]**

END OF QUESTION PAPER

© OCR 2022

ADDITIONAL ANSWER SPACE

If additional space is required, you should use the following lined page(s). The question number(s) must be clearly shown in the margin(s).

© OCR 2022

© OCR 2022

OCR
Oxford Cambridge and RSA

Copyright Information

OCR is committed to seeking permission to reproduce all third-party content that it uses in its assessment materials. OCR has attempted to identify and contact all copyright holders whose work is used in this paper. To avoid the issue of disclosure of answer-related information to candidates, all copyright acknowledgements are reproduced in the OCR Copyright Acknowledgements Booklet. This is produced for each series of examinations and is freely available to download from our public website (www.ocr.org.uk) after the live examination series.

If OCR has unwittingly failed to correctly acknowledge or clear any third-party content in this assessment material, OCR will be happy to correct its mistake at the earliest possible opportunity.

For queries or further information please contact The OCR Copyright Team, The Triangle Building, Shaftesbury Road, Cambridge CB2 8EA.

OCR is part of Cambridge University Press & Assessment, which is itself a department of the University of Cambridge.

© OCR 2022