Oxford Cambridge and RSA

Friday 17 May 2019 – Morning

AS Level Physics B (Advancing Physics)

H157/02 Physics in depth

Time allowed: 1 hour 30 minutes

You must have:
- the Data, Formulae and Relationships Booklet (sent with general stationery)

You may use:
- a scientific or graphical calculator
- a ruler (cm/mm)

Please write clearly in black ink. **Do not write in the barcodes.**

Centre number | | | | | | Candidate number | | | | |

First name(s) _____

Last name _____

INSTRUCTIONS
- Use black ink. HB pencil may be used for graphs and diagrams.
- Answer **all** the questions.
- Where appropriate, your answers should be supported with working. Marks may be given for a correct method even if the answer is incorrect.
- Write your answer to each question in the space provided. If additional space is required, use the lined page(s) at the end of this booklet. The question number(s) must be clearly shown.

INFORMATION
- The total mark for this paper is **70**.
- The marks for each question are shown in brackets **[ ]**.
- Quality of extended responses will be assessed in questions marked with an asterisk (*).
- This document consists of **24** pages.

© OCR 2019 [601/4744/1]
DC (LK/TP) 173504/5
OCR is an exempt Charity

SECTION A

1 Fig. 1 is the stress-strain graph for a sample of steel which was extended until it fractured.

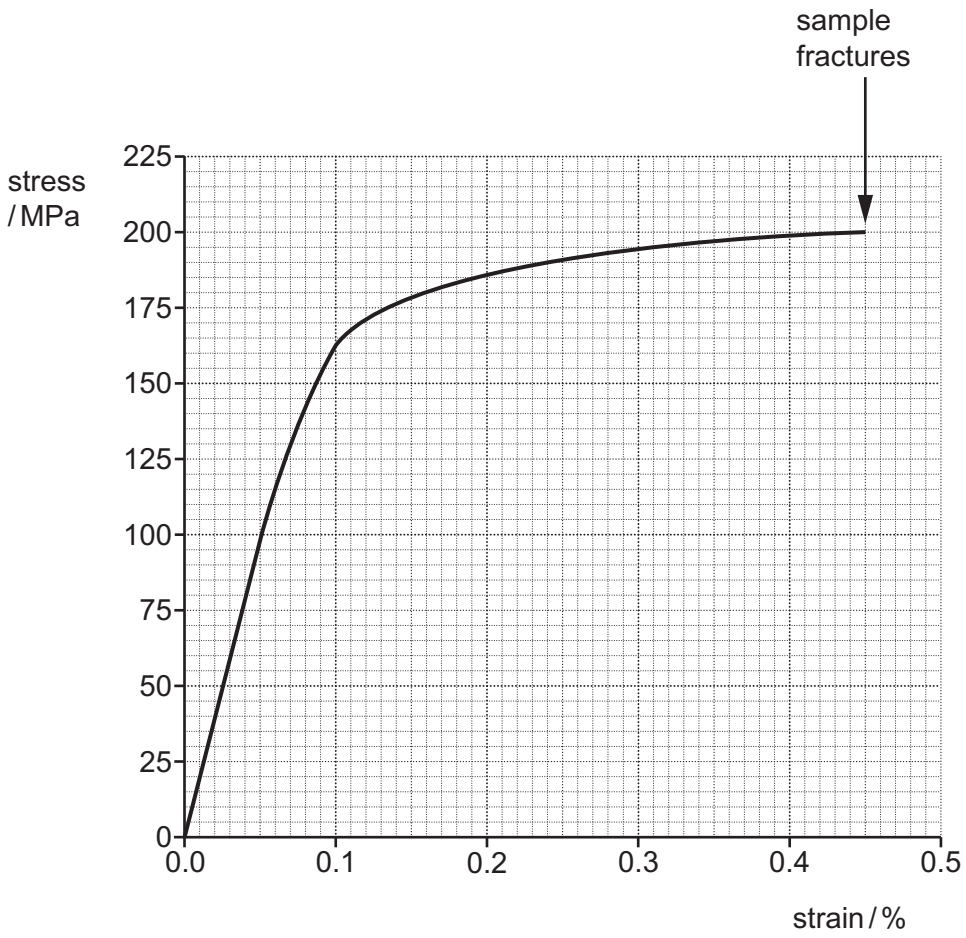

Fig. 1

The sample used to obtain these results was a cylindrical rod of length 31.0 cm and diameter 13.0 mm.

Use these data, together with the graph, to make the following calculations. Show your working clearly in each case.

(a) Calculate the length of the rod just before fracture. Express your answer to 3 significant figures.

length = ... cm **[2]**

© OCR 2019

(b) Calculate the force *F* that was required to produce a strain of 0.1%.

F = ... N **[3]**

(c) Calculate the Young modulus *E* for small strains.

E = ... Pa **[3]**

© OCR 2019

2 This question is about the absorption of light by rod-shaped sensitive cells in the retina of the human eye. Fig. 2 shows how efficiently these cells absorb light of different wavelengths across the range of visible light (400 – 700 nm).

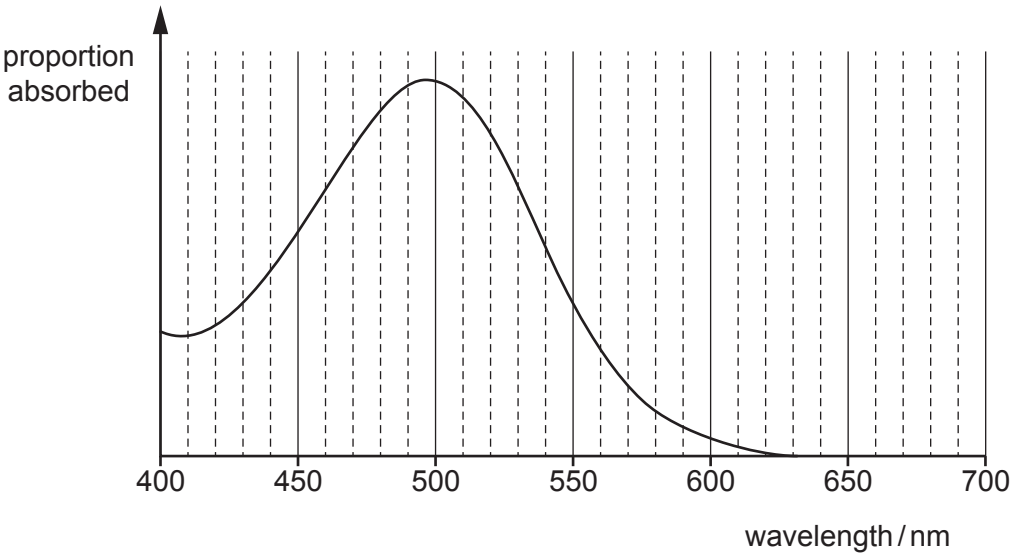

Fig. 2

(a) A typical rod cell can be activated (switched on) by a single photon.

Show that the energy required to activate a rod cell detecting light at the wavelength to which it is most sensitive is less than 5×10^{-19} J.

[3]

(b) The responses from neighbouring rod cells are added to send a signal to the brain. A constant light is seen coming from the direction viewed if at least twelve neighbouring cells are activated during a time interval of 100 ms.

Calculate the smallest value of power of visible light absorbed by rod cells to give a constant light signal.

power = ... W **[2]**

© OCR 2019

3 The comb shown in Fig. 3.1 has 53 teeth in a distance of 5.0 cm. It is mounted parallel to a wall 3.6 m away.

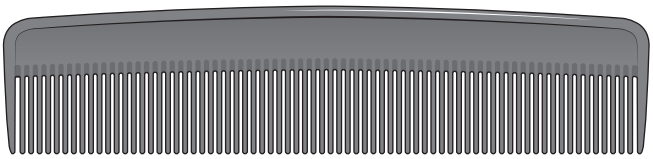

Fig. 3.1

A laser emitting light of wavelength 630 nm is set up perpendicular to the comb and produces an interference pattern of red dots on the distant wall as shown in Fig. 3.2.

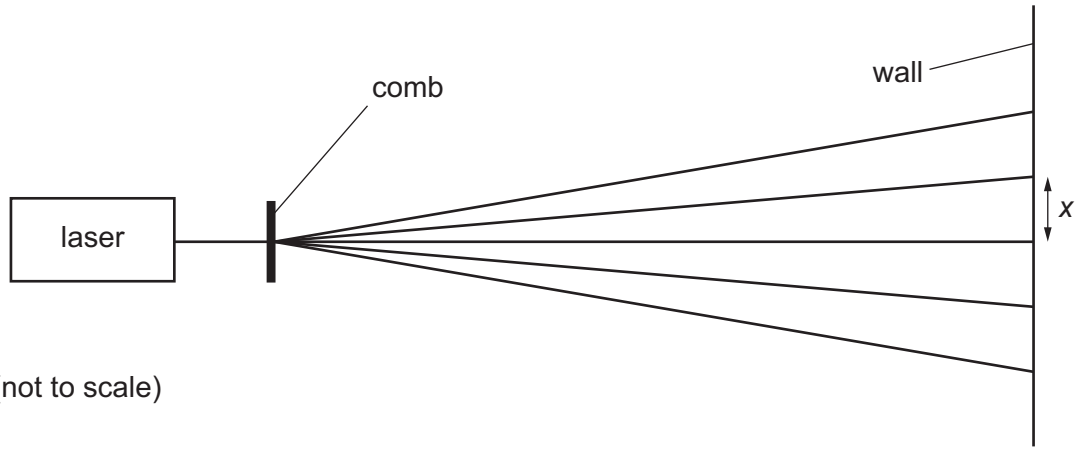

(not to scale)

Fig. 3.2

Calculate the separation *x* of the dots on the wall.

x = ... m **[3]**

© OCR 2019

4 The graph of Fig. 4 shows the current in each of two different components **A** and **B** when potential differences from 0 to 7.0 V are applied across them.

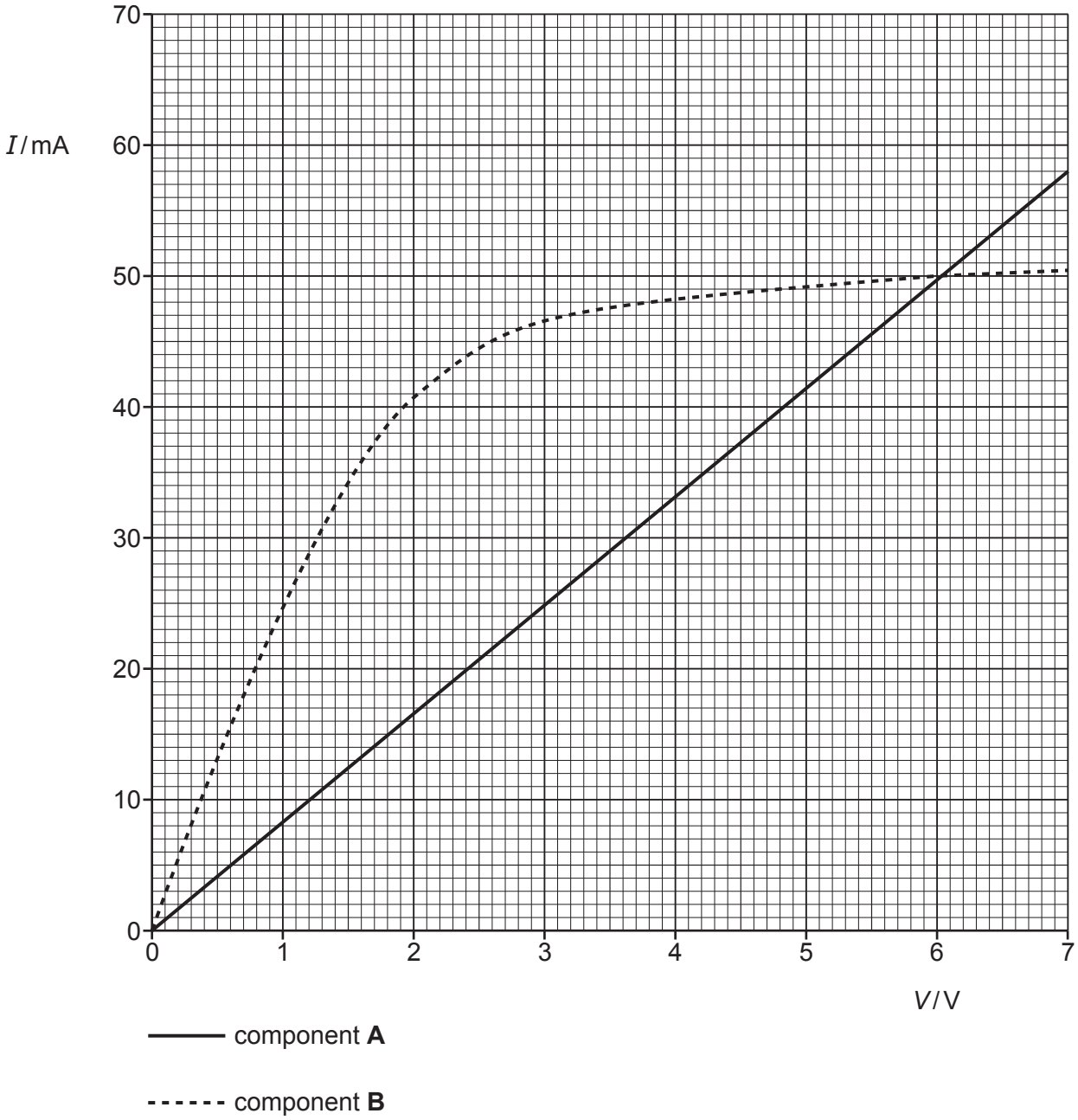

Fig. 4

© OCR 2019

(a) The two components are connected, in parallel, between the terminals of a battery of e.m.f. 3.0 V with negligible internal resistance.

Calculate the conductance of the parallel combination of **A** and **B** in this case. Show your working clearly.

conductance = ... S **[3]**

(b) **A** and **B** are now connected in series to a battery of e.m.f. 6.0 V with negligible internal resistance.

Explain why the graph of Fig. 4 shows that the current through **A** and **B** must be about 36 mA.

.....

.....

.....

..... **[2]**

© OCR 2019

5 Fig. 5 shows a trolley of weight 8.2 N rolling down a ramp inclined at 35° to the horizontal. You can assume that there is very little friction between the trolley and the ramp.

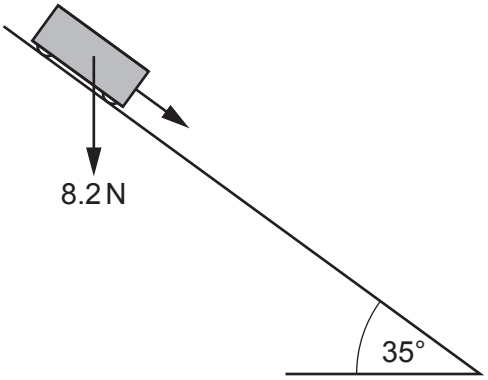

Fig. 5

(a) Calculate the acceleration *a* of the trolley along the ramp.

a = ... $m\,s^{-2}$ **[3]**

(b) Calculate the kinetic energy gained by the trolley as it travels 68 cm along the ramp.

kinetic energy gain = ... J **[1]**

© OCR 2019

SECTION B

6 This question is about the structure and properties of metals.

(a) Fig. 6.1 shows one layer of the crystal structure of copper metal. The copper atoms are all spherical.

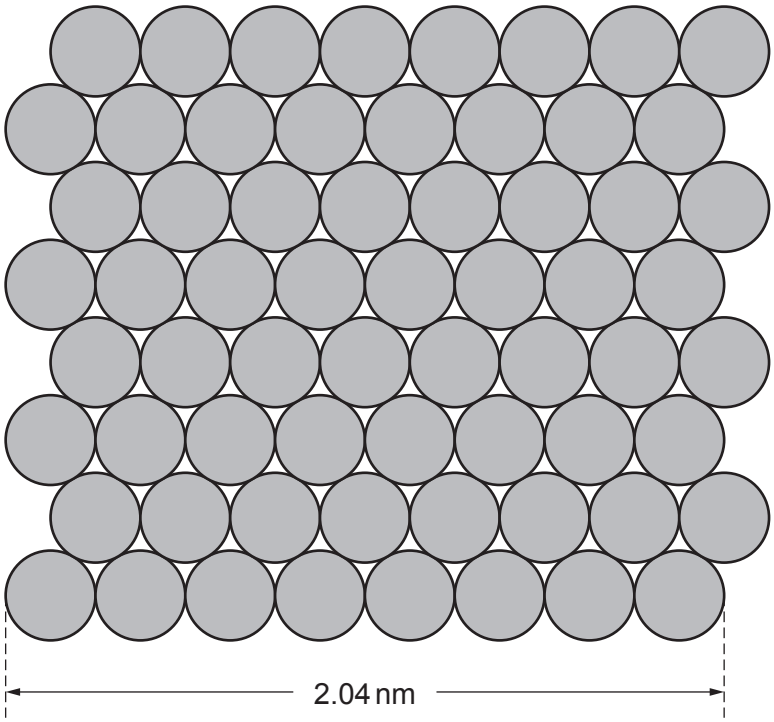

Fig. 6.1

The length of the bottom row of copper atoms was measured directly with a Scanning Tunneling Microscope.

(i) Use data from Fig. 6.1 to show that the volume V of a copper atom is about $9 \times 10^{-30}\,m^3$.

[3]

© OCR 2019

(ii) The mean molar mass of copper is 63.5 g.

1 mole of copper = N_A atoms, where $N_A = 6.02 \times 10^{23}$ atoms mol^{-1}.

Calculate the mean mass m of a single copper atom.

m = ... kg **[2]**

(iii) Density ρ is defined as the mass per unit volume of a material: $\rho = \frac{m}{V}$

Use the answers to **(i)** and **(ii)** to calculate the mean density of a copper atom.

mean density of a copper atom = ... kg m^{-3} **[1]**

(iv) The density of copper in the data book is 8920 kg m^{-3}.

Suggest and explain one reason for the difference between the value obtained in **(iii)** and the measured density of copper.

.....

.....

.....

..... **[2]**

(b)* One particular copper alloy consists of 95% copper and 5% zinc. The table compares the masses and sizes of the two atoms.

$\frac{\text{mass of zinc atom}}{\text{mass of copper atom}}$	$\frac{\text{diameter of zinc atom}}{\text{diameter of copper atom}}$
1.03	1.04

© OCR 2019

The structure of the alloy crystal is shown in Fig. 6.2.

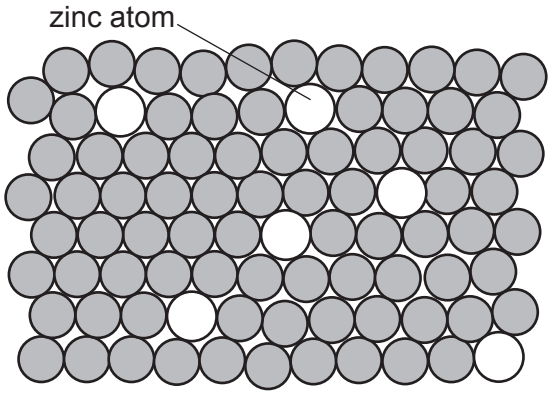

Fig. 6.2

This alloy is used to make coins.

Use the information from the table and Fig. 6.2 to suggest and explain differences between the physical properties of copper and this alloy and suggest and explain how these differences make the alloy more suitable than copper for making coins. **[6]**

.....

.....

.....

.....

.....

.....

.....

.....

.....

.....

.....

.....

.....

.....

.....

.....

Additional answer space is on next page if required

© OCR 2019

.....

.....

.....

.....

.....

7 This question is about the movement of a table-tennis ball falling in air.

On release, but before the ball starts moving, there are two forces acting on it:

- Its weight, *W*
- The upthrust, *U*, which is equal to the weight of air which would have occupied the space that the ball now occupies.

These forces are shown in Fig. 7.1

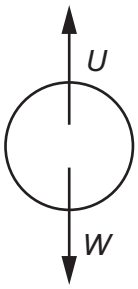

(not to scale)

Fig. 7.1

(a) Show that the upthrust *U* acting on a table-tennis ball in air of density 1.2 kg m^{-3} is less than 2% of the weight *W* of the ball.

weight of table-tennis ball = 0.026 N

volume of table-tennis ball = 3.4×10^{-5} m^3

[4]

© OCR 2019

(b) When the ball moves at a velocity v, it experiences a force D due to air drag given by

$$D = \tfrac{1}{2}\,\rho\, A\, C_d\, v^2$$

where ρ is the air density, A is the cross-sectional area of the ball, and C_d is a dimensionless constant called the drag coefficient.

radius of table-tennis ball = 0.020 m

density of air = 1.2 kg m^{-3}

the drag coefficient C_d = 0.4 for a table-tennis ball falling in air

Use the data above to calculate the drag force acting on a table-tennis ball at its **terminal velocity** of 9.3 m s^{-1} and explain why you would expect the drag to have this value.

D = ... N

.....

.....

.....

.....

.....

[3]

© OCR 2019

(c) The graph in Fig. 7.2 shows how the displacement *s* of the table-tennis ball changed with time *t* from the instant it was released.

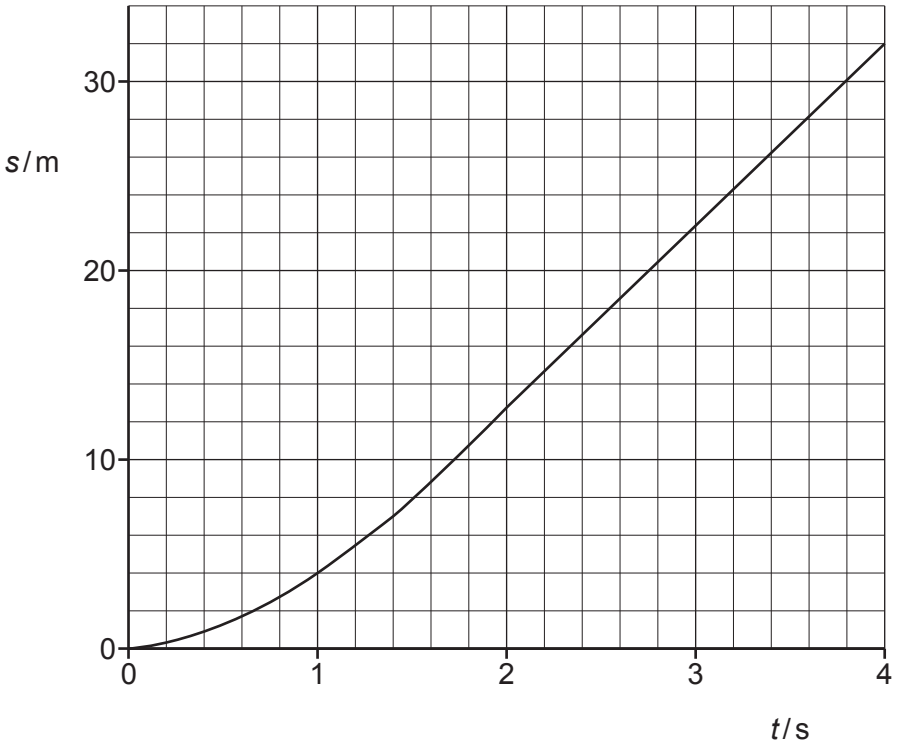

Fig. 7.2

(i) Calculate, as accurately as the data allow, the velocity *v* of the ball after it has fallen for 1 s.

Show your working.

v = ... m s^{-1} **[3]**

(ii) State how the graph shows that the ball has reached its terminal velocity within about 3 s of being released.

.....

.....

..... **[1]**

© OCR 2019

(d) Explain how the way in which a table-tennis ball falls would be different if it were dropped in an atmosphere of argon, which is denser and has a larger drag coefficient than air. You should refer to upthrust and to the equation $D = ½ \rho A C_d v^2$ in your answer.

.....

.....

.....

.....

.....

.....

.....

.....

.....

.....

..... **[4]**

© OCR 2019

SECTION C

8 Lizzie has bought a new lens for her camera. It is marked with the focal length 50 mm (Fig. 8.1).

She wants to measure its focal length as accurately as possible to see if this value is correct.

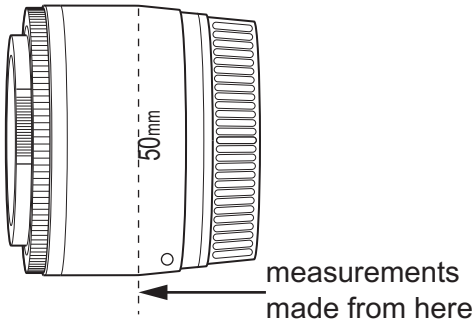

Fig. 8.1

(a) The lens is made up of several different parts fixed inside a plastic case, and Lizzie cannot tell exactly where the centre of the lens is. She decides to make measurements from the top of the '5' as shown.

Lizzie realises that measuring from this point may introduce a systematic error in her data. Explain the term *systematic error* and state how it will affect values of the object distance *u* and the image distance *v* that she obtains.

.....

.....

.....

.....

.....

.....

.....

..... **[3]**

© OCR 2019

(b) Lizzie uses the arrangement in Fig. 8.2 to measure object (u) and image (v) distances.

As an object, she marks a black letter **X** on a thin sheet of paper.

The image is formed on a sheet of white card.

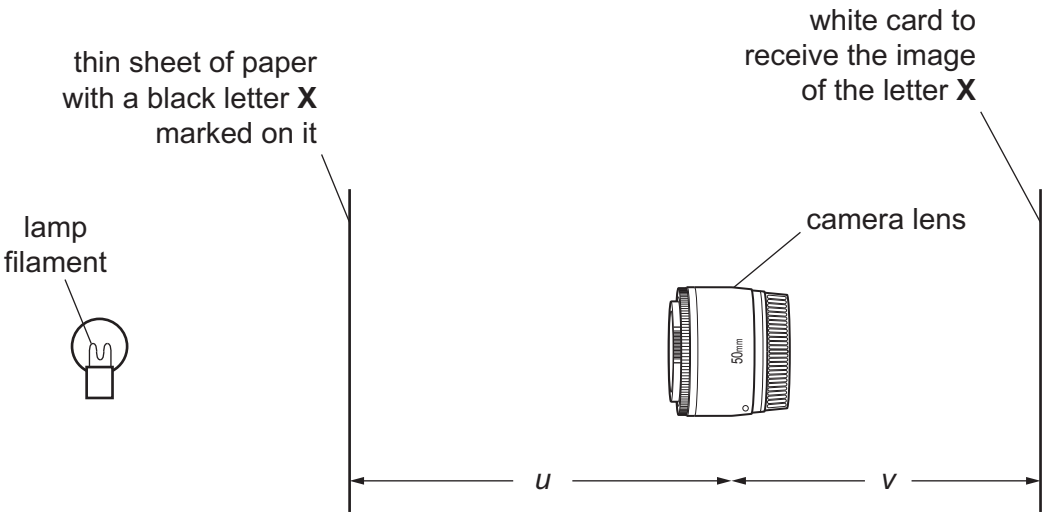

Fig. 8.2

Lizzie finds that a clear image can be seen on the white card over a range of values of v. She records this for four repeats at each chosen image position.
Here are her results for $u = -37$ cm.

smallest v / cm	34	35	34	36
largest v / cm	41	41	40	42

Use these data to find the best estimate of v and Δv for $u = -37$ cm.
Explain your working.

v = ... ± ..... cm **[2]**

© OCR 2019

(c) Show that the lens equation for a converging lens of power P should result in a straight-line graph with gradient 1 and y-axis intercept P if $\frac{1}{v}$ is plotted on the y-axis for a range of values of $\frac{1}{u}$ on the x-axis.

[2]

(d) In her experiment, Lizzie obtains the following set of values of v and Δv for each chosen value of u.

Complete the last two columns and plot the missing data on the graph opposite.

u / m	v / m	Δv / m	$\frac{1}{u}$ / m^{-1}	$\frac{1}{v}$ / m^{-1}	$\Delta\left(\frac{1}{v}\right)$ / m^{-1}
–0.080	0.37	0.04	–12.5	2.70	0.3
–0.085	0.24	0.03	–11.8	4.17	0.5
–0.090	0.18	0.03	–11.1	5.55	0.9
–0.10	0.13	0.02	–10.0	7.69	1
–0.11	0.10	0.02	–9.09	10.0	2
–0.12	0.088	0.01	–8.33	11.4	2
–0.14	0.072	0.008	–7.14		
–0.16	0.063	0.007	–6.25		

[3]

© OCR 2019

(e)* Use the graph to find the maximum and minimum values of the gradient and the *y*-axis intercept and to evaluate the findings of the experiment. There is lined answer space for your evaluation on the following page. **[6]**

© OCR 2019

Additional answer space if required

END OF QUESTION PAPER

© OCR 2019

ADDITIONAL ANSWER SPACE

If additional space is required, you should use the following lined page(s). The question number(s) must be clearly shown in the margin(s).

© OCR 2019

© OCR 2019

© OCR 2019

OCR
Oxford Cambridge and RSA

Copyright Information

OCR is committed to seeking permission to reproduce all third-party content that it uses in its assessment materials. OCR has attempted to identify and contact all copyright holders whose work is used in this paper. To avoid the issue of disclosure of answer-related information to candidates, all copyright acknowledgements are reproduced in the OCR Copyright Acknowledgements Booklet. This is produced for each series of examinations and is freely available to download from our public website (www.ocr.org.uk) after the live examination series.

If OCR has unwittingly failed to correctly acknowledge or clear any third-party content in this assessment material, OCR will be happy to correct its mistake at the earliest possible opportunity.

For queries or further information please contact The OCR Copyright Team, The Triangle Building, Shaftesbury Road, Cambridge CB2 8EA.

OCR is part of the Cambridge Assessment Group; Cambridge Assessment is the brand name of University of Cambridge Local Examinations Syndicate (UCLES), which is itself a department of the University of Cambridge.

© OCR 2019