Oxford Cambridge and RSA

AS Level Physics B (Advancing Physics)

H157/02 Physics in depth

Friday 18 May 2018 – Morning

Time allowed: 1 hour 30 minutes

You must have:
- the Data, Formulae and Relationships Booklet (sent with general stationery)

You may use:
- a scientific or graphical calculator
- a ruler (cm/mm)

First name	
Last name	StemUp Model Solution

Centre number						Candidate number				

INSTRUCTIONS
- Use black ink. HB pencil may be used for graphs and diagrams.
- Complete the boxes above with your name, centre number and candidate number.
- Answer **all** the questions.
- Write your answer to each question in the space provided. If additional space is required, use the lined page(s) at the end of this booklet. The question number(s) must be clearly shown.
- Do **not** write in the barcodes.

INFORMATION
- The total mark for this paper is **70**.
- The marks for each question are shown in brackets **[ ]**.
- Quality of extended responses will be assessed in questions marked with an asterisk (*).
- This document consists of **16** pages.

© OCR 2018 [601/4744/1]
DC (ST/CGW) 172047/4 **R**
OCR is an exempt Charity

stemup.co.uk

SECTION A

Answer **all** the questions.

1 A book is held 25 cm from an eye. This is the smallest distance from an object for which a normal eye can form a clear image.
Light is refracted by the cornea and the lens together, and a clear image is formed on the sensitive retina, 2.1 cm behind the lens.
The ray diagram for this arrangement is shown in Fig. 1.

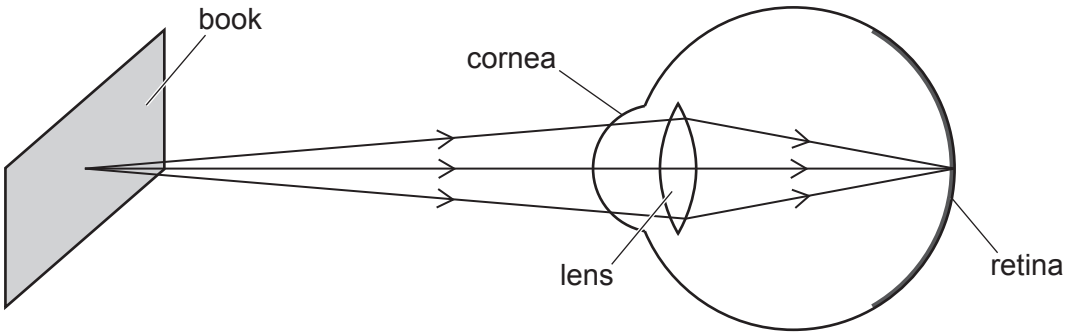

Fig. 1

(a) Calculate the power *P* of the combination of the cornea and the lens.

$1/v = 1/u + P$, so $P = 1/v - 1/u$ ($u = -0.25$ m, $v = +0.021$ m)

$P = 1/0.021 - 1/(-0.25)$

$P = 47.6 + 4.0 = 51.6$ D

P = ...52..... D **[2]**

(b) The sensitive cells at the centre of the retina are separated by 2.5 μm.
Calculate the distance *d* on the book that would correspond to this separation in the image on the retina.

magnification = $v/|u|$ = 2.1 cm ÷ 25 cm = 0.084

$d = 2.5 \times 10^{-6}$ m ÷ 0.084 = 2.98×10^{-5} m

d = ...3.0×10^{-5}..... m **[2]**

(c) A long-sighted person cannot focus on an object 25 cm from the eye. Carol is long-sighted and the closest object that forms a sharp image on her retina is 1.5 m from the eye.
Explain why Carol has difficulty reading small print in a book when she is not using her glasses.

A book is held about 25 to 30 cm away, much closer than 1.5 m, so it is blurred.....

At 1.5 m, $v/|u|$ = 2.1 cm/150 cm, 6 times smaller than at 25 cm, so resolution is.....

6 times poorer (1.8×10^{-4} m): small print cannot be resolved..... **[2]**

© OCR 2018

2 A modern digital television has a screen measuring 1280 pixels by 720 pixels (Fig. 2).

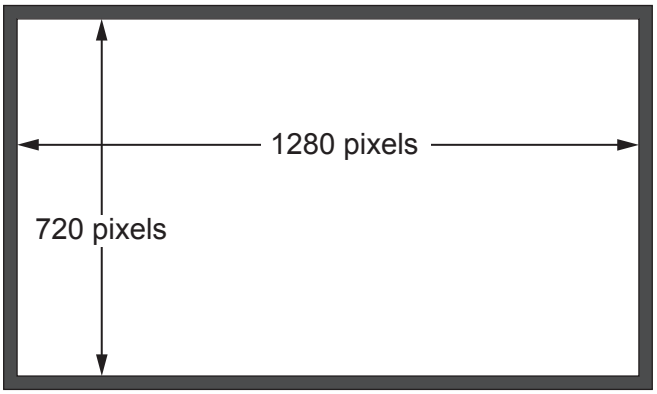

Fig. 2

(a) Each pixel is encoded by 3 bytes, one for each of the colours red, green and blue. A new image is displayed on the screen 30 times each second.

Calculate the number of gigabytes needed to encode a high-definition video lasting for one hour. You can assume that every pixel must be encoded every time a new image appears on the screen.

bytes per screen = 1280 × 720 × 3 = 2.76×10^6 B

number of screens = 30 × 60 × 60 = 108 000

total = 108 000 × 2.76×10^6 B = 2.99×10^{11} B

number = ...299..... GB **[2]**

(b) When this one-hour high-definition video is downloaded, it takes up 13 GB on the digital storage. This value is much smaller than the value calculated in **(a)**.

Suggest and explain **one** reason for this.

The signal is compressed. Not every pixel needs encoding every time: only the changes from the last screen are encoded, and areas of similar adjacent pixels are not encoded pixel by pixel.

..... **[2]**

© OCR 2018

stemup.co.uk

3 Fig. 3 shows a lift designed for a very tall building.

It consists of a 'cage' that can hold up to eight passengers. The total mass of the cage and passengers must not exceed 1200 kg. The cage is supported by a steel cable of cross-sectional area $2.8 \times 10^{-3}\,m^2$ and density $7800\,kg\,m^{-3}$.

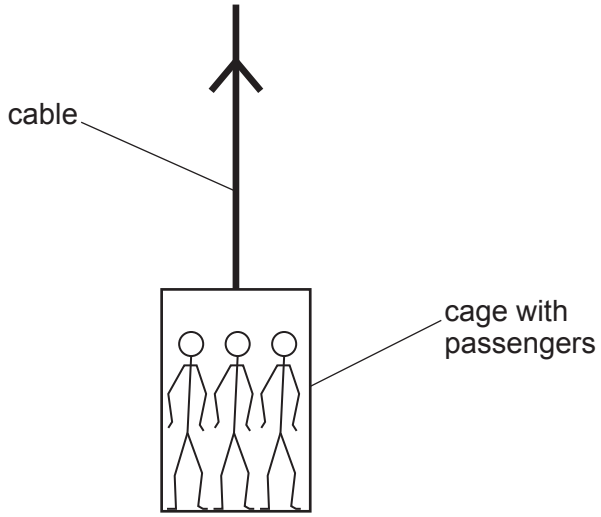

Fig. 3

(a) The lift cable is 420 m long when completely unwound.
Calculate the tensile stress at the **top** of the cable, when it is completely unwound and supporting a fully-loaded cage.

$g = 9.8\,m\,s^{-2}$

density $\rho = \dfrac{\text{mass}}{\text{volume}}$

cable mass = $420 \times 2.8 \times 10^{-3} \times 7800 = 9170$ kg

total weight = $(9170 + 1200) \times 9.8 = 1.02 \times 10^5$ N

stress = 1.02×10^5 N $\div$ 2.8×10^{-3} m^2 = 3.6×10^7 Pa

stress = ...3.6×10^7..... Pa **[3]**

(b) Explain why it is incorrect to use the value of the stress calculated in **(a)** and the equation $E = \dfrac{\text{stress}}{\text{strain}}$ to calculate the extension of the cable.

The stress is a maximum at the top as it includes the weight of all the cable; the bottom of the cable holds only the cage and passengers. The mean stress along the cable is less, so the strain and extension will be less than predicted from E, L and the stress in (a). **[2]**

© OCR 2018

4 A small rocket of mass 0.27 kg is mounted vertically on the ground. Exhaust gases emerge at high speed from the rocket, as shown in Fig. 4.

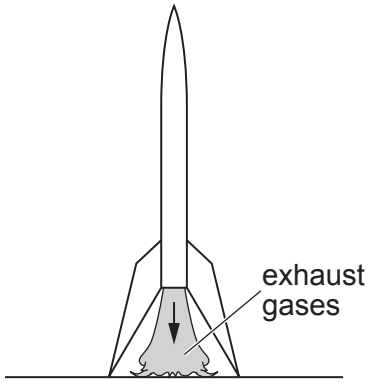

Fig. 4

(a) At the start, the gases are ejected at a rate of 47 g s^{-1} with a speed of 110 m s^{-1} relative to the rocket and the ground.
Show that the rocket exerts a downwards force of about 5 N on the exhaust gases.

momentum given to gas per second = 0.047 kg s^{-1} × 110 m s^{-1}

$\Delta p/\Delta t$ = 5.17 kg m s^{-1} per second

force = rate of change of momentum, $F = \Delta p/\Delta t$ = 5.17 N ≈ 5 N

[2]

(b) Calculate the initial upward acceleration of the rocket.
g = 9.8 m s^{-2}

resultant upward force = 5.17 − 0.27 × 9.8 = 2.52 N

$a = F/m$ = 2.52 N ÷ 0.27 kg = 9.34 m s^{-2}

acceleration = ...9.3..... m s^{-2} **[2]**

(c) Explain why this acceleration is correct only at the instant when the rocket engine starts.

As the rocket climbs, fuel is burnt and ejected, so the rocket's mass drops and the same force produces a larger acceleration. Also air resistance increases as it moves faster, and the rate of ejection of gas changes as the fuel runs out. **[2]**

© OCR 2018

stemup.co.uk

5 A simple model of a gas atom consists of separate energy levels, as shown in Fig. 5.

In this model, there are three levels, **A**, **B** and **C**. The vertical separation between levels is proportional to the energy differences between the levels, showing that these energy differences are not uniform.

The electrons of the atom, shown as black dots, can have any of these three energies, but cannot have any other energy.

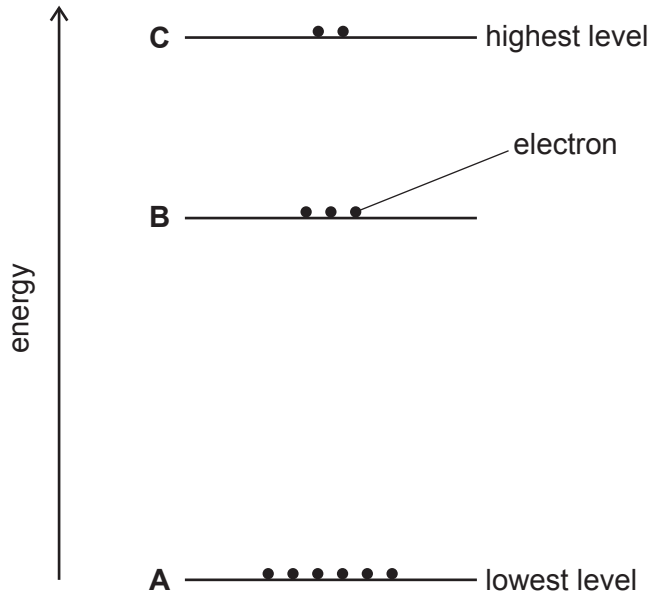

Fig. 5

When one atom absorbs exactly the right amount of energy, an electron can 'jump up' from one level to a higher level.
When an electron "falls" from a higher level to a lower level a photon will be emitted. The energy of this photon will be the energy difference between those two levels.

(a) State why the spectrum of light emitted by excited atoms of this gas will contain exactly three different frequencies.

There are 3 transitions: C to B, C to A and B to A. Each transition corresponds to a single energy and therefore a single frequency ($f = E/h$). **[2]**

(b) In the spectrum of this gas, the longest wavelength of light emitted is 650 nm. Calculate the energy released by a falling electron and state the two levels between which the electron has fallen.

speed of light, $c = 3.0 \times 10^8\,\mathrm{m\,s^{-1}}$
the Planck constant, $h = 6.6 \times 10^{-34}\,\mathrm{J\,s}$

$f = c/\lambda = 3.0 \times 10^8 \div 650 \times 10^{-9} = 4.62 \times 10^{14}$ Hz

$E = hf = 6.6 \times 10^{-34} \times 4.62 \times 10^{14} = 3.05 \times 10^{-19}$ J

longest λ means the smallest energy fall, so from C to B

energy = 3.0×10^{-19} J

the electron fell from level C to level B **[3]**

© OCR 2018

SECTION B

Answer **all** the questions.

6 Fig. 6.1 represents a cell of e.m.f. ε and internal resistance r. **A** and **B** are the positive and negative terminals of the cell.

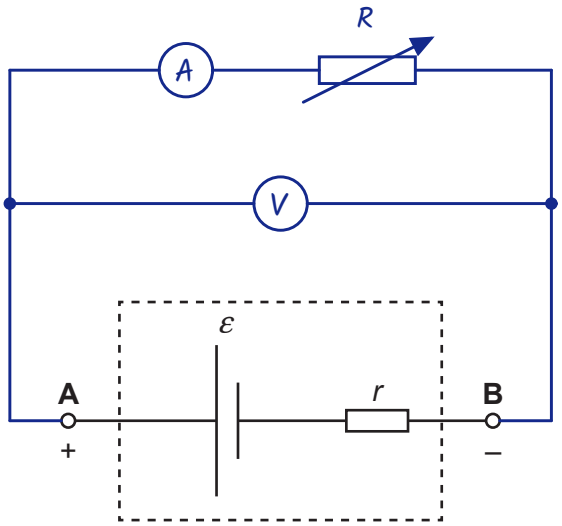

Fig. 6.1

(a)* Complete the circuit diagram of Fig. 6.1, adding appropriate meters and a variable resistor, to show how you could determine values of ε and r. Describe and explain the procedure you would use to determine accurate values of ε and r and their uncertainties.

The voltmeter across A and B measures the terminal p.d. V; the ammeter in series with the variable resistor R measures the current I.

Vary R from its largest to a small value to get at least six pairs of V and I readings over as wide a range of current as possible; repeat each and take means. Switch off between readings so the cell does not warm up, as r may change with the current drawn.

Since V = ε – Ir, plot V (y-axis) against I (x-axis) and draw the best-fit straight line.

The intercept on the V-axis (at I = 0) gives ε, and the gradient is –r, so r = –gradient.

Uncertainties: add error bars from the spread of repeats, then draw the steepest and least steep lines that still fit the data. Half the difference between their V-intercepts gives the uncertainty in ε, and half the difference between their gradients gives the uncertainty in r.

..... **[6]**

© OCR 2018

stemup.co.uk

(b) A battery-powered appliance has a rechargeable battery consisting of two lithium-ion cells in series. Each cell has an e.m.f. $\varepsilon = 3.6\,\text{V}$ and an internal resistance $r = 0.32\,\Omega$.

The capacity of this battery is 1200 mAh, meaning that a fully-charged battery can deliver an average current of 1200 mA for an hour before it is completely discharged.

A fully-charged battery of this type is connected to an external load of resistance $5.2\,\Omega$ until it is completely discharged. You can assume that the e.m.f. ε is constant throughout the discharge.

(i) Show that a charge of about 4 kC flows during this discharge.

$Q = It = 1200 \times 10^{-3}\ A \times 3600\ s$

$Q = 4320\ C \approx 4\ kC$

[1]

(ii) Calculate the time taken for the discharge.

total resistance $= R + 2r = 5.2 + 2 \times 0.32 = 5.84\ \Omega$

$I = 2\varepsilon/(R + 2r) = (2 \times 3.6\ V) \div 5.84\ \Omega = 1.233\ A$

$t = Q/I = 4320\ C \div 1.233\ A = 3504\ s$

time = ...3500..... s **[3]**

(iii) Show that the percentage efficiency of energy transfer to the load resistance R is given by

$$\text{percentage efficiency} = 100 \times \frac{R}{R + 2r}$$

where r is the internal resistance of one of the battery cells.

the same current I flows through R and both cells (total internal resistance $2r$)

energy dissipated in the load $R = I^2Rt$

total energy dissipated $= I^2(R + 2r)t$

efficiency $= I^2Rt \div I^2(R + 2r)t = R/(R + 2r)$

so percentage efficiency $= 100 \times R/(R + 2r)$

[3]

© OCR 2018

(c) Lithium-ion rechargeable batteries are used for a large number of charge-discharge cycles.

Fig. 6.2 shows how the energy stored in such a battery changes with the number of charge-discharge cycles. This is shown for two discharge currents: 2A and 15A. In this graph, a relative capacity of 100% refers to the energy stored when the battery is first charged.

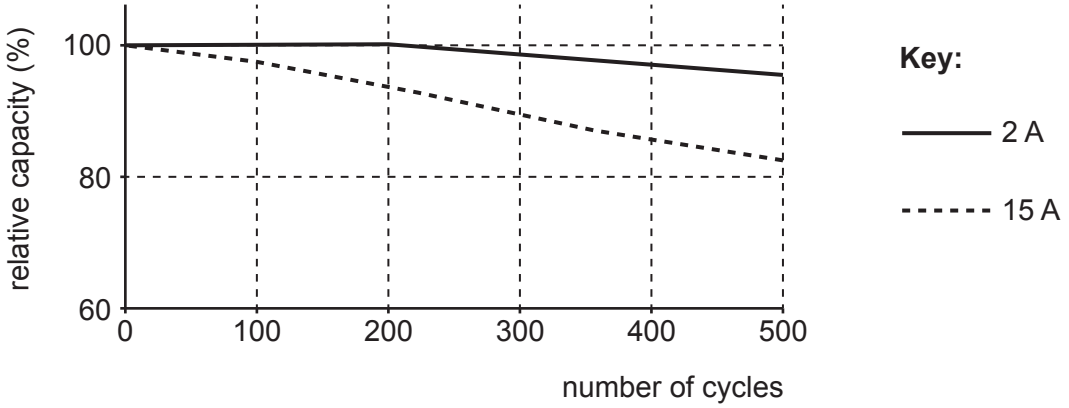

Fig. 6.2

Use the information in Fig. 6.2 to discuss the suitability of this type of battery for a mobile phone and for an electric car.

The relative capacity falls as the number of charge-discharge cycles increases, and it falls much more at the higher current: after 500 cycles about 96% at 2 A but only about 83% at 15 A. A mobile phone draws a low current, so the battery keeps most of its capacity and is suitable; an electric car draws a high current, so its capacity (range) falls quickly, making it less suitable. **[3]**

© OCR 2018

stemup.co.uk

7 This question is about the standing waves that produce the musical notes in string instruments.

(a) A double bass is a large musical instrument with four strings of the same vibrating length L but different thicknesses. Notes are produced by moving a bow perpendicular to the string (Fig. 7.1).

This question considers only the thickest string of the double bass, which produces the lowest notes.

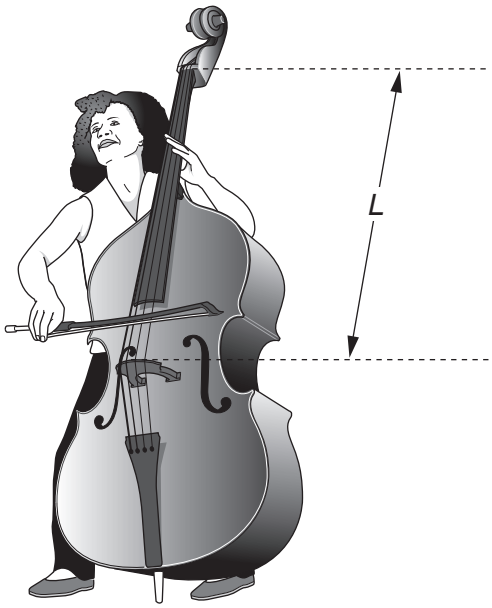

Fig. 7.1

(i) The length L = 0.980 m and the frequency f_0 of the fundamental note produced by the thickest string is 41.2 Hz.
Show that the waves travelling along the string have a speed of less than 100 m s^{-1}.

fundamental: string length is half a wavelength, $\lambda = 2L$

$\lambda = 2 \times 0.980$ m $= 1.96$ m

$v = f\lambda = 41.2$ Hz $\times 1.96$ m

$v = 80.8$ m s^{-1}, which is less than 100 m s^{-1}

[2]

© OCR 2018

(ii) A player can produce a harmonic (a note of higher frequency) by touching the string **lightly** at a certain point to make the string vibrate with zero amplitude at that point. This point must be a whole fraction of L from one end of the string, e.g. one-half, one-third, etc. of the way along.

The player produces a note of frequency f about 200 Hz on this thickest string by touching it at a distance x of about 20 cm from one end.

Using appropriate scientific terms, explain why this higher frequency is produced, and calculate the values of x and f to an appropriate number of significant figures.

Bowing sets up a standing (stationary) wave. Touching the string forces a node at that point as well as at the ends, so only a higher harmonic with a shorter wavelength can form.

The point is a whole fraction of L near 20 cm: L/5 = 0.980/5 = 0.196 m, so there are 5 loops, λ = 2L/5 and f = 5f_0 = 5 × 41.2 = 206 Hz.

x = ...19.6..... cm f = ...206..... Hz **[4]**

(iii) The fundamental frequency f_0 of the note produced by a vibrating string of length L is given by the equation

$$f_0 = \frac{1}{2L}\sqrt{\frac{T}{\rho A}}$$

where T is the tension of the string, A its cross-sectional area and ρ the density of the material of which it is made.
Calculate the diameter of the thickest string, which has a tension of 290 N and a mean density of 8100 kg m^{-3}.

$f_0^2 = T/(4L^2\rho A)$, so $A = T/(\rho(2Lf_0)^2)$

$A = 290 \div (8100 \times (2 \times 0.98 \times 41.2)^2) = 5.49 \times 10^{-6}$ m^2

$A = \pi d^2/4$, so $d = \sqrt{(4A/\pi)} = \sqrt{(4 \times 5.49 \times 10^{-6} \div \pi)}$

$d = 2.64 \times 10^{-3}$ m

diameter = ...2.6 × 10^{-3}..... m **[3]**

© OCR 2018

stemup.co.uk

(b) A bass guitar (Fig. 7.2) has four strings that produce notes of the same frequencies as the four strings of the double bass. The strings are not played with a bow like a double bass. They are pulled perpendicular to the string and released (plucked) just as on an ordinary guitar.

As in part **(a)**, part **(b)** considers only the thickest string of the instrument.

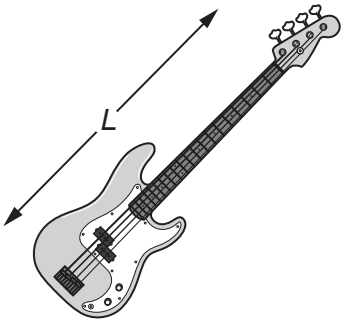

Fig. 7.2

(i) Use the equation given in **(a)(iii)** to show that, for strings producing the same fundamental frequency f_0,

$$\rho A \propto \frac{T}{L^2}.$$

Show your working clearly and explain your reasoning.

$f_0 = (1/2L)\sqrt{(T/\rho A)}$, so $4L^2f_0^2 = T/\rho A$ and $A = T/(4\rho f_0^2L^2)$

f_0 and ρ are the same for both strings, so $4\rho f_0^2$ is constant

therefore $A \propto T/L^2$

[2]

(ii) The thickest string on the bass guitar is 0.86 m long and is at a tension of 190 N.

You can assume that this string has the same mean density as a double bass string, which is 0.98 m long and is at a tension of 290 N.

By considering the ratio $\frac{T}{L^2}$ for the thickest strings on each instrument, discuss how the two strings will differ, and how plucking a double bass string would feel different from plucking a bass guitar string of the same fundamental frequency. You may include calculations in your answer.

Double bass: $T/L^2 = 290/0.98^2 = 302$ N m^{-2}; bass guitar: $190/0.86^2 = 257$ N m^{-2}. T/L^2 is greater for the double bass, so as $A \propto T/L^2$, the bass guitar string has a smaller area A and so a smaller diameter d (thinner string). The double bass string is thicker and tauter (higher tension), so it is harder to pluck: a larger force is needed to pull it aside. **[3]**

© OCR 2018

SECTION C

Answer **all** the questions.

8 Two students, Alice and Bob, are using a diffraction grating to determine the wavelength of light emitted by a light-emitting diode (LED).

Bob places a ruler a distance x behind the grating and Alice observes the positions on the ruler corresponding to the straight-through beam (**A**) and the first-order diffracted beams (**B** and **C**), as shown in Fig. 8.1.

y_1 and y_2 are the observed values of y, the displacement on the ruler of **C** and **B** from **A**.

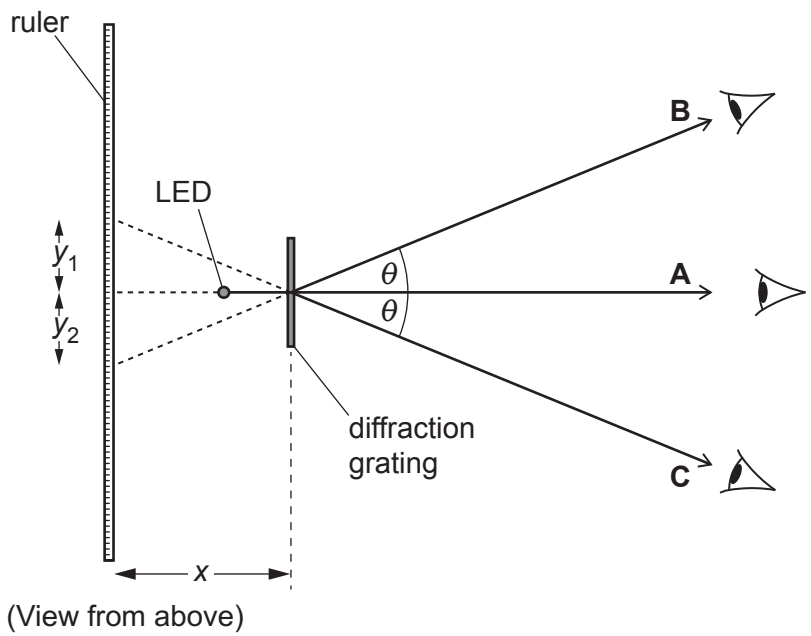

Fig. 8.1

(a) By measuring the distances y_1 and y_2, Alice and Bob intend to find the angle θ of first-order diffraction maximum.

(i) For this LED, Alice and Bob obtain the following data for the first-order maximum.

	reading 1	reading 2	reading 3
y_1 / cm	5.9	6.2	6.1
y_2 / cm	6.1	5.9	6.3

Use the table to calculate the mean value of y and its uncertainty.

mean = (5.9 + 6.2 + 6.1 + 6.1 + 5.9 + 6.3) ÷ 6 = 6.08 cm

uncertainty = ½ range = ½ (6.3 − 5.9) = 0.2 cm

mean = ...6.1..... cm

uncertainty = ...0.2..... cm **[3]**

© OCR 2018

stemup.co.uk

(ii) Explain why repeating the measurements at least three times is good experimental practice.

More readings allow anomalies (outliers) to be seen and repeated; with only 2 readings you cannot tell which is the outlier. It checks repeatability and gives a more accurate mean. **[2]**

(iii) Describe how Alice and Bob could use the values obtained in part **(a)(i)** to find the mean frequency of the light from the LED. You do not need to do any calculations.

Take y as the mean of y_1 and y_2. Use $\tan\theta = y/x$ to find θ. Use the grating equation $n\lambda = d\sin\theta$ with $n = 1$ and the grating spacing d to find λ. Then use $c = f\lambda$ to find $f = c/\lambda$. **[3]**

(b)* Repeating the experiment for different LEDs, Bob used their data to plot the graph of Fig. 8.2.

The values of E, the minimum energy needed to emit a photon, were obtained by measuring the minimum p.d. that would allow the LED in question to emit light. The gradient of the best-fit straight line should be the Planck constant, h.

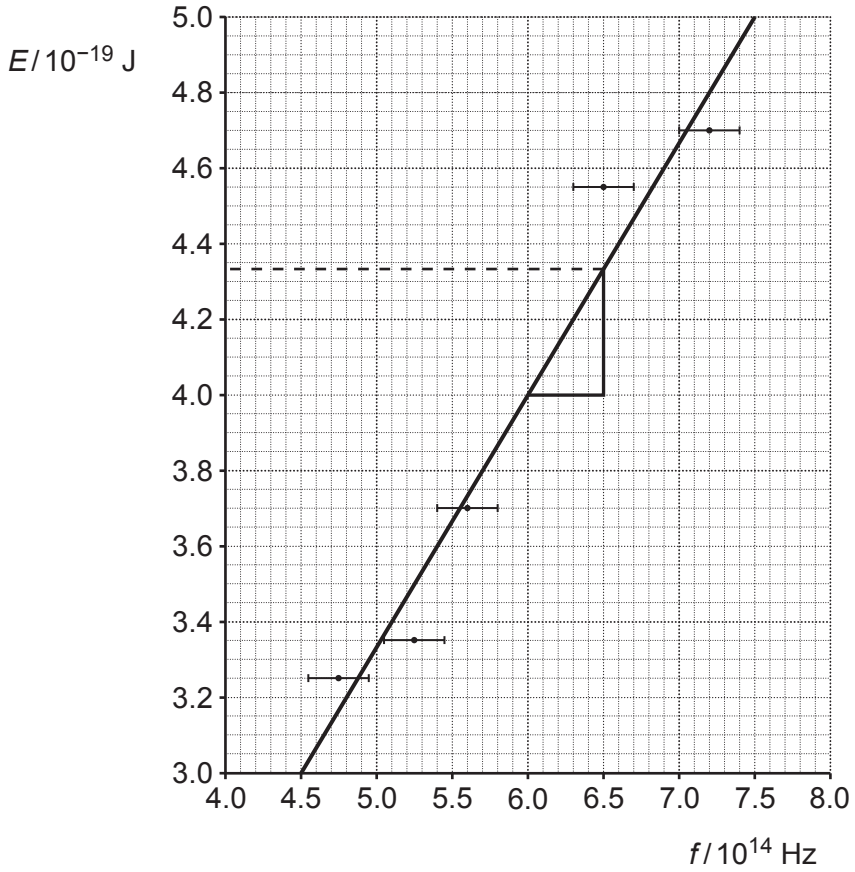

Fig. 8.2

© OCR 2018

Bob's analysis is shown on the graph of Fig. 8.2 and in the box following.

$$h = \text{gradient} = \frac{4.33 \times 10^{-19} - 4.0 \times 10^{-19}}{0.5 \times 10^{14}} = 6.6 \times 10^{-34}\ \text{J s}.$$

This is exactly the same as the data book, so the experiment worked well.

Evaluate his analysis of the data from the experiment.

His calculation is correct, the value of h is close to the expected value and the best-fit line is reasonable. But the gradient triangle is too small, so reading errors are large; a large triangle gives $(5.0 - 3.0) \times 10^{-19} \div (7.5 - 4.5) \times 10^{14} = 6.7 \times 10^{-34}$ J s. The spread of the data is larger than the uncertainty bars suggest: the line misses several bars and the point at 4.55×10^{-19} J is well off the line, so the data may have errors or the uncertainties are underestimated. Uncertainties in E are ignored, though these could be significant. There is no attempt to find the uncertainty in h, so he cannot claim an exact match. He should draw the steepest and least steep lines to get the range of h (or use % uncertainties), check the anomalous point and take extra readings with more LEDs. **[6]**

END OF QUESTION PAPER

© OCR 2018

ADDITIONAL ANSWER SPACE

If additional space is required, you should use the following lined page(s). The question number(s) must be clearly shown in the margin(s).

OCR
Oxford Cambridge and RSA

Copyright Information

OCR is committed to seeking permission to reproduce all third-party content that it uses in its assessment materials. OCR has attempted to identify and contact all copyright holders whose work is used in this paper. To avoid the issue of disclosure of answer-related information to candidates, all copyright acknowledgements are reproduced in the OCR Copyright Acknowledgements Booklet. This is produced for each series of examinations and is freely available to download from our public website (www.ocr.org.uk) after the live examination series.

If OCR has unwittingly failed to correctly acknowledge or clear any third-party content in this assessment material, OCR will be happy to correct its mistake at the earliest possible opportunity.

For queries or further information please contact the Copyright Team, First Floor, 9 Hills Road, Cambridge CB2 1GE.

OCR is part of the Cambridge Assessment Group; Cambridge Assessment is the brand name of University of Cambridge Local Examinations Syndicate (UCLES), which is itself a department of the University of Cambridge.

© OCR 2018