Oxford Cambridge and RSA

AS Level Physics B (Advancing Physics)

H157/01 Foundations of physics

Tuesday 15 May 2018 – Morning

Time allowed: 1 hour 30 minutes

You must have:
- the Data, Formulae and Relationships Booklet (sent with general stationery)

You may use:
- a scientific or graphical calculator
- a ruler (cm/mm)

First name	
Last name	StemUp Model Solution

Centre number						Candidate number				

INSTRUCTIONS
- Use black ink. HB pencil may be used for graphs and diagrams.
- Complete the boxes above with your name, centre number and candidate number.
- Answer **all** the questions.
- Write your answer to each question in the space provided. If additional space is required, use the lined page(s) at the end of this booklet. The question number(s) must be clearly shown.
- Do **not** write in the barcodes.

INFORMATION
- The total mark for this paper is **70**.
- The marks for each question are shown in brackets **[ ]**.
- This document consists of **28** pages.

© OCR 2018 [601/4744/1]
DC (ST/JG) 156725/5
OCR is an exempt Charity

stemup.co.uk

SECTION A

You should spend a maximum of 25 minutes on this section.

Answer **all** the questions.

Write your answer to each question in the box provided.

1 Which of the following correctly describes ceramic materials?

A ductile

B plastic

C stiff

D tough

Your answer C

[1]

2 The sum of the currents entering a junction is equal to the sum of the currents leaving the junction.

This is the principle of conservation of which quantity?

A charge

B energy

C mass

D momentum

Your answer A

[1]

3 Which of these statements about metals is **not** correct?

A They have a high number density of charge carriers.

B They have directional bonds between the metal ions.

C They have mobile dislocations.

D Pure metals are usually ductile.

Your answer B

[1]

© OCR 2018

4 A student blows across the open top of an empty bottle.

Which diagram represents a standing wave that can be produced in the air in the bottle?

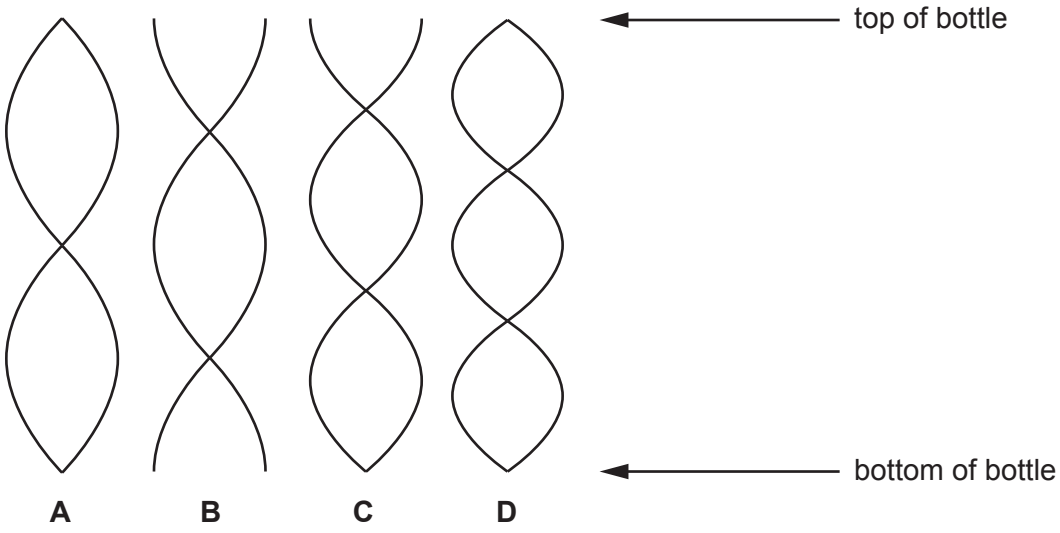

Your answer C

[1]

5 Monochromatic light passes through 3 closely spaced parallel slits at a point. A maximum is produced at a point on a distant screen where the phase difference between light from successive slits is π radians.

Which phasor diagram represents the constructive interference at this point?

A

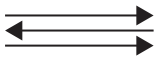

B

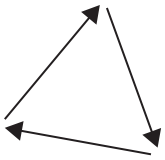

C

D

Your answer A

[1]

© OCR 2018

stemup.co.uk

6 Light can be modelled as a wave or as particles (photons).

Which one of these phenomena can **only** be explained if light is made of photons?

A diffraction

B photoelectric effect

C polarisation

D reflection

Your answer B

[1]

7 Here is a velocity-time graph for a car.

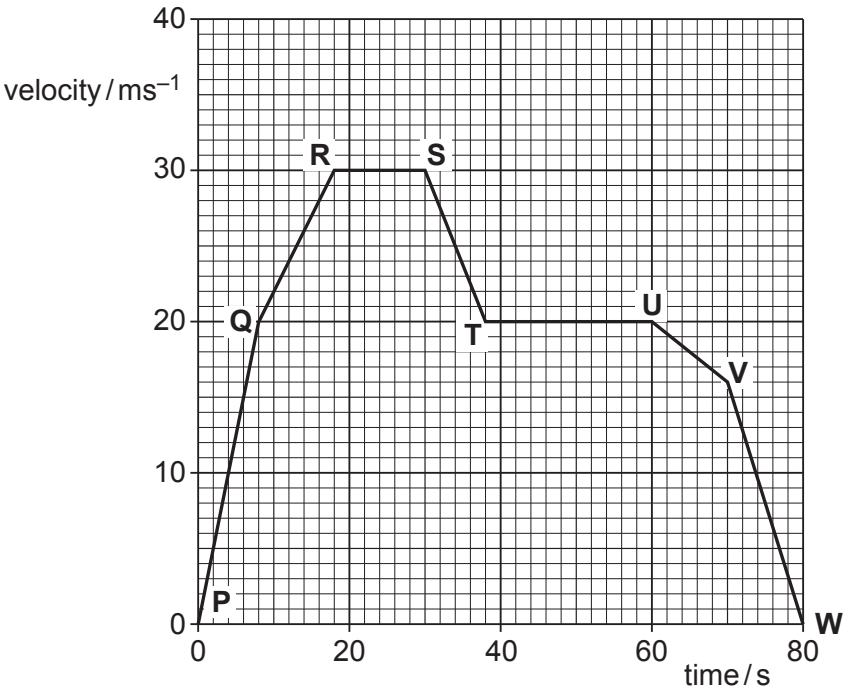

Between which points does the car have the largest acceleration?

A **P** and **Q**

B **Q** and **R**

C **S** and **T**

D **V** and **W**

Your answer A

[1]

© OCR 2018

8 An object falls freely from rest.

Which graph represents distance fallen (y-axis) against time (x-axis)?

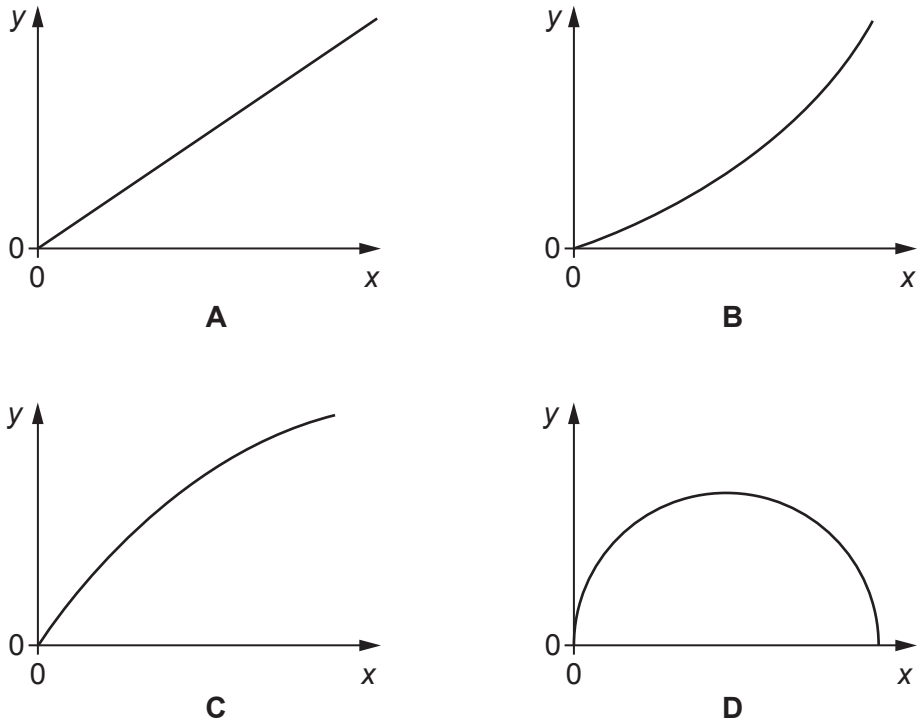

Your answer B

[1]

9 There is a current of 5.0 mA in a 250 Ω resistor for 40 minutes.

How much energy is dissipated in the resistor?

A 2.5×10^{-6} J

B 1.5×10^{-4} J

C 0.25 J

D 15 J

Your answer D

[1]

© OCR 2018

stemup.co.uk

10 Light of wavelength 650 nm is incident at right angles on a diffraction grating with 300 lines per mm.

What is the angle of the third-order maximum?

A 4°

B 11°

C 34°

D 36°

Your answer D

[1]

11 The oscilloscope trace shows the variation in p.d of a signal. The time base of the oscilloscope is set at 0.25 ms cm^{-1}.

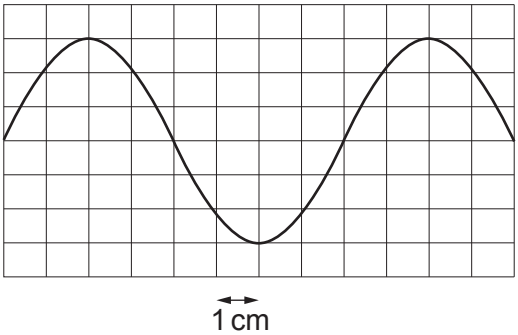

What is the frequency of the signal?

A 333 Hz

B 500 Hz

C 1000 Hz

D 5000 Hz

Your answer B

[1]

© OCR 2018

12 A converging lens produces a focused image at a distance of 0.40 m from the lens. The magnification of the image is 2.0.

What is the power of the lens?

A 0.13 D

B 0.20 D

C 5.0 D

D 7.5 D

Your answer D

[1]

13 The power of a beam of light is 3.5 mW. The wavelength is 445 nm.

How many photons are emitted each second?

A 8×10^{15}

B 8×10^{18}

C 8×10^{21}

D 8×10^{24}

Your answer A

[1]

14 A ball of mass 0.12 kg falls vertically from rest and bounces. The collision with the ground is **elastic**, so kinetic energy is conserved. The duration of the collision is 0.040 s, and the ball leaves the ground with a speed of $10\,\mathrm{m\,s^{-1}}$.

What is the average resultant force on the ball while it is in contact with the ground?

A 0 N

B 1.2 N

C 30 N

D 60 N

Your answer D

[1]

© OCR 2018

stemup.co.uk

15 A force vector, F, is resolved into a vertical component F_y and a horizontal component F_x. The diagram is not to scale.

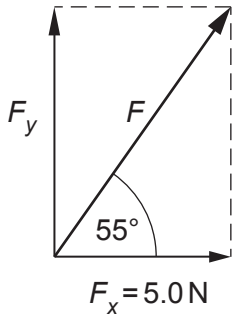

What is the magnitude of F_y?

A 2.9 N

B 3.5 N

C 7.1 N

D 8.7 N

Your answer C

[1]

16 Two wires of the same material have the dimensions shown in the diagram.

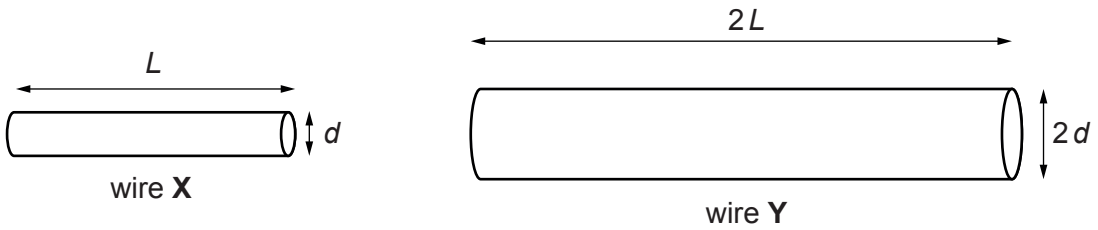

What is the ratio $\dfrac{\text{conductance of wire } \mathbf{X}}{\text{conductance of wire } \mathbf{Y}}$?

A $\frac{1}{2}$

B 1

C $\sqrt{2}$

D 2

Your answer A

[1]

© OCR 2018

17 The de Broglie wavelength of an electron with kinetic energy 900 eV is 4.1×10^{-11} m. What is the wavelength of an electron with kinetic energy 450 eV?

A 2.0×10^{-11} m

B 2.9×10^{-11} m

C 5.8×10^{-11} m

D 8.2×10^{-11} m

Your answer C

[1]

18 This experiment produces an interference pattern on the screen.

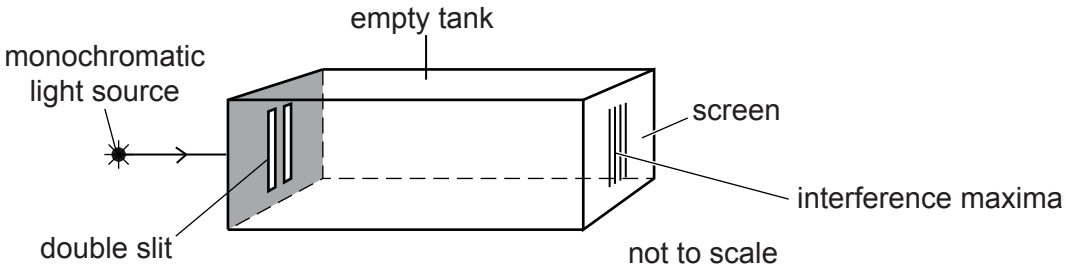

The tank is filled with water, and the maxima become closer together. Which statement correctly explains this observation in terms of the behaviour of light inside the tank?

A The refractive index of the water is lower than that of air.

B The wavelength of the light has decreased.

C The time taken for the light to travel from the slits to the screen has decreased.

D The light waves from the slits are no longer coherent.

Your answer B

[1]

© OCR 2018

stemup.co.uk

The following information is for use in questions **19** and **20**.

Two moving objects, **X** and **Y** collide and then move off together.

X: mass = 2.0 kg
speed = 3.0 m s^{-1}

Y: mass = 1.0 kg
speed = 3.0 m s^{-1}

19 What is the total initial kinetic energy (E_k) and momentum (p) of **X** and **Y**?

	total initial E_k	**total initial p**
A	4.5 J	3 N s
B	4.5 J	9 N s
C	13.5 J	3 N s
D	13.5 J	9 N s

Your answer C

[1]

20 What is the total final kinetic energy (E_k) and momentum (p) of **X** and **Y**, as they move off together?

	total final E_k	**total final p**
A	1.5 J	3 N s
B	1.5 J	9 N s
C	4.5 J	3 N s
D	4.5 J	9 N s

Your answer A

[1]

© OCR 2018

SECTION B

21 Fig. 21 shows a ray of orange light being refracted at an air-water boundary.

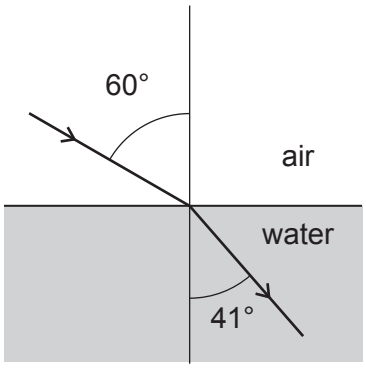

Fig. 21

(a) Show that the refractive index n of the water is less than 1.4 using the angles shown on Fig. 21.

$n = \sin i / \sin r = \sin 60° / \sin 41°$

$n = 0.866 \div 0.656 = 1.32$, which is less than 1.4

n = ...1.32..... **[2]**

(b) The refractive index of water for violet light is 0.02 more than the refractive index for the orange light calculated in **(a)**.
State and explain any changes in refraction when violet light enters water at the same angle of incidence of 60°.

The violet light is refracted more; it bends further towards the normal, so its angle of refraction is slightly less than 41° (about 40°). This is because violet light slows down more than orange light on entering the water (n is larger, 1.34).

..... **[2]**

© OCR 2018

stemup.co.uk

22 Tom runs on the circular track of radius 24 m shown in Fig. 22. He starts at point **X** and stops at point **Y**, which is one-quarter of the way around the track.

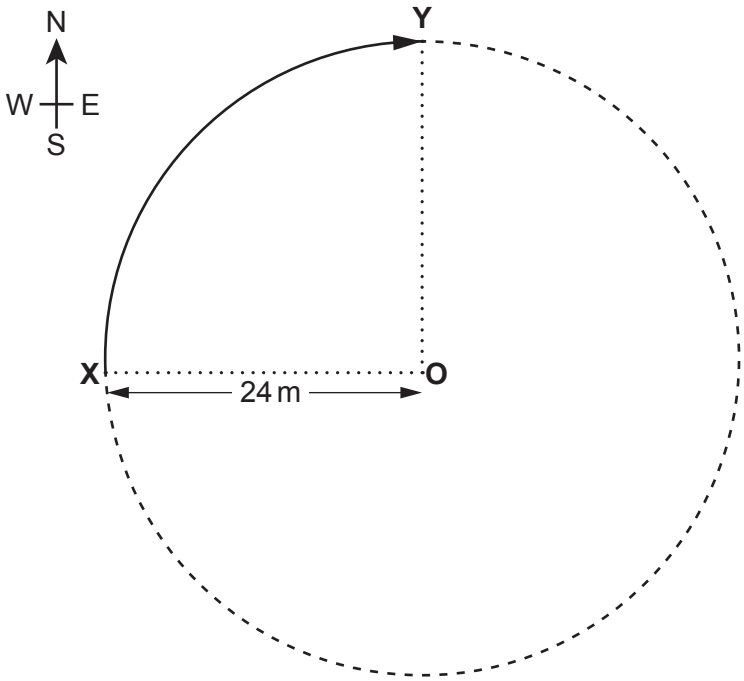

Fig. 22

Calculate Tom's **displacement** from **X** to **Y**. Show your working.

displacement is the straight line XY (hypotenuse of triangle XOY)

$XY^2 = 24^2 + 24^2 = 1152$

$XY = \sqrt{1152} = 33.9$ *m*

direction: Y is north and east of X by equal amounts, so 45°

magnitude .....*34 (33.9)*.....m

direction .....*N 45° E (north-east)*.....

[3]

© OCR 2018

23 Forces can be resolved into components.

(a) Fig. 23 shows a weight vector *W* acting on a climber on an ice slope.
The slope is at 50° to the horizontal.

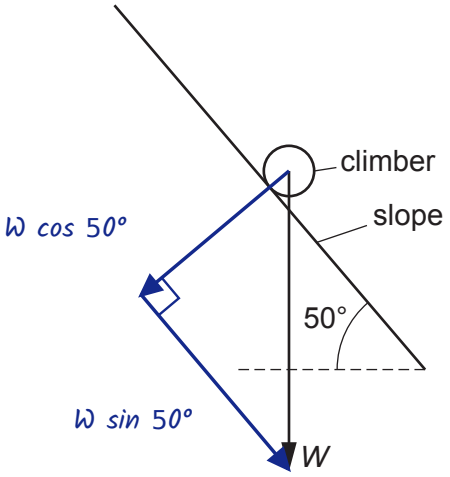

Fig. 23

Add to Fig. 23 two vector arrows to show the components of *W*, parallel to and perpendicular to the slope.

Your diagram should show that the components add up to make the *W* vector. **[1]**

(b) The climber of weight *W* = 600 N is held in equilibrium by a rope parallel to the slope.

Calculate the magnitude of the tension in the rope.

in equilibrium, tension balances the component of W along the slope

$T = W \sin 50° = 600 \times \sin 50°$

$T = 460$ N (459.6 N)

magnitude of tension = ...460..... N **[2]**

© OCR 2018

stemup.co.uk

24 A sound system records signal frequencies from 200 Hz up to 11.5 kHz.

The sound is to be digitally sampled.

(a) State the minimum rate of sampling that should be used.

minimum rate = 2 × highest frequency = 2 × 11 500 Hz

minimum sampling rate = ...23 000..... Hz **[1]**

(b) In this system the $\frac{\text{total signal variation (including noise)}}{\text{noise variation}} = 3000$.

Calculate the number of bits that should be used per sample for this system.

number of bits $n = \log_2(3000) = \log 3000 \div \log 2 = 11.6$

must be a whole number: $2^{11} = 2048 < 3000 < 2^{12} = 4096$

so $n = 12$ bits

number = ...12..... bits **[2]**

© OCR 2018

25 Fig. 25.1 shows a transmission electron microscope (TEM) image of a metal from the year 2010 with a scale marker of 1 nm.

Fig. 25.2 shows the approximate resolution of TEM technology against time.

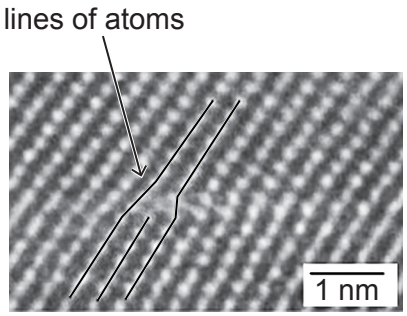

Fig. 25.1

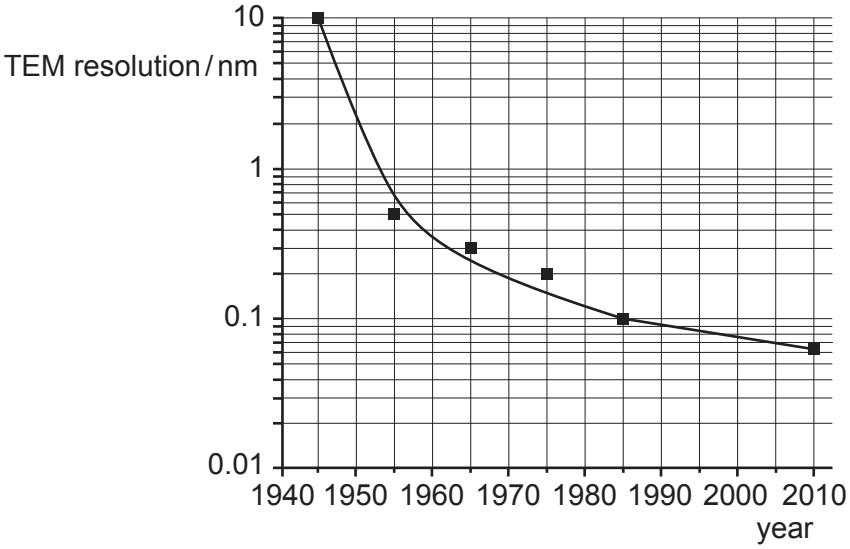

Fig. 25.2

(a) Name the feature represented by the lines of atoms added to the image in Fig. 25.1.

name of feature .....(edge) dislocation..... **[1]**

(b) Using Fig. 25.2 determine the factor by which TEM resolution has improved between the years 1945 and 2010.

1945: resolution = 10 nm; 2010: resolution = 0.06 nm

factor = 10 ÷ 0.06 = 167

factor = ...167..... **[1]**

© OCR 2018

stemup.co.uk

26 This question applies Newton's laws of motion to a test flight of an aircraft.

The test flight starts with straight level flight at constant velocity. Fig. 26 shows the four initial forces acting on the aircraft.

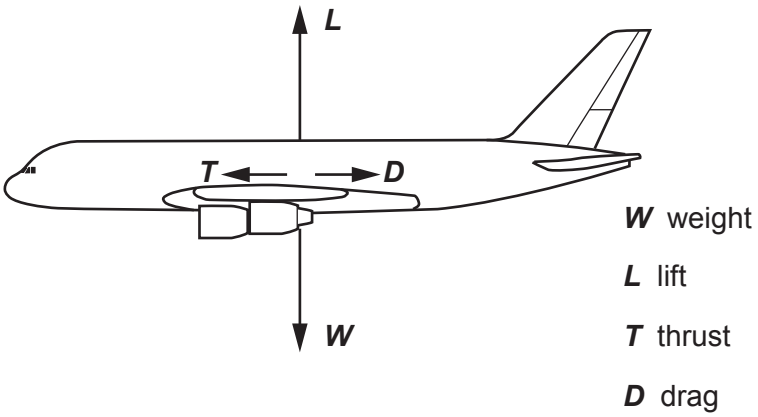

Fig. 26

The lift force *L* depends on the velocity *v* of the aircraft – as *v* increases, *L* also increases.

(a) One student has an incorrect interpretation of this diagram.

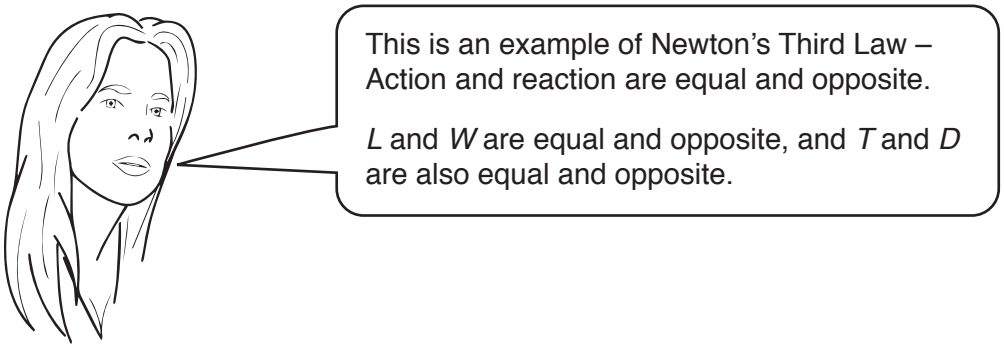

Using **one** of the two pairs of forces she mentions (*L* and *W* **or** *T* and *D*), explain why she is wrong.

Newton's third law pairs act on different bodies and are the same type of force.

L and W are equal and opposite but both act on the aircraft, and they are different types: W is the gravitational pull of the Earth and L is due to air flowing over the wings. **[2]**

© OCR 2018

(b) The engines are stopped and the thrust T becomes zero. The aircraft continues flying.

Explain, using Newton's Laws, how the aircraft will move once the engines have been stopped.

The aircraft slows down (decelerates): with T = 0 the drag is unbalanced,

so there is a resultant force backwards, against the motion (N2).

As v falls, L falls below W, so there is also a resultant downward force and

the aircraft loses height (falls).

..... **[2]**

(c) The mass of the aircraft when its engines are stopped is 4.0×10^5 kg and the drag D is 1.2 MN.

Calculate the deceleration of the aircraft just after the engines are stopped.

$a = F / m = 1.2 \times 10^6 \div 4.0 \times 10^5$

$a = 3.0 \text{ m s}^{-2}$

deceleration = ...3.0..... m s^{-2} **[1]**

© OCR 2018

stemup.co.uk

SECTION C

27 The Cassini-Huygens spacecraft took images of Saturn's moon Enceladus when the spacecraft was about 6000 km from Enceladus. One such image is shown in Fig. 27.1.

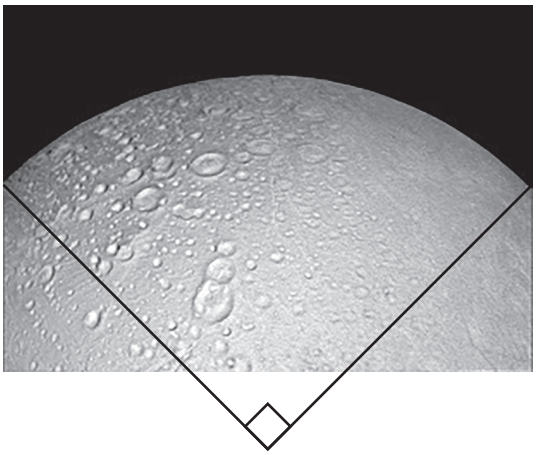

Fig. 27.1

(a) **(i)** The image is 1024 × 711 pixels. The original data transmitted for this image was 5.8 Mbits.

Calculate the number of bits per pixel in the original data.

number of pixels = 1024 × 711 = 7.28×10^5

bits per pixel = $5.8 \times 10^6 \div 7.28 \times 10^5$ = 7.97

so 8 bits per pixel

bits per pixel = ...8..... **[1]**

(ii) The 5.8 Mbits was downloaded to an Earth receiver at a rate of 110 kbit s^{-1}.
Calculate the time taken to download this data.

t = *information* ÷ *rate* = $5.8 \times 10^6 \div 110 \times 10^3$

t = 52.7 *s*

time taken = ...53..... s **[1]**

© OCR 2018

(b) **(i)** Two radii of the moon Enceladus have been added to Fig. 27.1. The resolution of the image is 330 m per pixel.
Show that the diameter of Enceladus is less than 500 km.

measured on Fig. 27.1: radius = 4.95 cm; width of image = 7.0 cm

width of image = 1024 pixels

radius = (4.95 ÷ 7.0) × 1024 = 724 pixels

R = 724 × 330 m = 2.39 × 10^5 m = 239 km

D = 2R = 2 × 239 km = 478 km

478 km < 500 km, so the diameter is less than 500 km

[3]

(ii) The image was taken with a sensor of square pixels of width 5 μm. Fig. 27.2 shows the formation of this image (not to scale).

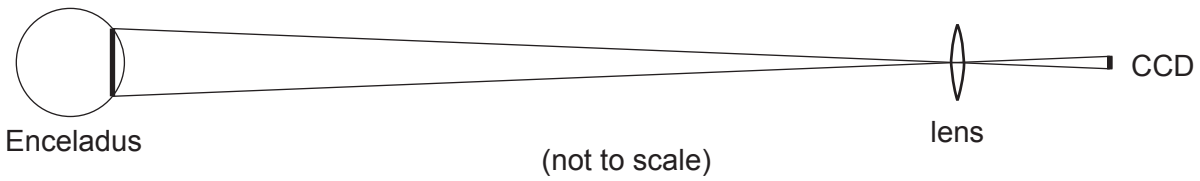

Fig. 27.2

Estimate the focal length of the camera lens that produced the image using data from earlier in the question.
Make your method clear.

similar triangles: f ÷ (pixel width) = distance to moon ÷ (width per pixel)

each 5 μm pixel on the CCD images 330 m of the moon at 6.0 × 10^6 m

f = 5 × 10^{-6} × 6.0 × 10^6 ÷ 330

f = 0.091 m (0.0909 m)

focal length = ...*0.091*..... m **[2]**

© OCR 2018

stemup.co.uk

28 This question is about a high-tensile steel cable used by a tugboat to tow large ships. Fig. 28 shows the force F against extension x graph for the steel cable up to the breaking point.

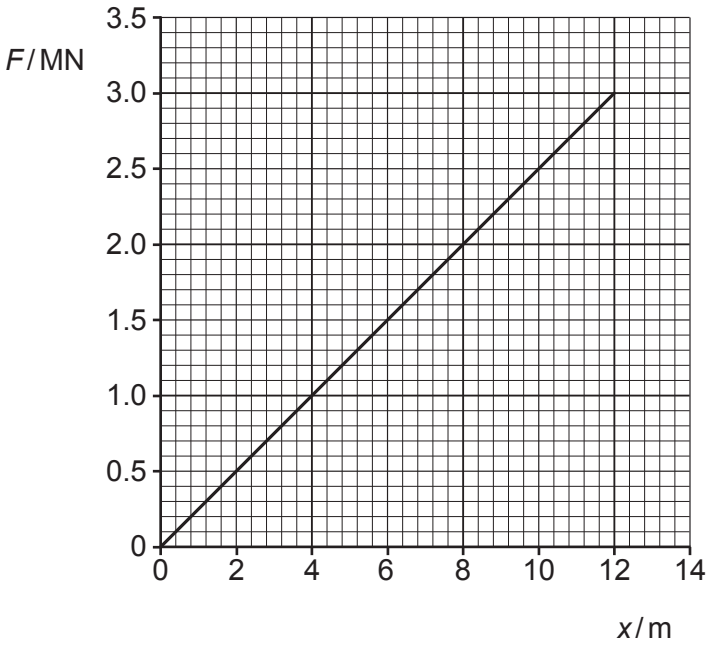

Fig. 28

(a) **(i)** Calculate the force constant $k = \frac{F}{x}$ in $MN\,m^{-1}$ for this cable.

k = F / x = 3.0 MN ÷ 12 m (top point of the line)

force constant k = ...0.25..... $MN\,m^{-1}$ **[1]**

(ii) Use algebraic reasoning to show that the force constant k is related to the Young modulus E of the steel by the equation:

$$k = \frac{E\,A}{L}$$

where A is the cross-sectional area of cable and L is the length of cable.

E = stress ÷ strain = (F / A) ÷ (x / L) = FL / Ax

rearranging: F / x = EA / L

and k = F / x, so k = EA / L

[1]

© OCR 2018

(iii) For the cable in the graph, $E = 2.1 \times 10^{11}$ Pa and $A = 1.0 \times 10^{-3}\,m^2$.

Calculate the length L of the cable used.

$k = EA / L$, so $L = EA / k$

$L = 2.1 \times 10^{11} \times 1.0 \times 10^{-3} \div 0.25 \times 10^{6}$

$L = 840$ m

L = ...840..... m **[2]**

(b) (i) Use Fig. 28 to show that the elastic potential energy stored by the cable at its breaking point is less than 20 MJ.

energy stored = area under the F against x graph = ½Fx

$= ½ \times 3.0 \times 10^{6} \times 12 = 1.8 \times 10^{7}$ J = 18 MJ

18 MJ < 20 MJ

[1]

(ii) When a cable breaks, most of its stored elastic energy is transferred to kinetic energy. Estimate the speed that the cable would reach, assuming all its mass moves at the same speed.

density, $\rho = \dfrac{\text{mass}}{\text{volume}} = 7.9 \times 10^{3}\,kg\,m^{-3}$ for steel

mass $m = \rho AL = 7.9 \times 10^{3} \times 1.0 \times 10^{-3} \times 840 = 6640$ kg

elastic energy transferred to kinetic energy: $½mv^2 = 18 \times 10^{6}$ J

$v^2 = 2 \times 18 \times 10^{6} \div (7.9 \times 10^{3} \times 1.0 \times 10^{-3} \times 840)$

$v^2 = 5420$

$v = 74\ m\ s^{-1}$

speed = ...74..... $m\,s^{-1}$ **[3]**

© OCR 2018

stemup.co.uk

29 This question is about a temperature sensor.

It contains a thermistor in a potential divider circuit as shown in Fig. 29.1.
Fig. 29.2 shows the output p.d. V against temperature θ graph for the sensor.

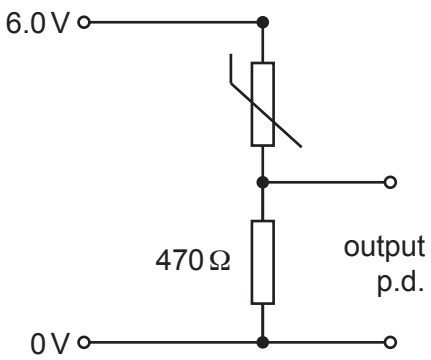

Fig. 29.1

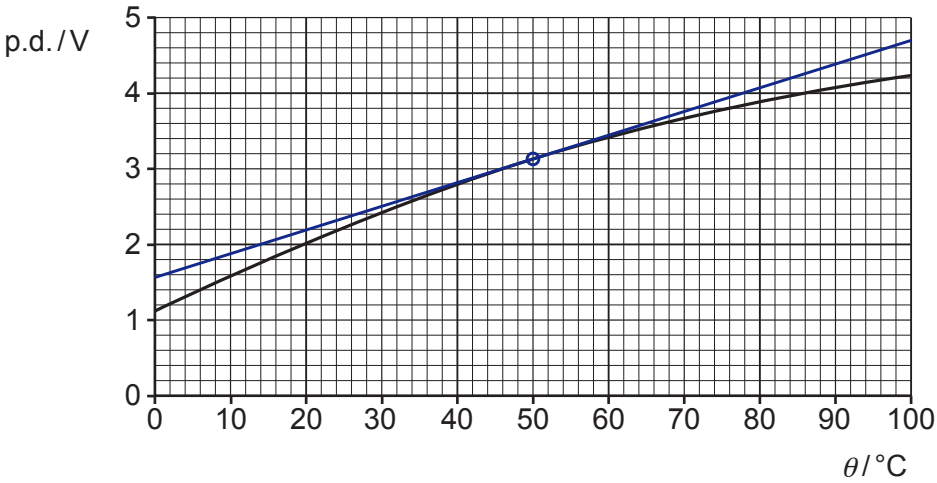

Fig. 29.2

(a) State suitable apparatus (other than indicated in Fig. 29.1) and describe how to use it to obtain the calibration graph shown in Fig. 29.2.
You may wish to include a labelled diagram in your answer.

Apparatus: a digital voltmeter across the output (the 470 Ω resistor), a thermometer, a beaker of water with a stirrer, a heater and crushed ice.
Put the thermistor in melting crushed ice and water next to the thermometer bulb: this is the lower fixed point, 0 °C. Record V.
Heat the water slowly, recording V at regular intervals, e.g. every 10 °C, up to boiling water at 100 °C.
Stop heating and stir before each reading so thermistor and thermometer are at the same temperature; read V and θ at the same time; repeat and average, then plot V against θ.

..... **[4]**

© OCR 2018

(b) The p.d. across the terminals of the power supply is 6.0 V and the resistance of the fixed resistor in the potential divider is 470 Ω.

Calculate the resistance of the thermistor at 46 °C. Make your reasoning clear.

from Fig. 29.2, at 46 °C the output p.d. = 3.0 V

this is half of 6.0 V, so p.d. across thermistor = 6.0 − 3.0 = 3.0 V

equal p.d.s in series means equal resistances, so R = 470 Ω

resistance = ...470..... Ω **[2]**

(c) **(i)** The sensitivity of the sensor is the ratio $\frac{\text{change of output p.d.}}{\text{change in temperature}}$.

Describe how the sensitivity of the sensor varies between 0 °C and 100 °C. Explain your reasoning.

Sensitivity is the gradient of the V against θ graph. The gradient is nearly constant up to about 30 °C, then decreases steadily, so the sensitivity decreases as θ rises to 100 °C.

..... **[2]**

(ii) Use Fig. 29.2 to estimate the sensitivity of the sensor at 50 °C.
Make your method clear.

draw a tangent to the curve at 50 °C (on Fig. 29.2)

tangent passes through (0 °C, 1.6 V) and (100 °C, 4.7 V)

gradient = (4.7 − 1.6) ÷ (100 − 0) = 0.031 V °C^{-1}

sensitivity = ...0.031..... V °C^{-1} **[3]**

© OCR 2018

stemup.co.uk

(d) The readings of p.d. for Fig. 29.2 were taken with a digital voltmeter.
Five consecutive values were recorded at each temperature.
The calculated mean output p.d. data for five of the temperatures are shown in the table with calculated uncertainty values.

temperature / °C		0	20	40	60	100
output p.d. / V	mean	1.127	2.041	2.795	3.389	4.097
	uncertainty	±0.003	±0.024	±0.020	±0.012	±0.003

Analyse and comment on the uncertainties in the data in the table.
Suggest a cause of the limitations in the data and what might be done to improve the procedure or apparatus used in the calibration to avoid the limitations.

Uncertainties (half the range of five readings) are smallest, ±0.003 V, at 0 °C and 100 °C and larger, up to ±0.024 V, in between.

% uncertainty: 0 °C, 0.003/1.127 = 0.27%; 100 °C, 0.07%; 20 °C, 0.024/2.041 = 1.2%, much larger in between.

Cause: 0 °C and 100 °C are fixed points (melting ice, boiling water) where θ is stable; elsewhere θ drifts as it is heated, with the thermistor still warming during the readings.

Improve: stop heating, stir and wait for the thermistor to reach the water temperature, or use a thermostatic water bath. **[4]**

END OF QUESTION PAPER

© OCR 2018

ADDITIONAL ANSWER SPACE

If additional space is required, you should use the following lined page(s). The question number(s) must be clearly shown in the margin(s).

© OCR 2018

© OCR 2018

© OCR 2018

OCR
Oxford Cambridge and RSA

Copyright Information

OCR is committed to seeking permission to reproduce all third-party content that it uses in its assessment materials. OCR has attempted to identify and contact all copyright holders whose work is used in this paper. To avoid the issue of disclosure of answer-related information to candidates, all copyright acknowledgements are reproduced in the OCR Copyright Acknowledgements Booklet. This is produced for each series of examinations and is freely available to download from our public website (www.ocr.org.uk) after the live examination series.

If OCR has unwittingly failed to correctly acknowledge or clear any third-party content in this assessment material, OCR will be happy to correct its mistake at the earliest possible opportunity.

For queries or further information please contact the Copyright Team, First Floor, 9 Hills Road, Cambridge CB2 1GE.

OCR is part of the Cambridge Assessment Group; Cambridge Assessment is the brand name of University of Cambridge Local Examinations Syndicate (UCLES), which is itself a department of the University of Cambridge.

© OCR 2018