Oxford Cambridge and RSA

Wednesday 14 May 2025 – Morning

AS Level Physics A

H156/01 Breadth in physics

Time allowed: 1 hour 30 minutes

You must have:
- the Data, Formulae and Relationships Booklet

You can use:
- a scientific or graphical calculator
- a ruler (cm/mm)
- an HB pencil

Please write clearly in black ink. **Do not write in the barcodes.**

Centre number | | | | | | Candidate number | | | | |

First name(s) _____

Last name _____

INSTRUCTIONS
- Use black ink. You can use an HB pencil, but only for graphs and diagrams.
- Write your answer to each question in the space provided. If you need extra space use the lined pages at the end of this booklet. The question numbers must be clearly shown.
- Answer **all** the questions.
- Where appropriate, your answer should be supported with working. Marks might be given for using a correct method, even if your answer is wrong.

INFORMATION
- The total mark for this paper is **70**.
- The marks for each question are shown in brackets **[ ]**.
- This document has **24** pages.

ADVICE
- Read each question carefully before you start your answer.

© OCR 2025 [601/4742/8]
DC (DE/SW) 356248/3
OCR is an exempt Charity

Section A

You should spend a maximum of **25 minutes** on this section.

Write your answer to each question in the box provided.

1 A metal wire has cross-sectional area of $4.0 \times 10^{-6}\,m^2$. The number density of charge carriers in the metal is $8.5 \times 10^{28}\,m^{-3}$. The current in the wire is 1.5 A.

Calculate the mean drift velocity of the charge carriers.

A $4.4 \times 10^{-6}\,m\,s^{-1}$

B $2.8 \times 10^{-5}\,m\,s^{-1}$

C $3.6 \times 10^{-4}\,m\,s^{-1}$

D $8.2 \times 10^{-4}\,m\,s^{-1}$

Your answer ☐ **[1]**

2 A beam of length 4.0 m is pivoted at its centre.

Two equal and opposite forces of magnitude 2100 N are applied to opposite ends of the beam, as shown.

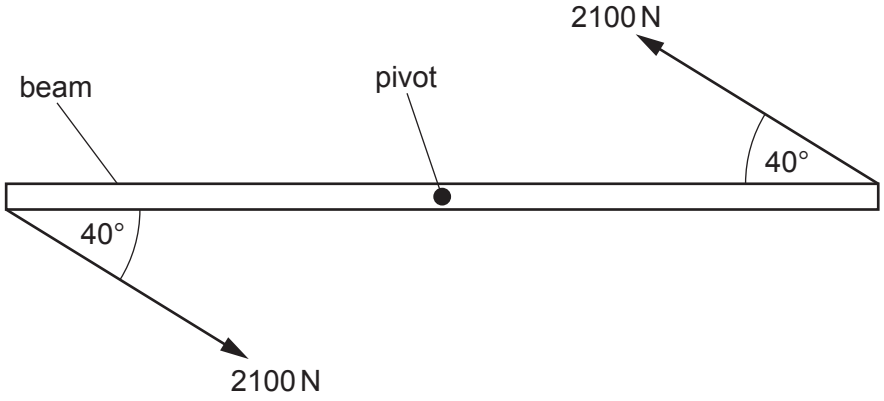

What is the torque due to the two forces shown?

A 2700 N m

B 3200 N m

C 5400 N m

D 6400 N m

Your answer ☐ **[1]**

© OCR 2025

3 Four resistors, each of resistance 10 Ω, are connected in a network, as shown.

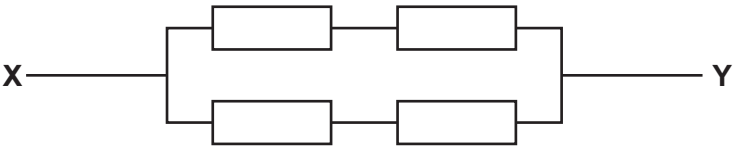

What is the total resistance between points **X** and **Y**?

A 2.5 Ω

B 10 Ω

C 25 Ω

D 40 Ω

Your answer ☐ **[1]**

4 Which is a possible wavelength of ultraviolet radiation?

A 10^{-6} m

B 10^{-8} m

C 10^{-10} m

D 10^{-12} m

Your answer ☐ **[1]**

5 The diagram shows a sound wave in an open pipe of length 1.4 m.

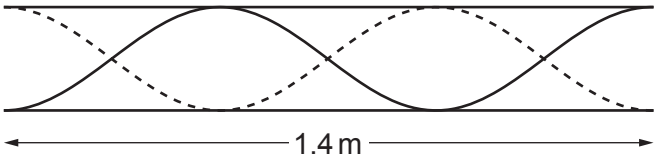

The speed of the wave is 330 m s^{-1}.

Calculate the frequency of the wave.

A 160 Hz

B 240 Hz

C 350 Hz

D 710 Hz

Your answer ☐ **[1]**

© OCR 2025

6 Electromagnetic radiation with frequency of 2.2×10^{15} Hz is incident on a clean metal surface. The work function of the metal is 3.7 eV. Photoelectrons are emitted from the surface of the metal.

Calculate the maximum kinetic energy of the photoelectrons.

A 5.9×10^{-19} J

B 8.7×10^{-19} J

C 1.5×10^{-18} J

D 2.1×10^{-18} J

Your answer ☐ **[1]**

7 The velocity of an electron is 5% of the speed of light in a vacuum.

Calculate the wavelength of the electron.

A 1.3×10^{-15} m

B 2.6×10^{-14} m

C 2.4×10^{-12} m

D 4.9×10^{-11} m

Your answer ☐ **[1]**

8 The stress-strain graphs for four materials **A**, **B**, **C** and **D** are shown.

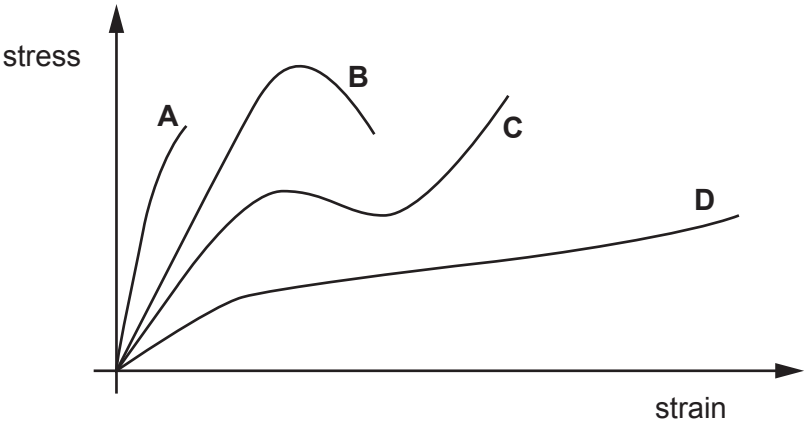

Which material has the greatest ultimate tensile strength?

Your answer ☐ **[1]**

© OCR 2025

9 The Young modulus of a material is 2.1×10^9 Pa.

What is 2.1×10^9 Pa numerically equal to?

A 2.1 GPa

B 2.1 kPa

C 2.1 MPa

D 2.1 TPa

Your answer ☐ **[1]**

10 An object floats in a liquid. A force of upthrust acts on the object.

Which quantity does **not** affect the magnitude of the upthrust?

A density of the liquid

B gravitational field strength

C mass of the object

D volume of the object

Your answer ☐ **[1]**

11 An object, initially at rest, falls from a height of 4.5 m above the ground.

Assume that air resistance is negligible.

Calculate the speed of the object when it is 2.5 m above the ground.

A $4.4\,\mathrm{m\,s^{-1}}$

B $6.3\,\mathrm{m\,s^{-1}}$

C $7.0\,\mathrm{m\,s^{-1}}$

D $9.4\,\mathrm{m\,s^{-1}}$

Your answer ☐ **[1]**

© OCR 2025

12 Electromagnetic radiation is incident on the surface of a clean metal sheet. The frequency of the radiation is greater than the threshold frequency of the metal. Photoelectrons are released from the surface.

Which of the following quantities affects the rate of emission of photoelectrons?

A the intensity of the radiation

B the thickness of the metal sheet

C the threshold frequency of the metal

D the work function of the metal

Your answer ☐ **[1]**

13 A free-body force diagram is shown below. The system is in equilibrium.

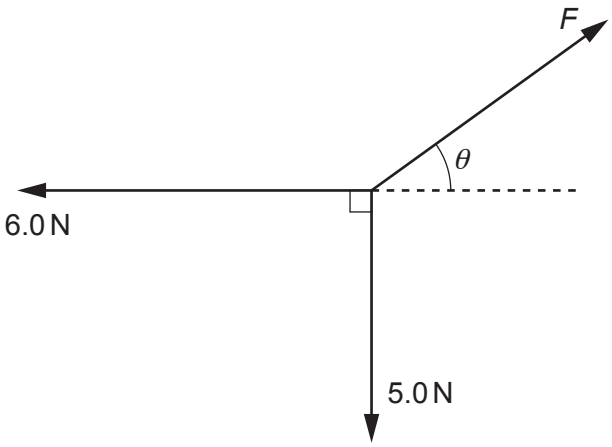

Calculate the magnitude of the force F and the angle θ.

	F / N	θ / °
A	7.8	40
B	7.8	50
C	11	40
D	11	50

Your answer ☐ **[1]**

© OCR 2025

14 Two identical particles are travelling at the same speed v in opposite directions.

They collide head on. The collision is elastic.

What happens to the two particles after the collision?

A One particle stops and the other rebounds at speed $2v$.

B They move off together at speed v.

C They rebound in opposite directions, each at speed $\frac{v}{2}$.

D They rebound in opposite directions, each at speed v.

Your answer ☐ **[1]**

15 The mass of a cube of a material is measured to a percentage uncertainty of 8%.

The length of each side of the cube is measured to a percentage uncertainty of 2%.

Calculate the total percentage uncertainty in the calculated density of the material.

A 6%

B 10%

C 14%

D 16%

Your answer ☐ **[1]**

© OCR 2025

16 A ball is thrown upwards from a height 1 m above the ground. It rises to maximum height, then falls to the ground and bounces once, rises and falls back down to the ground.

The velocity-time graph for this motion is shown below.

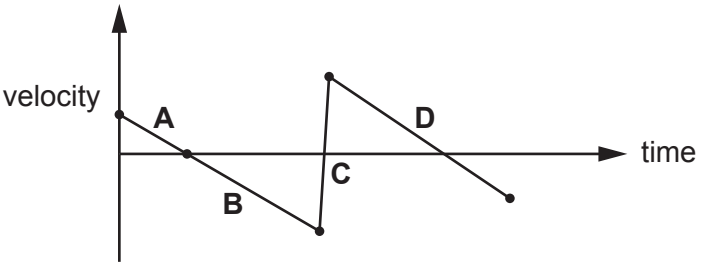

During which section of the graph does the ball experience the greatest rate of change of momentum?

Your answer ☐ **[1]**

17 A ball is hit by a racket. The graph shows how the force on the ball changes whilst the racket is in contact with the ball.

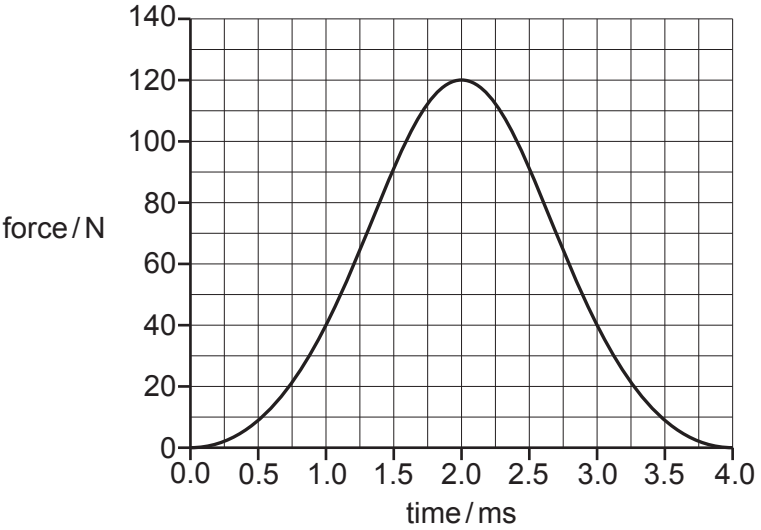

Which is the best estimate of the total impulse on the ball?

A 0.20 N s

B 0.24 N s

C 0.48 N s

D 0.50 N s

Your answer ☐ **[1]**

© OCR 2025

18 A cell with an e.m.f. of 1.50 V and internal resistance of 0.50 Ω is connected to a resistor of resistance 20 Ω. An ammeter is connected in series.

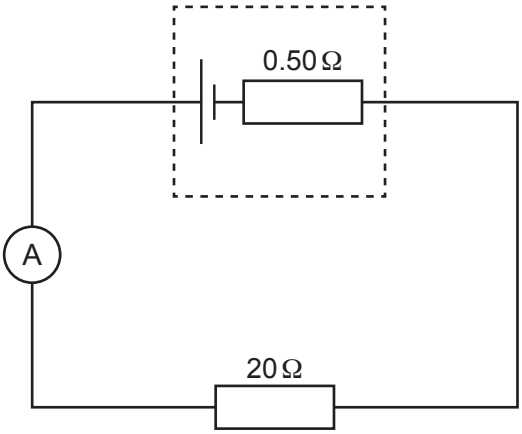

Calculate the reading on the ammeter.

A 30 mA

B 31 mA

C 73 mA

D 75 mA

Your answer ☐ **[1]**

19 A current flows through a resistor.

Which is a correct definition for the power dissipated in the resistor?

A energy transferred from electrical energy to other forms of energy per unit charge

B energy transferred from electrical energy to other forms of energy per unit time

C energy transferred from other forms of energy to electrical energy per unit charge

D energy transferred from other forms of energy to electrical energy per unit time

Your answer ☐ **[1]**

© OCR 2025

20 The amplitude of a wave is doubled.

How does the intensity of the wave change?

A decrease by factor of 4

B decrease by factor of 2

C increase by factor of 2

D increase by factor of 4

Your answer ☐ **[1]**

© OCR 2025

BLANK PAGE

DO NOT WRITE ON THIS PAGE

© OCR 2025

Section B

21 A student stands on a set of scales while travelling in a lift. The scales are calibrated in newtons. When the lift is stationary the scales read 700 N.

The diagram shows the two forces acting on the student, the normal contact force *R* and the weight *W*.

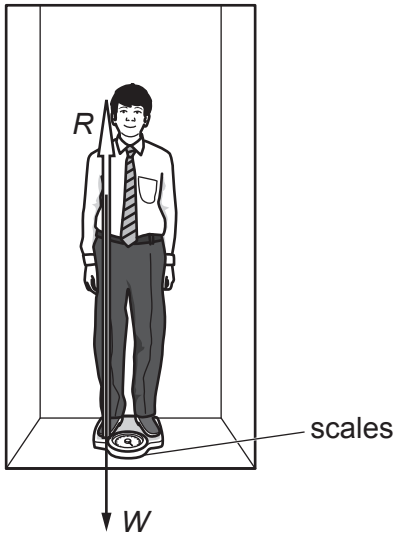

(a) When the lift is stationary, $W = R$. Discuss whether these two forces form a force pair according to Newton's third law.

.....

.....

.....

.....

.....

..... **[3]**

© OCR 2025

(b) The lift accelerates upwards, from rest, with acceleration of $2.4\,\mathrm{m\,s^{-2}}$.

(i) Calculate the expected reading on the scales.

reading on scales = ... N **[3]**

(ii) Calculate the time taken by the lift to reach a height of 8.5 m.

time = ... s **[3]**

(c) The lift moves downwards at a constant speed. The student remains standing on the scales.

State and explain the expected reading on the scales.

.....

.....

.....

..... **[2]**

© OCR 2025

22 A scientist takes measurements to identify a piece of glass.

(a) They measure the refractive index of the glass using the following procedure:

1 Submerge the glass in a clear liquid with a known refractive index.

2 If the glass is not visible when submerged in the liquid, conclude that the refractive index of the glass is equal to the refractive index of the liquid.

3 Otherwise, clean the glass and return to the first step using a liquid with a different refractive index.

(i) Suggest why the scientist must clean the glass in step **3**.

.....

..... **[1]**

(ii) Suggest **one** other factor that the scientist needs to control.

.....

..... **[1]**

(b) The table shows the refractive index *n* for three different types of glass.

Type of glass	**Refractive index, *n***
X	$1.47 < n < 1.49$
Y	$1.49 < n < 1.50$
Z	$1.51 < n < 1.54$

The scientist measures the refractive index of the piece of glass as 1.52 ± 1.5%.

They conclude that the glass is type **Z**.

Evaluate this conclusion.

.....

.....

.....

.....

.....

..... **[3]**

© OCR 2025

(c) A student makes measurements to determine the refractive index of a liquid by measuring the critical angle.

(i) Describe what **critical angle** means.

.....

..... **[1]**

(ii) The student pours liquid into a shallow, semicircular glass dish.

Refraction due to the thin glass walls of the dish can be ignored.

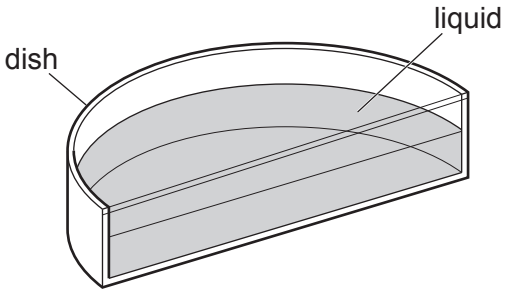

Describe how the student could accurately measure the critical angle using a ray box.

You may draw diagrams to support your answer.

.....

.....

.....

..... **[4]**

(iii) The student measures the critical angle as 42°.

Calculate the refractive index of the liquid.

refractive index = ... **[2]**

© OCR 2025

23 Some information about a microwave oven is shown in the table.

Frequency of microwaves / GHz	2.45
Input voltage / V	230
Input current / A	5
Output power / W	700

(a) Calculate the percentage efficiency of the microwave oven.

percentage efficiency = ... % **[3]**

(b) The microwave oven is used to heat some soup.

The internal energy of the soup needs to increase by 100 kJ to reach the correct temperature for eating.

The soup packet claims that the soup should be heated for at least 3 minutes.

Deduce whether the claim is correct.

[3]

© OCR 2025

(c) The soup packet advises that the soup should be stirred halfway through heating to ensure it is heated evenly.

The microwave oven heats the soup unevenly because stationary waves are formed inside the microwave oven.

(i) Explain how stationary waves are formed inside the microwave oven.

.....

.....

.....

..... **[2]**

(ii) Explain why the formation of stationary waves causes the soup to be heated unevenly.

.....

.....

.....

..... **[2]**

© OCR 2025

24 The figure shows a device used to increase the strength of finger muscles.

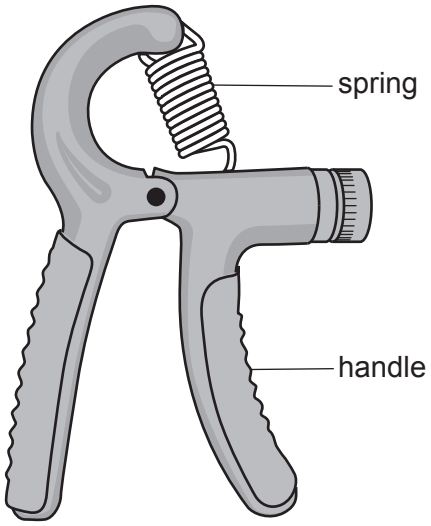

When a force *F* is applied to the handle, the system is maintained in equilibrium by a tension *T* in the spring and a reaction force *R* acting at the pivot.

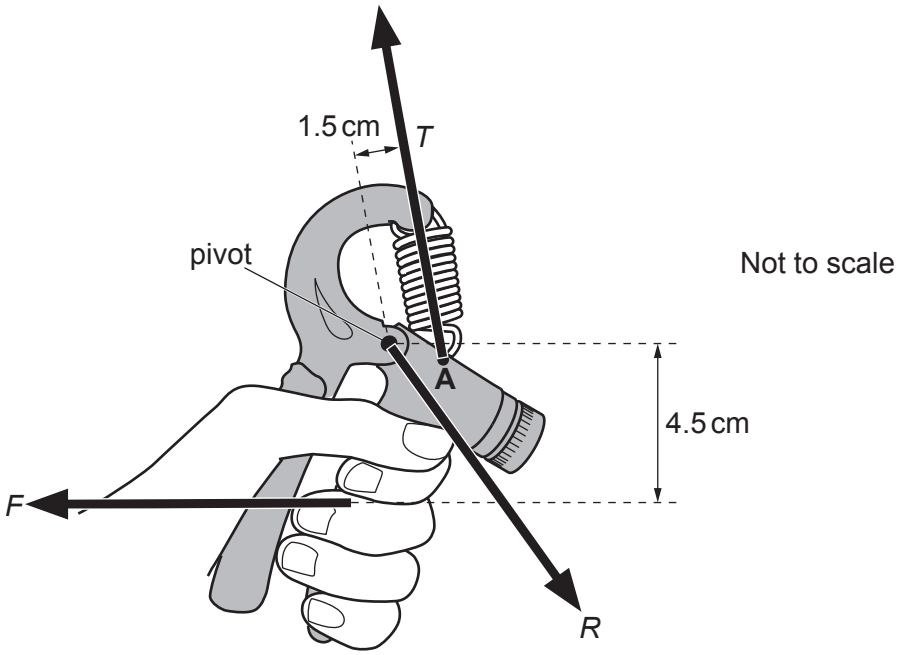

© OCR 2025

(a) State the **principle of moments**.

.....

.....

..... **[2]**

(b) A force F of 340 N is applied to the handle. The spring extends by 12 mm.

The perpendicular distance from F to the pivot is 4.5 cm.

The perpendicular distance from T to the pivot is 1.5 cm.

(i) Show that the force constant k of the spring is approximately 90 000 N m^{-1}.

[3]

(ii) Calculate the elastic potential energy stored in the spring.

elastic potential energy = ... J **[2]**

© OCR 2025

(c) The point of attachment of the spring is moved from **A** to **B**, as shown below.

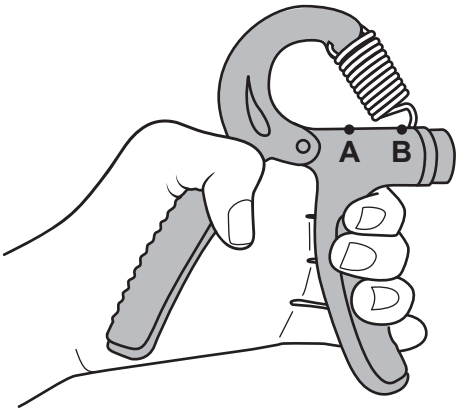

Discuss how the force *F* must change to produce the same extension in the spring.

.....

.....

.....

.....

.....

..... **[3]**

© OCR 2025

25 Electromagnetic waves can be polarised.

(a) Explain what **plane polarised wave** means.

.....

.....

..... **[2]**

(b) A microwave transmitter **T** and receiver **R** are placed facing each other, as shown in the diagram.

When set up as shown in the diagram, **T** and **R** emit and detect plane polarised microwaves with the same polarisation.

A metal grille is inserted between **T** and **R**.

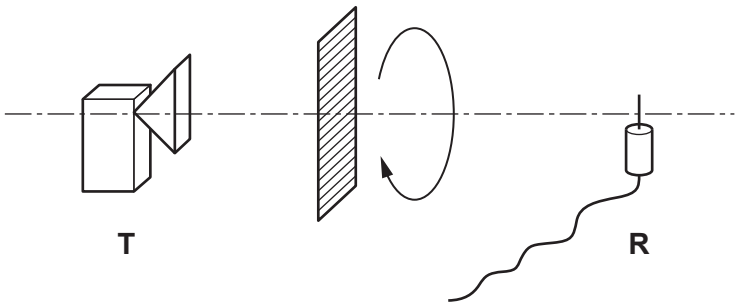

Initially **R** records a maximum intensity.

(i) The grille is then slowly rotated through 360° about the axis joining **T** and **R**.

Sketch a graph to show how the intensity detected by **R** changes as the grille is rotated.

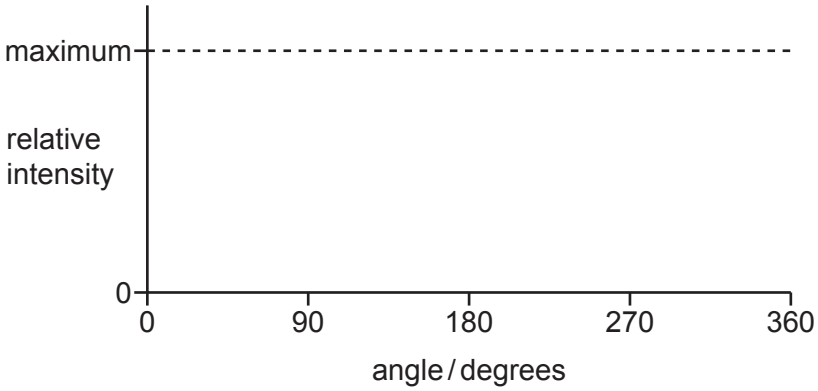

[3]

(ii) **T** is now rotated by 45° about the axis joining **T** and **R**. The grille is returned to its initial position, as shown in the diagram. The procedure described in **(i)** is now repeated.

Suggest and explain, without calculation, how the pattern of intensity detected by **R** will change.

.....

.....

.....

..... **[2]**

END OF QUESTION PAPER

© OCR 2025

EXTRA ANSWER SPACE

If you need extra space use these lined pages. You must write the question numbers clearly in the margin.

© OCR 2025

© OCR 2025

OCR
Oxford Cambridge and RSA

Copyright Information

OCR is committed to seeking permission to reproduce all third-party content that it uses in its assessment materials. OCR has attempted to identify and contact all copyright holders whose work is used in this paper. To avoid the issue of disclosure of answer-related information to candidates, all copyright acknowledgements are reproduced in the OCR Copyright Acknowledgements Booklet. This is produced for each series of examinations and is freely available to download from our public website (www.ocr.org.uk) after the live examination series.

If OCR has unwittingly failed to correctly acknowledge or clear any third-party content in this assessment material, OCR will be happy to correct its mistake at the earliest possible opportunity.

For queries or further information please contact The OCR Copyright Team, The Triangle Building, Shaftesbury Road, Cambridge CB2 8EA.

OCR is part of Cambridge University Press & Assessment, which is itself a department of the University of Cambridge.

© OCR 2025